OCOEE CITY COMMISSION
Ocoee Commission Chambers
1 N. Bluford Avenue
Ocoee, Florida

January 16, 2024 **AGENDA** **6:15 PM**

REGULAR CITY COMMISSION MEETING

- **STATE OF THE CITY - 5:45 PM**

- **CALL TO ORDER**

  Invocation

  Pledge of Allegiance

  Roll Call and Determination of Quorum

- **PRESENTATIONS AND PROCLAMATIONS**

  Ocoee Village Consortium Update on Lakewood Avenue

- **STAFF REPORTS AND AGENDA REVIEW**

- **PUBLIC COMMENTS**

- **CONSENT AGENDA**

  Matters listed under the consent agenda are considered to be routine and will be acted upon by one motion. There will be no separate discussion of these items unless discussion is desired by a member of the commission, in which case the Mayor will instruct the City Clerk to remove that item from the Consent Agenda and such item will be considered separately.

1. Approval of Minutes from the Regular City Commission Meeting held December 5, 2023. **(City Clerk Sibbitt)**
2. Approval of Educational Affiliation Agreements**. (Deputy Fire Chief Van Camp)**
3. Approval of Police Department Body-Worn Camera Expansion. **(Deputy Police Chief McKinstry)**
4. Approval of a Five -Year Warranty Surety and Maintenance, Materials, and Workmanship Agreement for Ocoee Village Center Townhomes. **(Development Engineer Keaton)**
5. Approval of Resolution Relating to Naming a Tract of Land in the Ocoee Crown Point PUD as Public Right-of-Way and Naming the Right-of-Way as Ocoee Crown Point Parkway. **(Development Services Director Rumer)**
6. Approval of Resolution Relating to the City of Ocoee's Pending Legislation to Qualify for Affordable Housing Projects Under the Live Local Act. **(Development Services Director Rumer)**
7. Approval of Change Order No. 1 to Ocoee Action Sports Park Phase 3. **(Parks and Recreation Director Johnson)**
8. Approval to Award Invitation to Bid (ITB) #24-002 W. Oakland Ave Reconstruction. **(Procurement Manager Tolbert)**

9. Approval of 2023-2024 Budget Vehicle and Equipment Purchases. **(Public Works Director Krug)**
10. Approval of Resolution Relating to the Acquisition by Eminent Domain of Property. **(Public Works Director Krug)**
11. Approval of Florida Central Railroad Projects Proposal. **(Public Works Director Krug)**
12. Approval of Code Enforcement Agreement with Town of Windermere with 5% Adjustment to Cover the City of Ocoee's Costs. **(Support Services Director Gaines)**

- **FIRST READING OF ORDINANCE**

- **SECOND READING OF ORDINANCE – PUBLIC HEARING**

13. Palm Drive - Chinapen Property Small-Scale Comprehensive Plan Amendment from Low-Density Residential to Commercial & Rezoning from R-1A to C-2 - CPA-2023-002 & RZ-23-09-09. **(Zoning Manager Whitfield)**

- **PUBLIC HEARING**

14. 16 Floral Street - Wright Property Variance - VR-23-03. **(Zoning Manager Whitfield)**

- **REGULAR AGENDA**

- **COMMENTS FROM COMMISSIONERS**
  (Limit to Five Minutes)

- **ADJOURNMENT**

Notice: In accordance with Florida Statutes 286.0105: Any person who desires to appeal any decision at this meeting will need a record of the proceedings and for this purpose may need to ensure that a verbatim record of the proceedings is made which includes the testimony and evidence upon which the appeal is based. Also, in accordance with Florida Statute 286.26: Persons with disabilities needing assistance to participate in any of these proceedings should contact the office of the City Clerk, 1 N. Bluford Avenue, Ocoee, FL 34761, (407) 905 -3105 48 hours in advance of the meeting.

OCOEE CITY COMMISSION
Ocoee Commission Chambers
1 N. Bluford Avenue
Ocoee, Florida

December 5, 2023 **MINUTES** **6:15 PM**

REGULAR CITY COMMISSION MEETING

- **CALL TO ORDER** 6:15 PM

Mayor Johnson called the regular session to order at 6:15 PM in the Commission Chambers of City Hall. The invocation was led by **Commissioner Hart**, followed by the Pledge of Allegiance to the Flag led by **Commissioner Kennedy**. **City Clerk Sibbitt** called the roll and declared a quorum present.
Present: Mayor Johnson, Commissioner Kennedy, Commissioner Wilsen, Commissioner Firstner, Commissioner Hart
Also Present: City Manager Frank, City Attorney Ardaman, City Clerk Sibbitt

- **PRESENTATIONS AND PROCLAMATIONS** - None

- **STAFF REPORTS AND AGENDA REVIEW** 6:17 PM

Mayor Johnson announced the Emergency Item for Fourth Amendment to the Contract for Purchase and Sale between Wire Development, LLC and the City of Ocoee for the Purchase of City-owned property at Crown Point. **Development Services Director Rumer** summarized that the amendment is needed to close on the property, which interacts with the adjacent Orange County Public Schools' property, and to ensure the completion of future roadways. He further addressed questions from the City Commission.

Motion: Move to approve the Emergency Item for Fourth Amendment to the Contract for Purchase and Sale between Wire Development, LLC and the City of Ocoee for the Purchase of City-owned property at Crown Point. Moved by Commissioner Wilsen, seconded by Commissioner Hart; Motion carried 5-0.

- **PUBLIC COMMENTS** 6:22 PM

The following persons addressed the City Commission:

- **Jim Moyer,** *Ocoee Resident*, expressed his gratitude to the Commission and High Point Church for the Ocoee Remembers event. He also shared his appreciation for the City's recognition of Veteran's Day and for the Commissioners' donations of discretionary funds to the American Legion post which supports local students. He further announced that Thursday, December 7th is the 82nd anniversary of the attack on Pearl Harbor.
- **Saima Plasencia**, *Former Police Chief*, addressed the Commission and inquired if she would be limited to three minutes under Public Comment, citing Florida Statute which she stated allowed no limitations on time or content. **Mayor Johnson** granted her additional time to speak. **Ms. Plasencia** read a prepared statement into the record with regard to being relieved of duty.

- **CONSENT AGENDA 6:35 PM**

Commissioner Wilsen asked for clarification on Item #24 and Item #25 to confirm that Pine Street would not be open to commercial traffic. **Development Services Director Rumer** confirmed the same.

Commissioner Wilsen further commented positively on several projects on the Consent Agenda that will enhance the City.

Consent Agenda Motion

Motion: Move to adopt the Consent Agenda Item #1-25 with Item #6 being pulled for discussion and separate consideration.

Moved by Commissioner Firstner, seconded by Commissioner Hart; Motion carried 5-0.

1. Approval of Minutes from the Regular City Commission Meeting held November 7, 2023. **(City Clerk Sibbitt)**
2. Approval of Reappointment to the Citizen Advisory Council for Ocoee Fire Department (CACOFD). **(City Clerk Sibbitt)**
3. Approval of Ocoee Youth Council Scholarship Award Program. **(City Clerk Sibbitt)**
4. Approval of the First Amendment to the Purchase and Sale Agreement between the City of Ocoee and the Chevron Land and Development Company. **(Assistant City Manager Shadrix)**
5. Approval of the First Amendment to the Development Agreement between the City of Ocoee and Montierre Development PLLC. **(Assistant City Manager Shadrix)**
6. Approval of Vacant Land Purchase of Property Located at 1 Taylor Street. **(City Manager Frank)**

Commissioner Kennedy voiced he is not in support of this item as the City Commission has already voted and given direction to City staff on how to proceed with the Code Liens. He further shared he would support sending this item back to staff to consider another solution. **Mayor Johnson** commented in favor of approving this item due to the court costs involved which he feels will be close to the purchase price, and the possibility of the property being sold to another buyer. He opined that the City purchasing the property is a good way to solve the blight issues they are currently experiencing which he receives numerous complaints about. **Commissioner Kennedy** reiterated his disapproval of this item.

Motion: Move to return Consent Agenda Item #6 back to City staff to present a better option for the City Commission to consider. Moved by Commissioner Kennedy, Died for a lack of second.

Further discussion on the blight of the property, and bringing the property into compliance.

Motion: Move to adopt Consent Agenda Item #6 as presented. Moved by Commissioner Firstner, seconded by Commissioner Wilsen; Motion carried 4-1 with Commissioner Kennedy opposing.

7. Approval of the Utility Easement Agreement for Ocoee Corners Development. **(Development Engineer Keaton)**

8. Approval of the Fullers Cross Road Sidewalk Easement Agreement with Ocoee Village Center. **(Development Engineer Keaton)**

9. Approval of Amendment to Contract for 15 S. Kissimmee Ave and 214 W. McKey Street. **(Development Services Director Rumer)**

10. Approval of Ocoee Village Center Agreement for Transfer of $400,000 for the Fire Station and Non-Substantial Amendment to the PUD. **(Development Services Director Rumer)**

11. Approval of Temporary Parking Lease Agreement for 137 W. McKey Street with VMG Construction, Inc. **(Development Services Director Rumer)**

12. Approval of the Drainage Easement Agreement with GS Crown Point Owner, LLC (FKA Wire Development) for Drainage Outfall Pipe going under a New City Road in the Ocoee Crown Point PUD for the Ocoee Crown Point Mixed-Use project. **(Development Services Director Rumer)**

13. Approval of a Drainage Easement Agreement for Pond 8 in the Ocoee Crown Point PUD with GS Crown Point Owner, LLC (FKA Wire Development) for the Ocoee Crown Point Mixed-Use Project. **(Development Services Director Rumer)**

14. Approval for a Drainage Easement Agreement for Pond 10 in the Ocoee Crown Point PUD Owned and Constructed by Orange County Public Schools (OCPS) on the OCPS Technical School Campus. **(Development Services Director Rumer)**

15. Approval to Proceed with Water and Wastewater Field Operations CIP Projects. **(Finance Director Roberts)**

16. Approval to Piggyback the NCPA/OMNIA Partners Contract for Construction of the Vandergrift Central Park Basketball Court by The NIDY Sports Construction Company, Inc. **(Parks and Recreation Director Johnson)**

17. Approval to Piggyback the NCPA/OMNIA Partners Contract for Construction of Tiger Minor Pickleball Courts by The NIDY Sports Construction Company, Inc. **(Parks and Recreation Director Johnson)**

18. Approval to Waive the Bid Requirements to Resurface the Ocoee Aquatic Center Pool. **(Parks and Recreation Director Johnson)**

19. Approval to Piggyback Sourcewell Cooperative Purchasing Contract for Phase 3 of the Ocoee Action Sports Park. **(Parks and Recreation Director Johnson)**

20. Approval to Enter into an Agreement with SoundThinking, Inc. for Resource Management Software Services. **(Acting Police Chief Ogburn)**

21. Notification of Emergency Repair to Tank #2 at the Forest Oaks Water Treatment Plant per Emergency Notification - Section 21.6, Chapter 21, City of Ocoee Code of Ordinances. **(Utilities Director Croteau)**

22. Approval to Purchase Quiet Pulse Blowers from PSI Technologies Inc. **(Utilities Director Croteau)**

23. Approval to Replace Existing Rotors and Add a New Rotor to each Oxidation Ditch at the City of Ocoee Wastewater Treatment Plant. **(Utilities Director Croteau)**

24. Approval of 429 Business Center Phase II East Large-Scale Final Site Plan and Development Agreement - Project No. LS-2022-014. **(Zoning Manager Whitfield)**

25. Approval of 429 Business Center Phase II West Large-Scale Final Site Plan and Development Agreement - Project No. LS-2022-015. **(Zoning Manager Whitfield)**

- **FIRST READING OF ORDINANCE** 6:46 PM

26. Chinapen Property Small-Scale Comprehensive Plan Amendment from Low-Density Residential to Commercial & Rezoning from R-1A to C-2 - CPA-2023-002 & RZ-23-09-09. **(Zoning Manager Whitfield)**

City Attorney Ardaman read the title of the ordinances, and it was announced this will be presented as a second reading and public hearing at the next scheduled City Commission meeting on January 16, 2024, at 6:15 PM or soon thereafter.

- **SECOND READING OF ORDINANCE – PUBLIC HEARING** - None

- **PUBLIC HEARING** - None

- **REGULAR AGENDA** - None

- **COMMENTS FROM COMMISSIONERS** 6:47 PM

Commissioner Hart – Commented on the following:

1) Complimented Band Director Hendricks and the Ocoee High School Band for their performances during battle of the bands and the Winter Garden Christmas Parade. Explained that he and his wife participated in the parade, representing the City of Ocoee.
2) Applauded Ellie Lou's BBQ for their great food and barbecue sauce.
3) Encouraged citizens to support local businesses and restaurants while shopping for and celebrating the holidays.
4) Urged citizens to come forward with any information they may have regarding the homicide of Gregory Reed. Tips can be provided to the Ocoee Police Department.
5) Commended Staff for the Veteran's Day Ceremony and Family Movie Night events.
6) Encouraged citizens to check on their neighbors during the holiday season.

Commissioner Firstner – Commented on the following:

1) Expressed gratitude to the Public Works department for putting up the fence on Maguire Road south of the Meadow Ridge subdivision.
2) Inquired about the status on the proposed Ordinance for the blanket tree removal issue. **Development Services Director Rumer** addressed his question.
3) Announced the commencement of Operation Santa. The schedule is available on the City's website and Facebook page.
4) Announced the schedule and events for the Jolly Jamboree taking place on Saturday, December 9th in Downtown Ocoee.

Commissioner Wilsen – Commented on the following:
1) Reiterated the Operation Santa schedule and reminded citizens that unwrapped toys are being collected for the Police Department's Holiday Toys for Kids in Need program.
2) Announced the schedule and events for the Jolly Jamboree taking place on Saturday, December 9th in Downtown Ocoee.
3) Commended Parks and Recreation staff member Keith Hendrix on the beautiful Christmas trees.
4) Wished everyone Happy Holidays and a Happy New Year and announced that the next City Commission meeting will take place on January 16, 2024.

Commissioner Kennedy – Commented on the following:
1) Wished everyone a Merry Christmas.
2) Inquired about the status of Lakewood Avenue. **Development Services Director Rumer** addressed his question.
3) Commented on the presentation by former Police Chief Saima Plasencia. Reiterated a previous statement that he does not feel Commissioners should be involved in personnel decisions.

Mayor Johnson introduced Joseph McMullen, Commissioner from the Town of Oakland and founder of HAPCO Music Foundation. HAPCO offers all-day jazz clinics and free jazz concerts at Ocoee High School. **Mr. McMullen** thanked the City Commission for support of the program over the years and explained how the program impacts local students. He announced that on February 3, 2024, a jazz clinic will take place at Ocoee High School, followed by an outdoor jazz festival at the Lakeshore Center which is open to the public with free general admission seating. VIP tickets are available to help fund the program. The Ocoee High School jazz band will open the festival. **Mayor Johnson** requested community sponsors for the program and inquired about donating $5,000 from the contingency fund. **City Manager Frank** confirmed that funds are available and stated that the Commission should make a motion.

Motion: Move to approve donation of $5,000 out of Contingency Funds to go toward the HAPCO Music Foundation. Moved by Commissioner Hart, seconded by Commissioner Kennedy; Motion carried 5-0.

Jamie Douglas with Montierre Development announced that their company will match the City's $5,000 pledge to the program.

Mayor Johnson – Commented on the following:
1) Announced that Tuesday, March 19th is election day. Inquired about polling locations; **City Clerk Sibbitt** confirmed that the election will piggyback off of the Orange County election, therefore there will be several polling locations.
2) Announced the City's election qualifying dates.
3) Announced the cancellation of the next two City Commission meetings and holiday closures.
4) Announced the City received an award for their Annual Consolidated Financial Report.
5) Announced the commencement and schedule of the 23rd Annual Ocoee Fire Department Operation Santa program. Encouraged citizens to provide unwrapped toys for the Ocoee Police Department's Holiday Toys for Kids in Need program.

6) Announced the State of the City will be presented on Tuesday, January 16th at 5:45.
7) Announced the schedule and route for the 16th Annual Dr. Martin Luther King, Jr. Parade taking place on Monday, January 15th.
8) Announced the schedule for the Jolly Jamboree Golf Cart parade on Saturday, December 9th.
9) Voiced concerns about the late start for the Christmas light installation, and requested the trees downtown be wrapped with lights. **City Manager Frank** addressed his concerns.
10) Commended the dinner with Santa and Mrs. Claus event which took place at the Lakeshore Center. **Commissioner Wilsen** echoed his sentiments.
11) Expressed gratitude to Jamie Douglas and Montierre for their support in the community.

- **ADJOURNMENT 7:11 PM**

APPROVED:

Attest: **City of Ocoee**

_____ _____

Melanie Sibbitt, City Clerk **Rusty Johnson, Mayor**

STAFF REPORT

Meeting Date: January 16, 2024
Item #: 2

Contact Name: CJ VanCamp
Contact Number: Ext. 2006

Department Director: Tom Smothers
City Manager: Robert Frank

Subject: Approval of Educational Affiliation Agreements. (Deputy Fire Chief Van Camp)

Background Summary:
The Ocoee Fire Department is seeking formal affiliation agreements with Seminole State College of Florida (SSC) and with First Response Training Group (FRTG), which will allow personnel who are attending paramedic school the ability to complete their ride time on the agency's rescue units and receive credit towards their education.

Issue:
Should the Honorable Mayor and City Commissioners approve the agreement and authorize the Mayor to enter into affiliation agreements with SSC and FRTG to enable personnel to receive credit for paramedic clinical ride time?

Recommendations:
Staff recommends the Honorable Mayor and City Commissioners approve the agreement and authorize the Mayor to enter into the affiliation agreements with SSC and FRTG.

Attachments:
1. 2023 FRTG Affiliation Agreement
2. SSC Educational Services Agreement - Clinical Placements

Financial Impacts:
There is no financial impact caused by these agreements.

Type of Item: Consent

AFFILATION AGREEMENT BETWEEN
FIRST RESPONSE TRAINING GROUP
AND
City of Ocoee Fire Department

THIS AFFILIATION AGREEMENT, is entered into by and between FIRST RESPONSE TRAINING GROUP (hereinafter the "INSTITUTE"), and the City of Ocoee, (hereinafter the "CITY").

WHEREAS, the City provides fire rescue services through its Fire Department in the City of Ocoee, Florida; and

WHEREAS, the Institute provides an approved program of study in the field of EMS, (hereinafter the "Program"), and desires its students in the Program to obtain educational experiences by utilizing appropriate facilities and personnel of third parties; and

WHEREAS, City has the appropriate facilities and personnel for the Program's student (hereinafter the "Students"), and has agreed to make such facilities and personnel available to Institute; and

WHEREAS, the City and Institute desire to cooperate to establish and implement such a Program involving the Students and personnel of Institute, and the facilities and personnel of City.

NOW AND THEREFORE, in consideration of mutual promises herein, Institute and City agree that any Program established and implemented by City and Institute during the term of this Agreement shall be subject to the following terms and conditions:

1. RESPONSIBILITY OF CITY. Except for acts to be performed by Institute pursuant to the provisions of this Agreement, City shall furnish the premises (hereinafter the "Facilities"), personnel, services and all other items necessary for the educational experience, and, in connection with such Program, City also shall:

a. Comply with all applicable federal, state and local laws, ordinances, rules and regulations.

b. Cooperate with the Institute in enforcing Institute policies and procedures related to Student performance and Student conduct.

c. Endeavor to comply with all applicable requirements of any accreditation authority over City and Institute and certify such compliance upon request by Institute.

d. Permit the authority responsible for accreditation of Institute's curriculum to inspect the Facilities, services and all other items provided by City for purposes of the educational experience upon reasonable notice.

e. Designate a person to serve for City as liaison (hereinafter the "City Liaison"), and provide Institute, in writing, the name and professional and academic credentials of the person proposed as City Liaison prior to the start of the educational experiences(s).

f. Endeavor to include appropriate members of the Institute's faculty in City staff meetings when policies to be discussed will affect or are related to the Program and/or Students at the City's discretion.
g. Provide the Students with an appropriate orientation of City's policies and procedures.
h. Provide the Students with learning opportunities under appropriate supervision.
i. Retain ultimate responsibility for total patient care.
j. Provide faculty and Students with emergency accident care for injuries, or illnesses of an acute nature, incurred while on duty at the Facilities. Payments for such emergency accident care shall be the personal responsibility of the individual at the individual's expense.
k. Not guarantee it will place or maintain placement of any Student at City.
l. Notify Institute, in writing, of any Student whose work or conduct with clients, patients or personnel is not, in the opinion of City, in accordance with acceptable procedures or standards of performance or otherwise could disrupt patient care or City's operation. City may immediately remove from the premises any Student who poses an immediate threat or danger to personnel or to the quality of medical services, or for unprofessional behavior. In such event, said Student's participation in the Program at City shall immediately cease, subject to being resumed only with mutual written agreement of City and Institute.

2. **RESPONSIBILITIES OF INSTITUTE.** The Institute shall:
a. Require a physical examination of all students prior to their participation in the program. This examination shall include general physical exam, utilizing history (mobility, motor skills, hearing, visual and tactile abilities) and immunization assessment (Rubella, Rubeola, Varicella, Diphtheria, Hepatitis B) TB screening and Tetanus.
b. Provide City, in writing, the names of the Students assigned by Institute to participate in the Program prior to the beginning of the Program's educational experience(s).
c. Assign only those Students who have satisfactorily completed those portions of Institute curricula that are a prerequisite to Program participation.
d. The Institute shall procure and maintain during the term of this Agreement and any subsequent renewal, professional liability insurance to cover any and all liability arising from claims, damages, or injuries to persons or property of whatsoever kind or nature arising out of the activities of the Students. Such liability insurance shall be on a per occurrence basis in amounts no less than one million dollars/three million dollars ($1,000,000.00/$3,000,000.00) for personal injuries. Prior to any Student commencing his or her training, the Institute shall provide the City with a Certificate of Insurance evidencing such coverage. City shall be named as an additional insured under such professional liability policy or policies.
e. The Institute agrees to be liable for any and all damages, losses, and expenses incurred, by the City, caused by the acts and/or omissions of the Institute, or any of its employees, agents, sub-contractors, representatives, volunteers, students or the like. The Institute agrees to indemnify, defend and hold the City harmless for any and all claims, suits, judgments or damages, losses and expenses, including but not limited to, court costs, expert witnesses, consultation services and attorney's fees, arising from and all

acts and/or omissions of the Institute, or any of its employees, agents, sub-contractors, representatives, volunteers, students or the like. Said indemnification, defense, and hold harmless actions shall not be limited by any insurance amounts required hereunder.

f. Will be responsible for ensuring that Independent Contractors carry appropriate auto insurance coverage and that copies of said documents will be provided to City upon request.

g. Designate a member of the Institute's faculty (hereinafter the "Institute Representative") to coordinate the educational experience of Students participating in the Program with the City Liaison, and provide City, in writing, the name of the Institute Representative.

h. Upon receipt of City's written notice of a Student or other Program participant whose work or conduct with clients, patients or personnel is not in accordance with acceptable procedures or standards of performance or otherwise could disrupt patient care or City's operation, evaluate such Student's or Program participant's conduct and take appropriate action. It is understood that, if City takes action under the provisions of Section 1.1, above, that the Student's or Program participant's participation in the Program at City shall immediately cease, subject to being resumed only with the mutual written agreement of Institute and City.

i. Not guarantee it will place or maintain the placement of any Program Student at City.

j. Agree to require participating Faculty, Staff and Students to comply with the applicable policies and procedures of the City during the course of their participation, to the extent permitted by law and, in so far as they do not conflict with any of the Institute's policies and procedures, including those governing the use and disclosure of individually identifiable health information under Federal law and regulations, including but not limited to regulations under the Health Insurance Portability and Accountability Act ("HIPPA"). Solely for the purpose of defining the Students' role in relation to the use and disclosure of the City's protected health information, such Students are defined as members of the City's workforce, as the term is defined by 45 CFR 160.103, when engaged in activities pursuant to this Agreement. However, such Students are not and shall not be considered to be employees of the City.

k. Agree to require Program Students, Faculty and other Institute-employed Program participants, as a condition of their participation in the Program, to execute a Confidentiality Statement [(Exhibit A) or in another form mutually accepted by the parties] with the City, acknowledging their responsibility under applicable Federal law and regulations, including but not limited to regulations under the Health Insurance Portability and Accountability Act ("HIPPA"), to keep confidential any information regarding City patients, as well as confidential information of the City.

l. Maintain individual records of class and clinical instruction, evaluations of Students, preceptor, and faculty competency and health.

3. **RESPONSIBILITY TO INFORM STUDENTS**. The Institute shall inform its Students in the Program that as participants in the Program they are required to:

a. Comply with the policies and procedures of City, to the extent permitted by law and, in so far as they do not conflict with any of the Institute's policies and procedures, including the City policies on confidentiality and disclosure of information;

b. Comply with state and federal laws and regulations;
c. Provide and wear the necessary and appropriate uniform while on duty at City;
d. Obtain prior written approval of both parties to this Agreement before publishing any material related to the learning experience provided under the terms of this Agreement.
e. Maintain the confidentiality of all records or information exchanged in the course of the Program.
f. Acknowledge and agree that neither the Institute nor the City guarantees to place or maintain placement of any Program Student under this Agreement.
g. Obtain and document, at the Student's sole expense, such trustworthy and verifiable criminal background and/or health or other information as City requests or requires as a prerequisite to City's considering Student for placement at City. Upon Institute's request, Student shall also submit the above-referenced criminal and/or health or other information to the Institute.
h. Execute and abide by the Confidentiality Statement (Exhibit A) pursuant to Section 2(i) above.
i. Refrain from operating any City vehicle or apparatus.

4. NOTICES. All notices under this Agreement shall be in writing and delivered by personal delivery or United States, certified, return receipt requested, mail. Such notices shall be delivered to the following:

CITY LIAISON:

_____
_____
_____
_____
_____
_____

INSTITUTE REPRESENTATIVE
Jason J Marquez
President/CEO
FIRST RESPONSE TRAINING GROUP
6310 Hazeltine National Drive
Orlando, FL 32822
(407) 592-1184

5. **REQUEST FOR WITHDRAWAL OF STUDENT**. The City has the right to request the Institute to withdraw any Student from the Education Program whose conduct or work with patients or personnel is not, in the opinion of the Director/Administrator of the City, in accordance with acceptable standards of performance. The Institute may at any time withdraw a student whose progress, conduct, or work does not meet the standards of the Institute for continuation in the Education Program. Final action concerning the student is the responsibility of the Institute.

6.**INDEPENDENT CONTRACTOR**. The relationship of the parties hereunder shall be an independent contractor relationship, and not an agency, employment, joint venture or partnership relationship. Neither party shall have the power to bind the other party or contract in the name of the other party. All persons employed by a party in connection with this Agreement shall be considered employees of that party and shall in no way, either directly or indirectly, be considered employees or agents of the other party. Students shall participate in the Program hereunder for the sole consideration of obtaining

an educational experience. No Program Student or participant shall be considered an employee or volunteer of City by virtue of that Program participation.

7. SOVEREIGN IMMUNITY. The City expressly retains all rights, benefits and immunities of sovereign immunity in accordance with Section 768.28, Florida Statutes. Notwithstanding anything set forth in any section, article or paragraph of this Agreement to the contrary, nothing in the Agreement shall be deemed as a waiver of sovereign immunity or limits of liability which may have been adopted by the Florida Legislature or may be adopted by the Florida legislature, and the cap on the amount and liability of City for damages, attorney fees and costs, regardless of the number or nature of claims in tort, equity, or contract, shall not exceed the dollar amount set by the Florida Legislature for tort. Nothing in this Agreement shall inure to the benefit of any third party for the purpose of allowing any claim against the City which would otherwise be barred under the Doctrine of Sovereign Immunity or operation of law.

8. ASSIGNMENTS. This Agreement may not be assigned to a third party without the prior written consent of the non-assigning party.

9. THIRD PARTY OBLIGATIONS. This Agreement is made solely for the benefit of the parties named in Section 1, and is not intended to create rights or any cause of action in any third parties.

10. PERFORMANCE. A delay in or failure of performance of either party that is caused by occurrences beyond the control of either party shall not constitute a default hereunder, or give rise to any claim for damages.

11. TERM OF AGREEMENT. The effective date of this Agreement is the date of execution of the parties, if not executed by both parties on the same date, the latter date of execution shall be deemed to be the effective date. The term of this Agreement shall be for a period of five (5) years commencing on the effective date and may be renewed for successive five (5) year periods if agreed upon in writing by the parties hereto. Within ninety (90) days of the termination date, the Institute's Program Director shall send a letter to the City requesting its review of the Agreement for renewal. If no changes to the Agreement are proposed, the City will acknowledge, in writing, the continuance of the Agreement for another five (5) year period. If either party to this Agreement wishes to terminate the Agreement, it is understood that at least ninety (90) days prior written notice shall be given prior to the termination date of the Agreement. If such notice is given, this Agreement shall terminate at the end of the ninety (90) days' notice; EXCEPT THAT the program shall continue as necessary on a limited basis for the purpose of permitting Students actually participating in the Program at the time of termination to finish the Program at City.

12. APPLICABLE LAW. The validity, interpretation and enforcement of this Agreement shall be governed by the laws of the State of Florida.

13. NONDISCRIMINATION. During this Agreement neither party shall discriminate against any person on the basis of race, color, religion, gender, national or ethnic origin, disability or veteran or marital status.

14. ENTIRETY OF AGREEMENT. This Agreement contains the entire Agreement between the parties and supersedes all prior agreements and understandings, oral or written, with respect to the subject matter contained herein.

15. AMENDMENTS AND MODIFICATIONS TO AGREEMENT. All amendments and modifications to this Agreement shall be made by addenda and with the written mutual consent of both parties. The addenda shall be attached to the Agreement, and shall include the date and signatures of parties agreeing to the modification(s).

16. COPIES OF AGREEMENT. Copies of this Agreement shall be placed on file and be available at the Institute and at the City.

17. JOINT NEGOTIATIONS. This Agreement shall be construed as resulting from joint negotiations and authorship. No part of this Agreement shall be construed as the product of any one of the parties hereto.
IN WITNESS WHEREOF, the parties hereto have caused this Agreement to be executed on this **19th**, day of **September 2023**.

City of Ocoee, FLORIDA

By: _____
Fire Chief

First Response Training Group

By: Jason John Marquez
FIRST RESPONSE TRAINING GROUP
Jason J Marquez
President / CEO

Date: 9/19/23

EDUCATIONAL SERVICES AGREEMENT
Emergency Medical Services Programs

THIS AGREEMENT made and entered into this _____ day of _____, 20__ by and between the DISTRICT BOARD OF TRUSTEES OF SEMINOLE STATE COLLEGE OF FLORIDA, having its principal facility at 100 Weldon Boulevard., Sanford, Florida 32773-6199, (the "College") and _____ (the "Contractor"), having its principal facility at

_____ .

W I T N E S S E T H:

WHEREAS, the College operates a community learning center in Seminole County under the name of Seminole State College of Florida, and

WHEREAS, the Contractor operates a facility suitable for clinical/laboratory (on-the-job) training of specified areas of instruction conducted by the College, and

WHEREAS, the College desires to utilize the Contractor's facility, equipment, and where appropriate and allowable, personnel to conduct student training.

ARTICLE I
AGREEMENT SPECIFICATIONS

Orientation shall consist of observing, assisting, and other such duties as may be expected of new employees.

It is understood that individuals entering healthcare programs offered by the College do so on a voluntary basis and with a primary purpose of furthering their education within the related fields of study.

It is understood that the College assumes full responsibility for the education of its students.

It is understood that each student assigned to the clinical site shall have completed the appropriate course work, as well as the OSHA educational training program on bloodborne pathogens and HIV, CPR certification, and all other necessary immunizations required by the Contractor. Contractor and College agree that any immunization requirements for placement at Contractor's site shall solely be requirements of the Contractor and not of the College. Evidence of all required immunizations shall be provided by College to the Contractor except for COVID-19 immunization, which shall be provided directly by the applicable individuals to the Contractor, per sections 112.0441 and 389.00319, Florida Statutes.

The Contractor agrees to structure experiences as needed to meet the mutually accepted objectives of the clinical experiences.

ARTICLE II

REPRESENTATIONS AND WARRANTIES BY THE COLLEGE

The College warrants and represents the following:

A. That minimum educational admission standards will be established which are consistent with the appropriate accrediting or program approval agency, and that where accrediting and approval agencies

for healthcare programs do not exist, minimum educational standards shall be developed by the College's program chairperson and/or director, staff, and special program advisory committee.

B. That the Director of Clinical Education (DCE) will coordinate student practicums with the Contractor's Clinical Coordinator of Clinical Education (CCCE) and/or Clinical Instructor (CI).

C. That duly enrolled students shall be accepted for educational training experiences with the understanding that the maximum number of students assigned to the Contractor departments shall not exceed the capacity determined by the Contractor at its sole discretion.

D. That the College's director, educational chairperson, or director will furnish a written and planned sequence of services and learning competencies specified in the College's program curriculum.

E. That any special provision, policies, or accrediting agency requirements for educational programs shall be set forth, in writing, within the appendices of this Agreement.

F. That the College, subject to the limitations of section 768.28, Florida Statutes, and decisions thereunder, shall be responsible for any claims, liabilities, or damages directed against the College as the result of the negligent acts or omissions of the College, its officers, employees or agents. Nothing herein is intended to nor shall it be construed to be a waiver of sovereign immunity by the College as adopted in Florida Statute 2.01, nor shall it be construed as consent by the College to be sued by third parties in any matter arising out of this Agreement. The limited waiver of sovereign immunity set forth in Florida Statute 768.28 for tort actions brought against the College shall be applicable to any action brought pursuant to this provision, even if the action sounds in contract and/or indemnity rather than in tort.

G. That the College, through the Florida College System Risk Management Consortium (FCSRMC), shall obtain and maintain occurrence-type professional liability insurance coverage in amounts not less than $2,000,000 per incident and $5,000,000 annual aggregate covering the student participants and any faculty members for instruction/supervision of students only. The College shall provide a certificate of insurance to the Contractor evidencing such insurance coverage if required by the Contractor. Should any of the above described policies be cancelled before the expiration date thereof, notice will be delivered in accordance with the policy provisions.

H. That, prior to assignment with the Contractor, the College shall require prospective students to obtain a criminal background check in any State/Province in which student has worked, resided, or been a student within 24 months prior to accepting assignment with the Contractor. If the student does not pass the applicable screening, the College will not permit him or her to participate in the program.

ARTICLE III

REPRESENTATIONS AND WARRANTIES BY THE CONTRACTOR

The Contractor warrants and represents the following:

A. That clinical/laboratory (on-the-job) training experiences for the College's Healthcare students will be provided for each student officially enrolled and accepted to the educational program of the College.

B. That the Contractor agrees to abide by the following College's student personnel policies:

1. That students who are scheduled for training shall be scheduled within the hours and days as agreed from time to time between the Contractor's supervisor and the College's coordinator.

2. That students will wear appropriate clothing which has been adopted by the Contractor and the College when on duty, if special type clothing is required.

3. That students will be allowed to make up Contractor training time which may be lost because of unavoidable absence, as determined by the ACCE and the CCCE. That make-up time shall enable aforementioned students to complete the required program Contractor training hours in each identified service area.

4. The final grade for all of the clinical experiences will be given by the DCE. The grade is determined after the ACCE reviews all required documentation from the DCE, CI, and student. Each course syllabus outlines the GRADE requirements.

C. That the DCE shall be granted access to the Contractor's facility where students have been assigned for training purposes and that the purpose shall be to monitor and evaluate the student's training activity and program of instruction.

D. That supervised training experiences in all phases of the profession shall be permitted as it applies to the Contractor's employee job assignment and the College's program curriculum, and the orientation, training, and experience the students have received.

E. That the DCE and faculty shall, when possible, be included in the Contractor's departmental meetings when policies, work procedures, or actions to be discussed will affect and/or relate to the student's training schedule with the Contractor.

F. That the Contractor shall maintain during the term of this Agreement professional liability insurance in amounts of not less than $1 million per incident/$3 million aggregate.

G. Notwithstanding any provision to the contrary within this Agreement, any party contracting with College under the Agreement shall fully comply with the requirements of: (i) Sections 1002.22, 1002.221, and 1006.52, Florida Statutes; (ii) The Family Educational Rights and Privacy Act of 1972, codified at 20 U.S.C. 1232g ("FERPA"); (iii) the regulations issued under FERPA at 34 C.F.R. Part 99; and (iv) any other federal, state or College law, regulation, rule, policy or procedure regarding the confidentiality of student information and records including, but not limited to, restrictions on re-disclosure of such records / information (items (i) through (iv) collectively, "Privacy Laws"). Every such contracting party agrees, for itself, its officers, employees, agents, representatives, heirs, successors, assigns, contractors or subcontractors, to fully indemnify and hold harmless College and its officers and employees for any violation of the Privacy Laws, including, without limitation, defending College and its officers and employees against any complaint, administrative or judicial proceeding, payment of any penalty imposed upon College, or payment of any and all costs, damages, judgments or losses incurred by or imposed upon College arising out of a breach of this covenant by the party, or an officer, employee, agent, representative, heir, successor, assign, contractor, or sub-contractor of the party to the extent that the party or an officer, employee, agent, representative, heir, successor, assign, contractor, or sub-contractor of the party shall either intentionally or negligently violate any of the Privacy Laws.

Additionally, for purposes of FERPA, College hereby designates Contractor's employees and

independent contractors involved with or related to administration of this Agreement as school officials with a legitimate educational interest in the education records provided, and those individuals shall be under the direct control of College with regard to the use and maintenance of educational records. Further, Contractor agrees not to redisclose any information contained in educational records provided by College except as may be authorized by the affected student or otherwise provided by law. Contractor agrees to treat all education records as confidential and not to disclose such student education records except to College and Contractor officials who need the information to fulfill their professional responsibilities under this Agreement, or as required or permitted by law (including the Privacy Laws).

H. Pursuant to Section 119.0701, Florida Statutes, any party contracting with the College is required to:

1. Keep and maintain public records required by the public agency to perform the service.
2. Upon request from the public agency's custodian of public records, provide the public agency with a copy of the requested records or allow the records to be inspected or copied within a reasonable time at a cost that does not exceed the cost provided in this chapter or as otherwise provided by law.
3. Ensure that public records that are exempt or confidential and exempt from public records disclosure requirements are not disclosed except as authorized by law for the duration of the contract term and following completion of the contract if the Contractor does not transfer the records to the public agency.
4. Upon completion of the contract, transfer, at no cost, to the public agency all public records in possession of the Contractor or keep and maintain public records required by the public agency to perform the service. If the Contractor transfers all public records to the public agency upon completion of the contract, the Contractor shall destroy any duplicate public records that are exempt or confidential and exempt from public records disclosure requirements. If the Contractor keeps and maintains public records upon completion of the contract, the Contractor shall meet all applicable requirements for retaining public records. All records stored electronically must be provided to the public agency, upon request from the public agency's custodian of public records, in a format that is compatible with the information technology systems of the public agency.

ALL REQUESTS FOR PUBLIC RECORDS RECEIVED BY THE CONTRACTOR MUST BE IMMEDIATELY REFERRED / FORWARDED TO THE COLLEGE.

IF THE CONTRACTOR HAS QUESTIONS REGARDING THE APPLICATION OF CHAPTER 119, FLORIDA STATUTES, TO THE CONTRACTOR'S DUTY TO PROVIDE PUBLIC RECORDS RELATING TO THIS CONTRACT,

CONTACT THE CUSTODIAN OF RECORDS VIA THE OFFICE OF LEGAL AFFAIRS AT 100 WELDON BOULEVARD, SANFORD, FLORIDA 32773-6199, (407) 708-2363 OR SQUIRESJ@SEMINOLESTATE.EDU.

ARTICLE IV

MISCELLANEOUS

The College and Contractor warrant and represent the following:

A. That illness, injury, or absence of any student shall be reported immediately by the student to the appropriate designated Contractor supervisor and the College instructor. A report of any accident shall be completed within a reasonable time as required by the Contractor and the College.

B. Upon the request of the Contractor, the College will immediately withdraw from the Contractor's facility any student whose work performance, or personal conduct, in the opinion of the Contractor is having a detrimental or disruptive effect upon the normal operation of the departments or personnel of the Contractor or constitutes a risk to safe patient care.

C. That the Contractor reserves the exclusive right and accepts the responsibility to refuse Contractor training privileges in its facility or in any specified department to any student who has previously been withdrawn by the College at the Contractor's request, or who has been legally dismissed as an employee of and by the Contractor for reasons which make acceptance as a Contractor affiliate inadvisable in the opinion of the Contractor.

D. That the College may likewise withdraw any student whose progress, personal conduct, or work adjustment does not meet the minimum standards set forth by the College for continuation in the enrolled educational program.

E. That final action which may be taken regarding a student rests with the College.

F. That the College and Contractor may withdraw from this Agreement by delivering written notice of such a decision not less than sixty (60) calendar days in advance of such withdrawal. Where the Contractor chooses to withdrawal a training facility, the Administrator agrees that students presently enrolled and receiving Contractor training will be allowed to complete their scheduled Contractor training program even though the time required may exceed the sixty (60) day period.

G. That the Contractor will provide medical assistance (if available) upon the student becoming ill or injured, at the student's expense.

H. That the Contractor will provide adequate classroom and conference room space and library facilities for the use of the available instructional materials when applicable.

I. That the Contractor has the ultimate responsibility for the patient.

J. That the College will provide the Contractor a copy of clinical instructor's professional license upon request.

K. That students shall adhere to all policies, procedures, rules, and regulations of the Contractor as periodically amended.

L. That the College and Contractor agree that there will be no distinction in regard to placement or treatment of students because of race, color, religion, national origin, ethnicity, age, sex, gender, veterans or military status, disability, sexual orientation, genetic information, marital status, or any other factor protected under applicable federal, state, and local laws and regulations and the parties agree to adhere to the provisions of Federal and State Laws regarding discrimination.

M. This Agreement shall be governed by the laws of the State of Florida. Venue for any actions or proceedings relating to this Agreement shall be in Seminole County, Florida.

ARTICLE V

MODIFICATIONS, ADDENDA AND TERM RENEWAL

A. No counterparts; facsimile signature allowed. This Agreement may not be executed in counterparts. It may however, along with any and all exhibits, be executed and delivered by facsimile signature by any of the parties to the other parties; to the extent permissible under Florida law, a facsimiles signature shall have the same legal force and effect as an original signature and the receiving party may rely on the receipt of such document so executed and delivered by facsimile signature as if the original had been received.

B. That this instrument contains the entire general agreement and any special provisions within the appendices, for the respective parties with regard to the Contractor training activities contemplated herein, and no representations, statements, or agreements have been made between the parties or their employees which are not specified in this Agreement. This Agreement may not be changed, amended, or modified except in a writing signed by both parties.

C. Each individual signing this Agreement directly and expressly represents and warrants that they have been given (and have received and accepted) authority to sign this Agreement by all necessary corporate action on behalf of the party for whom it is indicated they have signed, and that their signature shall bind the party to the terms of this Agreement. Each party to this Agreement is entitled to rely on this representation and warranty when entering into this Agreement.

D. The initial term of this Agreement shall be for a period of _____ years commencing _____ and ending _____. This Agreement may automatically renew for period(s) of one (1) year. During any renewal term, the provisions of this Agreement shall remain the same.

ARTICLE VII

NOTICE

Any communication provided for herein shall be given in writing to the College and Contractor at the addresses shown below, or any other address specified by the parties.

COLLEGE: **CONTRACTOR:**

Associate VP
School of Business, Health & Public Safety [Contact Name]

Seminole State College of Florida
100 Weldon Blvd
Sanford, FL 32773
Phone: (407) 708-2315

[Facility Name]
[City, State, Zip Code]
[Phone]

IN WITNESS WHEREOF, the parties have hereunto set their hand and seals, and executed this Agreement on the day and year first written.

THE DISTRICT BOARD OF TRUSTEES OF SEMINOLE STATE COLLEGE OF FLORIDA:

_____

(Administrator) (Date)

CONTRACTOR:

_____

(Administrator) (Date)

_____

(print name)

_____

(Title)

STAFF REPORT

Meeting Date: January 16, 2024
Item #: 3

Contact Name: Chris McKinstry
Contact Number: Ext. 3055

Department Director: Vincent Ogburn
City Manager: Robert Frank

Subject: Approval of Police Department Body-Worn Camera Expansion. (Deputy Police Chief McKinstry)

Background Summary:

The City of Ocoee Police Department is requesting permission to obtain fifteen (15) additional body-worn cameras in order to outfit all uniformed personnel. The body-worn cameras will have unlimited storage. The costs for the additional cameras is $32,640.92, which has already been accounted for in the 2024 budget. The addition of the fifteen (15) body-worn cameras will require an amendment to the existing Axon agreement.

Issue:

Should the Honorable Mayor and City Commissioners approve an agreement extension for a 1-year period between Axon and the City of Ocoee Police Department to provide fifteen (15) additional body-worn cameras to completely outfit all personnel engaged in public contact?

Recommendations:

Staff recommends the Honorable Mayor and City Commissioners approve an agreement extension between Axon and the City of Ocoee Police Department to provide fifteen (15) additional body-worn cameras to completely outfit all personnel including Patrol Officers, Community Service Aides, Reserve Officers, and Managers. Staff also recommends the City Manager be authorized to approve change orders to this contract up to the limit of his purchasing authority, and up to the budgeted amount for these services each fiscal year.

Attachments:

1. Axon Extension

Financial Impacts:

Eleven (11) additional body-worn cameras will be funded by the current Ocoee Police Department's budget and four (4) body-worn cameras will be funded through existing Impact Fees. No additional funding is requested.

Type of Item: Consent

Axon Enterprise, Inc.
17800 N 85th St.
Scottsdale, Arizona 85255
United States
VAT: 86-0741227
Domestic: (800) 978-2737
International: +1.800.978.2737

Q-534866-45271.586GM

Issued: 12/11/2023

Quote Expiration: 12/28/2023

Estimated Contract Start Date: 01/01/2024

Account Number: 336327

Payment Terms: N30

Delivery Method:

SHIP TO	BILL TO
Ocoee Police Dept. - FL 646 Ocoee Commerce Pkwy Ocoee, FL 34761-2918 USA	Ocoee Police Dept. - FL 1 N Bluford Ave Ocoee FL 34761-2202 USA Email:

SALES REPRESENTATIVE	PRIMARY CONTACT
Griffin McKean Phone: Email: gmckean@axon.com Fax:	Jack Davidson Phone: (407) 554-7194 Email: jdavidson@ocoee.org Fax: (407) 905-3164

Quote Summary

Program Length	30.4516 Months
TOTAL COST	$97,727.28
ESTIMATED TOTAL W/ TAX	$97,727.28

Discount Summary

Average Savings Per Year	$2,559.16
TOTAL SAVINGS	$6,494.22

Payment Summary

Date	Subtotal	Tax	Total
Dec 2023	$32,640.92	$0.00	$32,640.92
Oct 2024	$32,543.18	$0.00	$32,543.18
Oct 2025	$32,543.18	$0.00	$32,543.18
Total	**$97,727.28**	**$0.00**	**$97,727.28**

Quote Unbundled Price:	**$104,221.50**
Quote List Price:	**$99,987.00**
Quote Subtotal:	**$97,727.28**

Pricing

All deliverables are detailed in Delivery Schedules section lower in proposal

Item	Description	Qty	Term	Unbundled	List Price	Net Price	Subtotal	Tax	Total
Program									
Unlimited7+	Unlimited 7+ Bundle	15	30	$195.67	$186.26	$181.24	$81,557.28	$0.00	$81,557.28
A la Carte Hardware									
H00003	AB4 1-Bay Dock Bundle	15	30		$229.00	$7.63	$3,435.00	$0.00	$3,435.00
H00001	AB4 Camera Bundle	15	30		$849.00	$28.30	$12,735.00	$0.00	$12,735.00
Total							**$97,727.28**	**$0.00**	**$97,727.28**

Delivery Schedule

Hardware

Bundle	Item	Description	QTY	Estimated Delivery Date
AB4 1-Bay Dock Bundle	100201	AXON BODY 4 - 1 BAY DOCK	15	12/15/2023
AB4 1-Bay Dock Bundle	71104	NORTH AMER POWER CORD FOR AB3 & T7 1-BAY DOCK/DATAPORT	15	12/15/2023
AB4 Camera Bundle	100147	AXON BODY 4 - NA - US FIRST RESPONDER - BLK - RAPIDLOCK	15	12/15/2023
AB4 Camera Bundle	100466	USB-C to USB-C CABLE FOR AB4	17	12/15/2023
AB4 Camera Bundle	74028	WING CLIP MOUNT, AXON RAPIDLOCK	17	12/15/2023
Unlimited 7+ Bundle	100681	SIGNAL SIDEARM, SENSOR ONLY	15	12/15/2023
Unlimited 7+ Bundle	71044	BATTERY, SIGNAL SIDEARM, CR2430 SINGLE PACK	30	12/15/2023
Unlimited 7+ Bundle	73309	AXON CAMERA REFRESH ONE	15	06/15/2026
Unlimited 7+ Bundle	73313	1-BAY DOCK AXON CAMERA REFRESH ONE	15	06/15/2026

Software

Bundle	Item	Description	QTY	Estimated Start Date	Estimated End Date
Unlimited 7+ Bundle	73478	REDACTION ASSISTANT USER LICENSE	15	01/01/2024	07/14/2026
Unlimited 7+ Bundle	73618	AXON COMMUNITY REQUEST+ LICENSE	15	01/01/2024	07/14/2026
Unlimited 7+ Bundle	73638	STANDARDS ACCESS LICENSE	15	01/01/2024	07/14/2026
Unlimited 7+ Bundle	73680	RESPOND DEVICE PLUS LICENSE	15	01/01/2024	07/14/2026
Unlimited 7+ Bundle	73682	AUTO TAGGING LICENSE	15	01/01/2024	07/14/2026
Unlimited 7+ Bundle	73683	10 GB EVIDENCE.COM A-LA-CART STORAGE	150	01/01/2024	07/14/2026
Unlimited 7+ Bundle	73686	EVIDENCE.COM UNLIMITED AXON DEVICE STORAGE	15	01/01/2024	07/14/2026
Unlimited 7+ Bundle	73739	PERFORMANCE LICENSE	15	01/01/2024	07/14/2026
Unlimited 7+ Bundle	73746	PROFESSIONAL EVIDENCE.COM LICENSE	15	01/01/2024	07/14/2026

Services

Bundle	Item	Description	QTY
Unlimited 7+ Bundle	11642	THIRD-PARTY VIDEO SUPPORT LICENSE	15

Warranties

Bundle	Item	Description	QTY	Estimated Start Date	Estimated End Date
Unlimited 7+ Bundle	80464	EXT WARRANTY, CAMERA (TAP)	15	12/15/2024	07/14/2026
Unlimited 7+ Bundle	80466	EXT WARRANTY, SINGLE-BAY DOCK (TAP)	15	12/15/2024	07/14/2026

Payment Details

Dec 2023						
Invoice Plan	**Item**	**Description**	**Qty**	**Subtotal**	**Tax**	**Total**
Year 1	H00001	AB4 Camera Bundle	15	$4,253.49	$0.00	$4,253.49
Year 1	H00003	AB4 1-Bay Dock Bundle	15	$1,147.29	$0.00	$1,147.29
Year 1	Unlimited7+	Unlimited 7+ Bundle	15	$27,240.14	$0.00	$27,240.14
Total				**$32,640.92**	**$0.00**	**$32,640.92**

Oct 2024						
Invoice Plan	**Item**	**Description**	**Qty**	**Subtotal**	**Tax**	**Total**
Year 2	H00001	AB4 Camera Bundle	15	$4,240.76	$0.00	$4,240.76
Year 2	H00003	AB4 1-Bay Dock Bundle	15	$1,143.86	$0.00	$1,143.86
Year 2	Unlimited7+	Unlimited 7+ Bundle	15	$27,158.56	$0.00	$27,158.56
Total				**$32,543.18**	**$0.00**	**$32,543.18**

Oct 2025						
Invoice Plan	**Item**	**Description**	**Qty**	**Subtotal**	**Tax**	**Total**
Year 3	H00001	AB4 Camera Bundle	15	$4,240.76	$0.00	$4,240.76
Year 3	H00003	AB4 1-Bay Dock Bundle	15	$1,143.86	$0.00	$1,143.86
Year 3	Unlimited7+	Unlimited 7+ Bundle	15	$27,158.56	$0.00	$27,158.56
Total				**$32,543.18**	**$0.00**	**$32,543.18**

Tax is estimated based on rates applicable at date of quote and subject to change at time of invoicing. If a tax exemption certificate should be applied, please submit prior to invoicing.

Standard Terms and Conditions

Axon Enterprise Inc. Sales Terms and Conditions

Axon Master Services and Purchasing Agreement:

This Quote is limited to and conditional upon your acceptance of the provisions set forth herein and Axon's Master Services and Purchasing Agreement (posted at www.axon.com/legal/sales-terms-and-conditions), as well as the attached Statement of Work (SOW) for Axon Fleet and/or Axon Interview Room purchase, if applicable. In the event you and Axon have entered into a prior agreement to govern all future purchases, that agreement shall govern to the extent it includes the products and services being purchased and does not conflict with the Axon Customer Experience Improvement Program Appendix as described below.

ACEIP:

The Axon Customer Experience Improvement Program Appendix, which includes the sharing of de-identified segments of Agency Content with Axon to develop new products and improve your product experience (posted at www.axon.com/legal/sales-terms-and-conditions), is incorporated herein by reference. By signing below, you agree to the terms of the Axon Customer Experience Improvement Program.

Acceptance of Terms:

Any purchase order issued in response to this Quote is subject solely to the above referenced terms and conditions. By signing below, you represent that you are lawfully able to enter into contracts. If you are signing on behalf of an entity (including but not limited to the company, municipality, or government agency for whom you work), you represent to Axon that you have legal authority to bind that entity. If you do not have this authority, please do not sign this Quote.

Signature

12-11-2023

Date Signed

12/11/2023

STAFF REPORT

Meeting Date: January 16, 2024
Item #: 4

Contact Name: Martrivus Keaton
Contact Number: Ext. 1088

Department Director: Michael Rumer
City Manager: Robert Frank

Subject: Approval of a Five -Year Warranty Surety and Maintenance, Materials, and Workmanship Agreement for Ocoee Village Center Townhomes. (Development Engineer Keaton)

Background Summary:

Ocoee Village Center Townhomes are located south of Clarcona Ocoee Rd between the Oak Level Heights Subdivision and North Lakewood Ave. The property comprises 232 luxury residential townhome units on approximately 23.93 acres. The infrastructure improvements include potable water, sanitary sewer, other private utilities, a stormwater collection system, and associated landscaping. Identified punch list repairs are currently being completed, and the developer is nearly ready to start the five-year warranty period for the public improvements.

As a requirement of the Land Development Code, the developer is required to furnish the City with a Surety to cover any possible damages discovered during the next five years. Should the developer not choose to make those repairs, Kimaya Ocoee Village LLC has provided the City with a Warrant Bond in the amount of 10% of the constructed improvements. The Bond provided is for a total of $335,690.34. The attached Maintenance, Materials, and Workmanship Agreements (Form 9 from the Land Development Code) act as the executable document between the developer and the City. The Bond will be returned to the developer upon completion of the five-year warranty period and the repair of any damages caused over those five years.

Issue:

Should the Honorable Mayor and City Commissioners approve the Warrant Bond as provided by Kimaya Ocoee Village LLC, for the five-year warranty for the Ocoee Village Center Townhomes and execute the Maintenance, Materials, and Workmanship Agreement?

Recommendations:

The Development Services Department recommends the Honorable Mayor and City Commissioners approve the Surety and the execution of the Maintenance, Materials, and Workmanship Agreement with Kimaya Ocoee Village LLC, for the Ocoee Village Center Townhomes.

Attachments:

1. 5 Year MMW Bond and Agreement - Ocoee Village Center Townhomes

Financial Impacts:
There are no financial impacts to the City in accepting this five-year warranty Surety.

Type of Item: Consent

MAINTENANCE, MATERIALS, AND WORKMANSHIP WARRANT BOND

Development Services – Planning Division
1 N. Bluford Avenue| Ocoee, FL 34761
Phone: 407.905.3157

Received Date – Office Use Only

Bond No. 4531558

KNOW ALL MEN BY THESE PRESENTS, that Vishaal Gupta, of Kimaya Ocoee Village LLC of Orange County, Florida, hereinafter referred to as "Developer" and Great American Insurance Company of 301 E. Fourth Street, Cincinnati, OH 45202 of Hamilton County, Florida, hereinafter called "Surety", are held and firmly bound unto the City of Ocoee, Florida, a municipal corporation in the State of Florida, as obligee, in the full and just sum of $335,690.34 dollars, lawful money of the United States of America, to the payment of which sum, well and truly to be made, the Developer and Surety bind themselves, their heirs, executors, administrators, successors and assigns, jointly and severally, firmly by these presents.

WHEREAS, the Developer has developed and constructed a subdivision in the City of Ocoee, Florida, known and identified as Ocoee Village Center and in connection therewith has installed with the approval of the City certain roads, streets, sewers, water systems, drainage facilities (including retention and detention ponds), and/or other improvements under the provisions, conditions, and requirements of the subdivision approval granted the 14 day of **September**, 20 **21**, by the Board of City Commissioners of the City of Ocoee, Florida.

NOW THEREFORE, THE CONDITION OF THIS OBLIGATION IS SUCH that if the Developer shall maintain all improvements required as a condition of the subdivision approval, including but not limited to roads and other structures, sewer and water systems, drainage facilities (including retention and detention ponds) and other public utilities, in first class condition for a period of five (5) years from the date of issuance of a Certificate of Completion, and if the Developer shall replace all paving or other structures which within said five (5) year period shall be found not to comply with said subdivision approval, and that if the Developer shall replace any other improvements, including but not limited to the sewer and water systems, drainage facilities (including retention and detention ponds), and other public utilities, the materials, workmanship, performance or structural integrity of which shall be found not to comply with said subdivision approval for a five (5) year period following issuance of the Certificate of Completion by the City and shall pay any and all costs or expenses incidental to the performance of any work required to be performed hereunder, then this obligation shall be void; otherwise to be and remain in full force and effect.

FURTHERMORE, if at any time during the five (5) year period following the issuance of the Certificate of Completion the City notifies the Developer and Surety, in writing, of any deficiency or fault in the materials, workmanship, performance or structural integrity of the required improvements, including but not limited to roads and other structures, sewer and water systems, drainage facilities (including retention and detention ponds) and other public utilities, then this bond shall continue in full force and effect until such deficiency or fault is corrected.

SIGNED, SEALED, AND DATED THIS 20th DAY OF December, 20 23.

DEVELOPER

Great American Insurance Company

SURETY **William Reidinger, Attorney-in-Fact**

CITY OF OCOEE SIGNATURE PAGE
Maintenance, Materials, and Workmanship Warrant Bond

CITY:

CITY OF OCOEE, FLORIDA

By:_____
Rusty Johnson, Mayor

ATTEST:

_____
Melanie Sibbitt, City Clerk

(SEAL)

APPROVED BY THE CITY OF OCOEE COMMISSION AT A MEETING HELD ON _____ _____, 20___ UNDER AGENDA ITEM NO. ____

FOR USE AND RELIANCE ONLY BY THE CITY OF OCOEE, FLORIDA; APPROVED AS TO FORM AND LEGALITY this ____ day of _____, 20__.

FISHBACK DOMINICK

By: _____
Richard Geller, City Attorney

GREAT AMERICAN INSURANCE COMPANY®

Administrative Office: 301 E 4TH STREET • CINCINNATI, OHIO 45202 • 513-369-5000 • FAX 513-723-2740

The number of persons authorized by
this power of attorney is not more than 1

Bond No. 4531558

POWER OF ATTORNEY

KNOW ALL MEN BY THESE PRESENTS: That the GREAT AMERICAN INSURANCE COMPANY, a corporation organized and existing under and by virtue of the laws of the State of Ohio, does hereby nominate, constitute and appoint the person or persons named below its true and lawful attorney-in-fact, for it and in its name, place and stead to execute on behalf of the said Company, as surety, the specific bond, undertaking or contract of suretyship referenced herein; provided that the liability of the said Company on any such bond, undertaking or contract of suretyship executed under this authority shall not exceed the limit stated below. The bond number on this Power of Attorney must match the bond number on the bond to which it is attached or it is invalid.

Name	Address	Limit of Power
William Reidinger	20 N Martingale Rd, Suite 100 Schaumburg, IL 60173	$100,000,000.00

Principal: Park Square Enterprises, LLC
Obligee: City of Ocoee, FL

IN WITNESS WHEREOF the GREAT AMERICAN INSURANCE COMPANY has caused these presents to be signed and attested by its appropriate officers and its corporate seal hereunto affixed this 20th day of December, 2023.

Attest

GREAT AMERICAN INSURANCE COMPANY

Assistant Secretary

Divisional Senior Vice President

MARK VICARIO (877-377-2405)

STATE OF OHIO, COUNTY OF HAMILTON - ss:

On this 20th day of December, 2023, before me personally appeared MARK VICARIO, to me known, being duly sworn, deposes and says that he resides in Cincinnati, Ohio, that he is a Divisional Senior Vice President of the Bond Division of Great American Insurance Company, the Company described in and which executed the above instrument; that he knows the seal of the said Company; that the seal affixed to the said instrument is such corporate seal; that it was so affixed by authority of his office under the By-Laws of said Company, and that he signed his name thereto by like authority.

SUSAN A KOHORST
Notary Public
State of Ohio
My Comm. Expires
May 18, 2025

This Power of Attorney is granted by authority of the following resolutions adopted by the Board of Directors of Great American Insurance Company by unanimous written consent dated June 9, 2008.

RESOLVED: That the Divisional President, the several Divisional Senior Vice Presidents, Divisional Vice Presidents and Divisonal Assistant Vice Presidents, or any one of them, be and hereby is authorized, from time to time, to appoint one or more Attorneys-in-Fact to execute on behalf of the Company, as surety, any and all bonds, undertakings and contracts of suretyship, or other written obligations in the nature thereof; to prescribe their respective duties and the respective limits of their authority; and to revoke any such appointment at any time.

RESOLVED FURTHER: That the Company seal and the signature of any of the aforesaid officers and any Secretary or Assistant Secretary of the Company may be affixed by facsimile to any power of attorney or certificate of either given for the execution of any bond, undertaking, contract of suretyship, or other written obligation in the nature thereof, such signature and seal when so used being hereby adopted by the Company as the original signature of such officer and the original seal of the Company, to be valid and binding upon the Company with the same force and effect as though manually affixed.

CERTIFICATION

I, STEPHEN C. BERAHA, Assistant Secretary of Great American Insurance Company, do hereby certify that the foregoing Power of Attorney and the Resolutions of the Board of Directors of June 9, 2008 have not been revoked and are now in full force and effect.

Signed and sealed this 20th day of December, 2023.

Assistant Secretary

S1194E (05/20)

STAFF REPORT

Meeting Date: January 16, 2024
Item #: 5

Contact Name: Michael Rumer
Contact Number: Ext. 1018

Department Director: Michael Rumer
City Manager: Robert Frank

Subject: Approval of Resolution Relating to Naming a Tract of Land in the Ocoee Crown Point PUD as Public Right-of-Way and Naming the Right-of-Way as Ocoee Crown Point Parkway. (Development Services Director Rumer)

Background Summary:

The City Commission initially approved the Ocoee Crown Point PUD (Planned Unit Development) on June 19, 2004. Within the PUD, the future development of roads and stormwater systems has been designed and designated as Tracts. More specifically, tracts 16B, 35, and 12C were designated as right-of-way with the City of Ocoee's responsibility for ownership and maintenance (see Ocoee Crown Point PUD Land Use Plan attachment). In lieu of platting the tracts as right-of-way, staff is bringing forth this resolution naming the tracts as public right-of-way. The designation as right-of-way will help facilitate the Orange County Public Schools (OCPS) West Orange Technical Center's utility permitting with Orange County. The right-of-way will be platted in the future once the remaining public right-of-way tracts are constructed as public roads. These tracts are being developed by the Ocoee Crown Point Mixed Use project by Wire Development.

Issue:

Should the Honorable Mayor and City Commissioners approve a Resolution naming a tract of land in the Crown Point PUD as public right-of-way for the extension of Ocoee Crown Point Parkway?

Recommendations:

Staff recommends the Honorable Mayor and City Commissioners approve a Resolution naming a tract of land in the Crown Point PUD as public right-of-way for the extension of Ocoee Crown Point Parkway.

Attachments:

1. Resolution
2. Site 73 S&D 3
3. Site 73 S&D 4
4. Ocoee Crown Point PUD Land Use Plan Indicating Area of Right-of-way

Financial Impacts:

None

Type of Item: Consent

RESOLUTION NO. _____

A RESOLUTION OF THE CITY COMMISSION OF THE CITY OF OCOEE, FLORIDA, DESIGNATING CERTAINS LANDS KNOWN AS OCOEE CROWN POINT PARKWAY AS PART OF THE CITY STREET SYSTEM FOR PUBLIC RIGHT-OF-WAY USE; PROVIDING FOR RECORDING, CONFLICTS AND AN EFFECTIVE DATE.

WHEREAS, the City of Ocoee (the "City") has acquired certain lands in fee simple for the purposes of improving and making such lands part of the City's city street system (a/k/a municipal road system) for public right-of-way use; and

WHEREAS, the City desires to make those certain lands owned in fee simple by the City that are described in the sketches and legal descriptions attached hereto as Exhibit "A" ("Ocoee Crown Point Parkway") and incorporated herein by this reference as part of the City's city street system available for public right-of-way use subject to the City's superior jurisdiction, operation, control, regulation and maintenance; and

WHEREAS, Article VIII, section 2(b) of the Florida Constitution and Florida Statutes § 166.021(1), the Municipal Home Rule Powers Act, confer broad Home Rule Powers on the City, and whereas the City has statutory jurisdiction under Florida Statutes § 334.03 and § 335.0415 to operate, control and maintain the city street system, which consists of "all local roads within a municipality, and all collector roads inside that municipality, which are not part of the county road system."

NOW, THEREFORE, BE IT RESOLVED BY THE CITY COMMISSION OF THE CITY OF OCOEE, FLORIDA:

SECTION I: Recitals. The above recitals are true and correct and constitute findings of the City Commission.

SECTION II: Designation of City Street. That Ocoee Crown Point Parkway is hereby designated as part of the City's city street system (a/k/a municipal road system) as a public right-of-way subject to the City's superior jurisdiction, operation, control, regulation and maintenance.

SECTION III: Recording. After its adoption, the City Clerk shall record this Resolution in the Public Records of Orange County, Florida.

SECTION IV: Conflicts. All resolutions or parts thereof in conflict herewith are hereby repealed to the extent of such conflict.

SECTION V: Effective Date. This Resolution shall take effect immediately upon its adoption.

ADOPTED at a Regular Meeting on this ____ day of _____, 2024.

CITY:

CITY OF OCOEE, FLORIDA

By:_____
Rusty Johnson, Mayor

ATTEST:

_____
Melanie Sibbitt, City Clerk

(SEAL)

APPROVED BY THE CITY OF OCOEE COMMISSION AT A MEETING HELD ON _____ _____, 20___ UNDER AGENDA ITEM NO. ____

FOR USE AND RELIANCE ONLY BY THE CITY OF OCOEE, FLORIDA; APPROVED AS TO FORM AND LEGALITY this ____ day of _____, 20__.

FISHBACK DOMINICK

By: _____
Richard Geller, City Attorney

EXHIBIT "A"

See attached sketch and legal descriptions prepared by T2 Utility Engineers Job Number 06238-001-12 Sheets 1 and 2, and Job Number 06238-001-12 Sheets 1 through 3

SKETCH AND LEGAL DESCRIPTION

LEGAL DESCRIPTION:

THE LAND REFERRED TO HEREIN BELOW IS SITUATED IN THE COUNTY OF ORANGE, STATE OF FLORIDA, AND IS DESCRIBED AS FOLLOWS:

A PARCEL OF LAND LOCATED IN THE SOUTHWEST 1/4 OF SECTION 6, TOWNSHIP 22 SOUTH, RANGE 28 EAST, AND THE NORTHWEST 1/4 QUARTER OF SECTION 7, TOWNSHIP 22 SOUTH, RANGE 28 EAST, ORANGE COUNTY, FLORIDA. SAID PARCEL BEING MORE PARTICULARLY DESCRIBED AS FOLLOWS:

COMMENCE AT THE SOUTHWEST CORNER OF SAID SECTION 6; THENCE N 00° 20' 22" W ALONG THE WEST LINE OF THE SOUTHWEST 1/4 OF SAID SECTION 6, A DISTANCE OF 30.00 FEET TO THE POINT OF BEGINNING; THENCE CONTINUE ALONG SAID SECTION LINE N 00° 20' 22" W A DISTANCE OF 50.00 FEET; THENCE LEAVING SAID SECTION LINE RUN N 89° 41' 44" E A DISTANCE OF 55.19 FEET TO A POINT OF CURVATURE OF A CURVE CONCAVE SOUTHWESTERLY, HAVING A RADIUS OF 590.00 FEET, A CHORD BEARING OF S 66° 52' 53" E AND A CHORD LENGTH OF 469.08 FEET; THENCE ALONG THE ARC OF SAID CURVE THROUGH A CENTRAL ANGLE OF 46° 50' 49" FOR AN ARC LENGTH OF 482.40 FEET TO THE POINT OF TANGENCY; THENCE, S 43° 27' 28" E A DISTANCE OF 27.07 FEET TO THE NORTHWESTERLY RIGHT OF WAY LINE STATE ROAD 429 AS SHOWN ON ORLANDO-ORANGE COUNTY EXPRESSWAY AUTHORITY WESTERN BELTWAY RIGHT OF WAY MAP PROJECT NO. 75320-6460-602/603 DATED APRIL 1997; THENCE, S 36° 10' 34" W A DISTANCE OF 50.83 FEET; THENCE DEPARTING SAID RIGHT OF WAY LINE RUN N 43° 27' 28" W A DISTANCE OF 36.22 FEET TO A POINT OF CURVATURE OF A CURVE CONCAVE SOUTHWESTERLY, HAVING A RADIUS OF 540.00 FEET, A CHORD BEARING OF N 66° 52' 53" W AND A CHORD LENGTH OF 429.33 FEET; THENCE ALONG THE ARC OF SAID CURVE THROUGH A CENTRAL ANGLE OF 46° 50' 49" FOR AN ARC LENGTH OF 441.52 FEET TO THE POINT OF TANGENCY; THENCE S 89° 41' 44" W A DISTANCE OF 55.16 FEET TO THE POINT OF BEGINNING.

SAID LANDS CONTAINING 0.63 ACRES MORE OR LESS.

LANDS SUBJECT TO RIGHTS-OF-WAYS, EASEMENTS OR RESTRICTIONS ON RECORD IF ANY.

NOTES:

1. THIS SKETCH AND DESCRIPTION IS NOT A BOUNDARY SURVEY.
2. SURVEY MAP AND REPORT OR THE COPIES THEREOF ARE NOT VALID WITHOUT THE SIGNATURE AND THE ORIGINAL RAISED SEAL OF A FLORIDA LICENSED SURVEYOR AND MAPPER.
3. LANDS SHOWN HEREON WERE NOT ABSTRACTED FOR RIGHTS OF WAY, EASEMENTS, OWNERSHIP, AND/OR OTHER INSTRUMENTS OF RECORD.
4. REVISIONS DO NOT CONSTITUTE A RECERTIFICATION OF THE EXISTING FIELD CONDITIONS OF THIS SURVEY.
5. BEARINGS SHOWN HEREON ARE ASSUMED AND BASED ON THE WEST LINE OF THE SOUTHWEST 1/4 OF SECTION 6, TOWNSHIP 22 SOUTH, RANGE 28 EAST, AS BEING NORTH 00° 20' 22" WEST.
6. THE DESCRIPTION SHOWN HEREON WAS PREPARED BY THIS SURVEYOR.

THE HEREON DESCRIBED PROPERTY IS TRUE AND CORRECT TO THE BEST OF OUR KNOWLEDGE AND BELIEF AS PREPARED UNDER OUR DIRECTION IN JULY 7, 2020. I FURTHER CERTIFY THAT THIS THIS SKETCH AND DISCRIPTION MEETS THE STANDARDS OF PRACTICE AS SET FORTH IN RULE 5J-17 ADOPTED BY THE FLORIDA BOARD OF PROFESSIONAL SURVEYORS AND MAPPERS, PURSUANT TO FLORIDA STATUTE 472.027.

SKETCH AND LEGAL DESCRIPTION
NOT A SURVEY

Table Of Contents:

Sheet 1 of 2 - Legal description, Certification & Notes
Sheet 2 of 2 - Sketch

T2 utility engineers
1-855-222-T2UE | WWW.T2UE.COM

DRAWN BY: LSA	SKETCH OF DESCRIPTION
CHECKED BY: IH	JOB NUMBER: 06238-001-12
REVISIONS:	

DATE:8/12/2020

IVAN R. HERNANDEZ, PSM
FLORIDA PROFESSIONAL SURVEYOR AND MAPPER
LICENSE NUMBER: 7016

SKETCH AND LEGAL DESCRIPTION

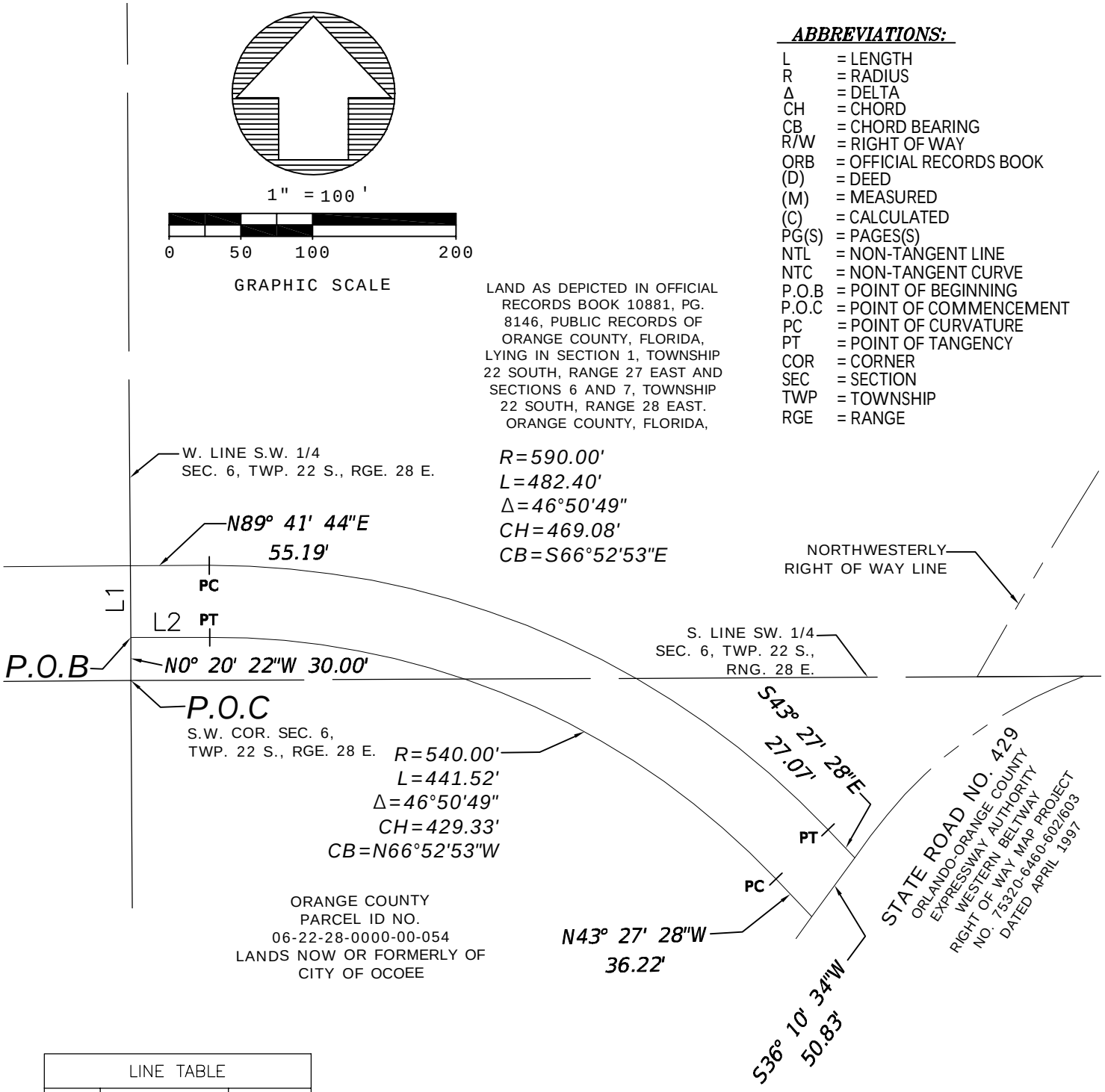

ABBREVIATIONS:

L	= LENGTH
R	= RADIUS
Δ	= DELTA
CH	= CHORD
CB	= CHORD BEARING
R/W	= RIGHT OF WAY
ORB	= OFFICIAL RECORDS BOOK
(D)	= DEED
(M)	= MEASURED
(C)	= CALCULATED
PG(S)	= PAGES(S)
NTL	= NON-TANGENT LINE
NTC	= NON-TANGENT CURVE
P.O.B	= POINT OF BEGINNING
P.O.C	= POINT OF COMMENCEMENT
PC	= POINT OF CURVATURE
PT	= POINT OF TANGENCY
COR	= CORNER
SEC	= SECTION
TWP	= TOWNSHIP
RGE	= RANGE

LINE TABLE		
LINE	BEARING	LENGTH
L1	N00°20'22"W	50.00'
L2	S89°41'44"W	55.16'

T2 utility engineers
1-855-222-T2UE | WWW.T2UE.COM

Table Of Contents:
Sheet 1 of 2 - Legal description, Certification & Notes
Sheet 2 of 2 - Sketch

SKETCH AND LEGAL DESCRIPTION
NOT A SURVEY

SKETCH OF DESCRIPTION
JOB NUMBER: 06238-001-12

SCALE: 1"= 100'

SHEET: 2 OF 2

SKETCH AND LEGAL DESCRIPTION

LEGAL DESCRIPTION:

THE LAND REFERRED TO HEREIN BELOW IS SITUATED IN THE COUNTY OF ORANGE, STATE OF FLORIDA, AND IS DESCRIBED AS FOLLOWS:

A PARCEL OF LAND LOCATED IN THE SOUTHEAST 1/4 OF SECTION 1, TOWNSHIP 22 SOUTH, RANGE 28 EAST, THE SOUTHWEST 1/4 OF SECTION 6, TOWNSHIP 22 SOUTH, RANGE 28 EAST, AND THE NORTHWEST 1/4 OF SECTION 7, TOWNSHIP 22 SOUTH, RANGE 28 EAST, ORANGE COUNTY, FLORIDA. SAID PARCEL BEING MORE PARTICULARLY DESCRIBED AS FOLLOWS:

COMMENCE AT THE SOUTHWEST CORNER OF SAID SECTION 6; THENCE N 00° 20' 22" W ALONG THE WEST LINE OF THE SOUTHWEST 1/4 OF SAID SECTION 6, A DISTANCE OF 80.00 FEET TO THE POINT OF BEGINNING; THENCE LEAVING SAID SECTION LINE RUN N 89° 41' 44" E A DISTANCE OF 55.19 FEET TO A POINT OF CURVATURE OF A CURVE CONCAVE SOUTHWESTERLY, HAVING A RADIUS OF 590.00 FEET, A CHORD BEARING OF S 66° 52' 53" E AND A CHORD LENGTH OF 469.08 FEET; THENCE ALONG THE ARC OF SAID CURVE THROUGH A CENTRAL ANGLE OF 46° 50' 49" FOR AN ARC LENGTH OF 482.40 FEET TO THE POINT OF TANGENCY; THENCE S 43° 27' 28" E A DISTANCE OF 27.07 FEET TO THE NORTHWESTERLY RIGHT OF WAY LINE OF STATE ROAD 429 AS SHOWN ON ORLANDO-ORANGE COUNTY EXPRESSWAY AUTHORITY WESTERN BELTWAY RIGHT OF WAY MAP PROJECT NO. 75320-6460-602/603 DATED APRIL 1997; THENCE ALONG SAID RIGHT OF WAY LINE RUN S 36° 10' 34" W A DISTANCE OF 549.51 FEET TO NON-TANGENT LINE; THENCE LEAVING SAID RIGHT OF WAY LINE RUN S 89° 44' 02" W A DISTANCE OF 177.68 FEET TO THE WEST LINE OF THE NORTHWEST QUARTER OF SECTION 7, OF SAID TOWNSHIP 22 SOUTH, RANGE 28 EAST; THENCE N 00° 20' 22" W ALONG SAID SECTION LINE A DISTANCE OF 567.93 FEET TO SAID SOUTHWEST CORNER OF SECTION 6; THENCE S 89° 44' 02" W ALONG THE SOUTH LINE OF THE SOUTHEAST QUARTER OF SAID SECTION 1 A DISTANCE OF 391.35 FEET TO THE NON-TANGENT CURVE CONCAVE NORTHEASTERLY, HAVING A RADIUS OF 580.00 FEET, A CHORD BEARING OF N 73° 26' 54" W AND A CHORD LENGTH OF 302.81 FEET; THENCE ALONG THE ARC OF SAID CURVE THROUGH A CENTRAL ANGLE OF 30° 15' 49" FOR AN ARC LENGTH OF 306.36 FEET TO THE NON-TANGENT LINE; ALSO BEING A SOUTHERLY RIGHT OF WAY LINE OF WEST ORANGE TRAIL, AS RECORDED IN OFFICIAL RECORDS BOOK 5043, PAGE 2627 ORANGE COUNTY, FLORIDA; THENCE N 44° 56' 48" E ALONG SAID RIGHT OF WAY LINE A DISTANCE OF 82.56 FEET TO THE A NON-TANGENT CURVE, CONCAVE NORTHEASTERLY, HAVING A RADIUS OF 500.00 FEET, A CHORD BEARING OF S 75° 23' 46" E AND A CHORD LENGTH OF 257.27 FEET; THENCE ALONG THE ARC OF SAID CURVE THROUGH A CENTRAL ANGLE OF 29° 49' 00" FOR AN ARC LENGTH OF 260.20 FEET TO THE POINT OF TANGENCY; THENCE N 89° 41' 44" E A DISTANCE OF 373.85 FEET TO THE POINT OF BEGINNING.

SAID LAND CONTAINING 6.41 ACRES MORE OR LESS.

PARCEL 2

COMMENCE AT THE SOUTHWEST CORNER OF SAID SECTION 6; THENCE S 89° 44' 02" W ALONG THE SOUTH LINE OF THE SOUTHEAST QUARTER OF SAID SECTION 1, A DISTANCE OF 840.45 FEET TO THE NORTHWESTERLY RIGHT OF WAY LINE OF SAID WEST ORANGE TRAIL; THENCE N 44° 56' 48" E ALONG SAID RIGHT OF WAY LINE A DISTANCE OF 165.99 FEET TO THE POINT OF BEGINNING AND TO A POINT OF A NON-TANGENT CURVE CONCAVE NORTHEASTERLY, HAVING A RADIUS OF 580.00 FEET, A CHORD BEARING OF N 35° 09' 38" W AND A CHORD LENGTH OF 361.07 FEET; THENCE ALONG THE ARC OF SAID CURVE THROUGH A CENTRAL ANGLE OF 36° 16' 17" FOR AN ARC LENGTH OF 367.17 FEET TO A POINT OF INTERSECTION WITH A NON-TANGENT LINE; THENCE N 72° 58' 31" E A DISTANCE OF 80.00 FEET TO A POINT OF A NON-TANGENT CURVE CONCAVE NORTHEASTERLY, HAVING A RADIUS OF 500.00 FEET, A CHORD BEARING OF S 35° 49' 33" E AND A CHORD LENGTH OF 322.28 FEET; THENCE ALONG THE ARC OF SAID CURVE THROUGH A CENTRAL ANGLE OF 37° 36' 06" FOR AN ARC LENGTH OF 328.14 FEET TO SAID NORTHWESTERLY RIGHT OF WAY LINE OF WEST ORANGE TRAIL; THENCE S 44° 56' 48" W ALONG SAID RIGHT OF WAY LINE A DISTANCE OF 80.97 FEET TO THE POINT OF BEGINNING.

SAID LAND CONTAINING 0.64 ACRES MORE OR LESS.

NOTES:

1. THIS SKETCH AND DESCRIPTION IS NOT A BOUNDARY SURVEY.
2. SURVEY MAP AND REPORT OR THE COPIES THEREOF ARE NOT VALID WITHOUT THE SIGNATURE AND THE ORIGINAL RAISED SEAL OF A FLORIDA LICENSED SURVEYOR AND MAPPER.
3. LANDS SHOWN HEREON WERE NOT ABSTRACTED FOR RIGHTS OF WAY, EASEMENTS, OWNERSHIP, AND/OR OTHER INSTRUMENTS OF RECORD.
4. REVISIONS DO NOT CONSTITUTE A RECERTIFICATION OF THE EXISTING FIELD CONDITIONS OF THIS SURVEY.
5. BEARINGS SHOWN HEREON ARE ASSUMED AND BASED ON THE WEST LINE OF THE SOUTHWEST 1/4 OF SECTION 6, TOWNSHIP 22 SOUTH, RANGE 28 EAST, AS BEING NORTH 00° 20' 22" WEST.
6. THE DESCRIPTION SHOWN HEREON WAS PREPARED BY THIS SURVEYOR.

THE HEREON DESCRIBED PROPERTY IS TRUE AND CORRECT TO THE BEST OF OUR KNOWLEDGE AND BELIEF AS PREPARED UNDER OUR DIRECTION IN JULY 7, 2020. I FURTHER CERTIFY THAT THIS THIS SKETCH AND DISCRIPTION MEETS THE STANDARDS OF PRACTICE AS SET FORTH IN RULE 5J-17 ADOPTED BY THE FLORIDA BOARD OF PROFESSIONAL SURVEYORS AND MAPPERS, PURSUANT TO FLORIDA STATUTE 472.027.

SKETCH AND LEGAL DESCRIPTION
NOT A SURVEY

Table Of Contents:

Sheet 1 of 3 - Legal description, Certification & Notes
Sheet 2&3 of 3 - Sketch

T2 utility engineers
1-855-222-T2UE | WWW.T2UE.COM

DRAWN BY: LSA	SKETCH OF DESCRIPTION
CHECKED BY: IH	JOB NUMBER: 06238-001-12
REVISIONS:	

DATE:3/16/2021

IVAN R. HERNANDEZ, PSM
FLORIDA PROFESSIONAL SURVEYOR AND MAPPER
LICENSE NUMBER: 7016

SKETCH AND LEGAL DESCRIPTION

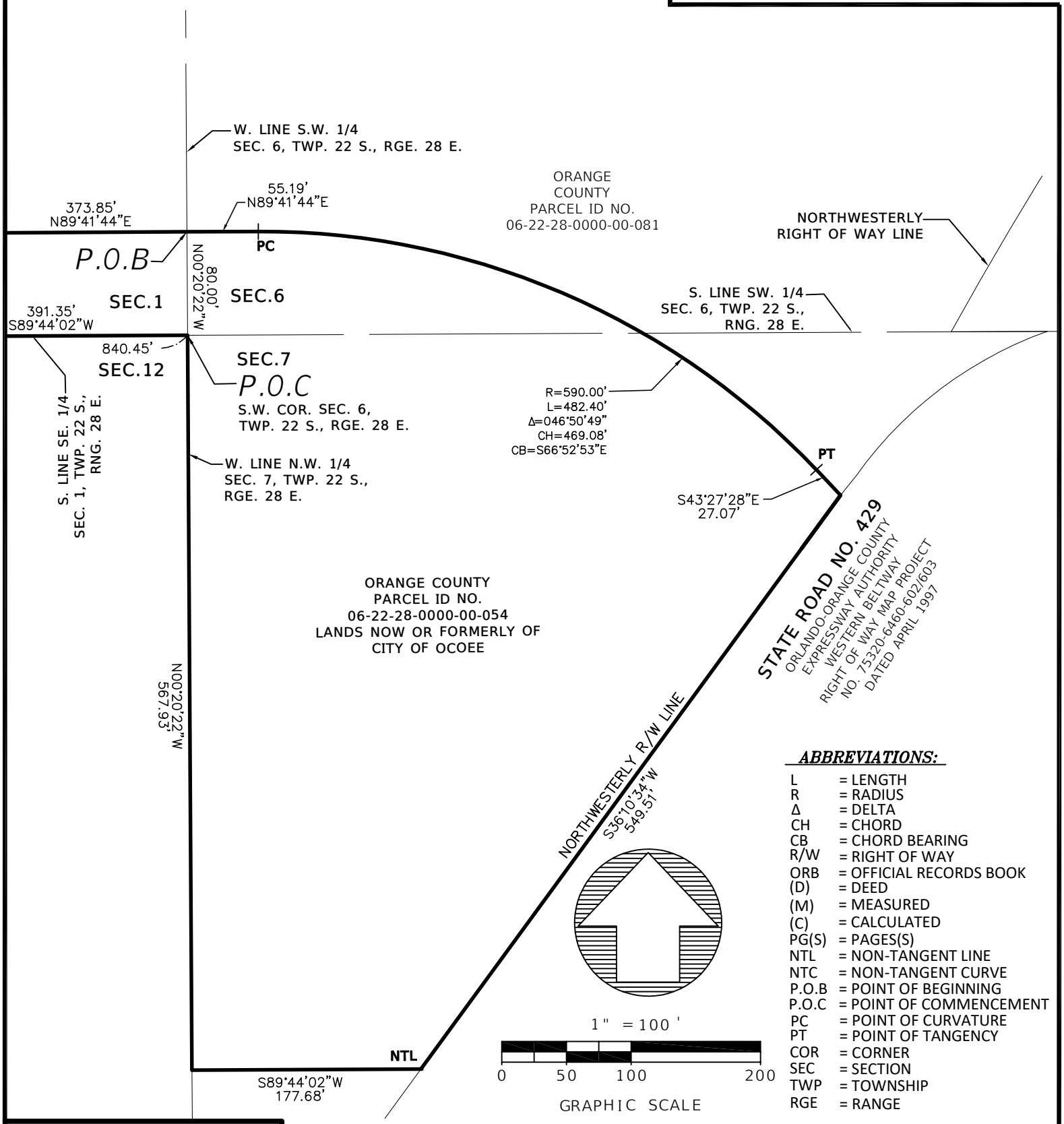

ABBREVIATIONS:

L	= LENGTH
R	= RADIUS
Δ	= DELTA
CH	= CHORD
CB	= CHORD BEARING
R/W	= RIGHT OF WAY
ORB	= OFFICIAL RECORDS BOOK
(D)	= DEED
(M)	= MEASURED
(C)	= CALCULATED
PG(S)	= PAGES(S)
NTL	= NON-TANGENT LINE
NTC	= NON-TANGENT CURVE
P.O.B	= POINT OF BEGINNING
P.O.C	= POINT OF COMMENCEMENT
PC	= POINT OF CURVATURE
PT	= POINT OF TANGENCY
COR	= CORNER
SEC	= SECTION
TWP	= TOWNSHIP
RGE	= RANGE

Table Of Contents:

Sheet 1 of 3 - Legal description, Certification & Notes
Sheet 2&3 of 3 - Sketch

T2 utility engineers
1-855-222-T2UE | WWW.T2UE.COM

SKETCH AND LEGAL DESCRIPTION
NOT A SURVEY

SKETCH OF DESCRIPTION
JOB NUMBER: 06238-001-12

SCALE: 1"= 100'

SHEET: 2 OF 3

SKETCH AND LEGAL DESCRIPTION

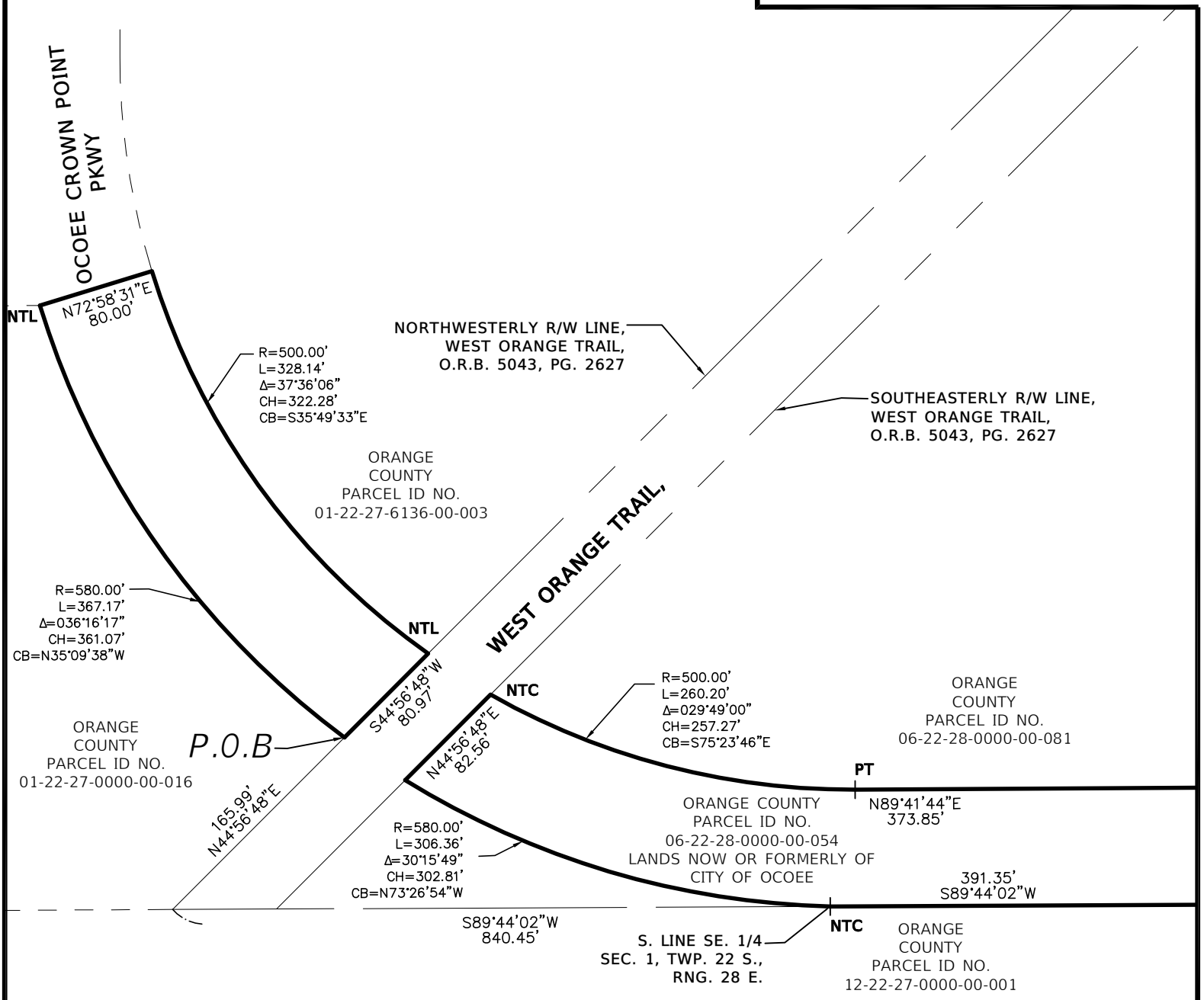

ABBREVIATIONS:

L	= LENGTH
R	= RADIUS
Δ	= DELTA
CH	= CHORD
CB	= CHORD BEARING
R/W	= RIGHT OF WAY
ORB	= OFFICIAL RECORDS BOOK
(D)	= DEED
(M)	= MEASURED
(C)	= CALCULATED
PG(S)	= PAGES(S)
NTL	= NON-TANGENT LINE
NTC	= NON-TANGENT CURVE
P.O.B	= POINT OF BEGINNING
P.O.C	= POINT OF COMMENCEMENT
PC	= POINT OF CURVATURE
PT	= POINT OF TANGENCY
COR	= CORNER
SEC	= SECTION
TWP	= TOWNSHIP
RGE	= RANGE

1" = 100'

0 50 100 200

GRAPHIC SCALE

T2 utility engineers

1-855-222-T2UE | WWW.T2UE.COM

Table Of Contents:

Sheet 1 of 3 - Legal description, Certification & Notes
Sheet 2&3 of 3 - Sketch

SKETCH AND LEGAL DESCRIPTION
NOT A SURVEY

SKETCH OF DESCRIPTION
JOB NUMBER: 06238-001-12

SCALE: 1"= 100'

SHEET: 3 OF 3

Traffic Impact Mitigation Plan

Road	Improvement	Timing
Ocoee Crown Point Parkway Extension (segment 1)	• Two-lanes of the four-lane section from the terminus of Ocoee Crown Point Parkway to the end of the proposed four-lane section	Completion required prior to issuance on a Certificate of Occupancy for a building within Tract 5 (High School).
	• Two-lanes from the terminus of four-lane section to the residential subdivision entrance	Completion required prior to issuance on a Certificate of Occupancy for a building within Tract 5 (High School).
Ocoee-Apopka Road/Ocoee Crown Point Parkway Intersection	• With construction of the Clarcona Ocoee Road project, Addition of SB right-turn lane	Upon completion of the Clarcona Ocoee Road project, the developer of the Westyn Bay project will construct this improvement.
	• With construction of the Clarcona Ocoee Road project, Addition of NB left-turn lane	Upon completion of the Clarcona Ocoee Road project, the developer of the Westyn Bay project will construct this improvement.
	• West approach including EB left-turn lane, two thru lanes and right-turn lane	Previously completed by the Westyn Bay developer.
	• With construction of the Clarcona Ocoee Road project, Addition of two WB thru lanes to serve the Ocoee Crown Point Parkway Extension	Upon completion of the Clarcona Ocoee Road project, the developer of the Westyn Bay project will construct this improvement.
	• With the construction of the Clarcona Ocoee Road project, Potential for meeting signal warrant requirements (the need for a signal should be analyzed later and installed when warranted)	Upon completion of the Clarcona Ocoee Road project, Completion is required prior to issuance on a Certificate of Occupancy for any building except within Tract 8, 9, 10 and 11.
Ocoee Crown Point Parkway Extension (segment 2)	• Final two-lanes of the four-lane section	Completion required prior to issuance on a Certificate of Occupancy for a building within Residential Tracts 2, 3 and 50.
	• Two-lanes from the residential subdivision entrance to Fullers Cross Road including signalization of West Orange Trail/Ocoee Crown Point Parkway intersection. (The need for a signal should be analyzed later and installed when warranted)	Completion required prior to issuance on a Certificate of Occupancy for a building within Tract 13 (Bus Depot/Townhomes).
Fullers Cross Road/Ocoee Crown Point Parkway Extension Intersection	• Addition of WB right-turn lane	Completion required prior to issuance on a Certificate of Occupancy for a building within Tract 13 (Bus Depot/Townhomes).
	• Addition of EB left-turn lane	Completion required prior to issuance on a Certificate of Occupancy for a building within Tract 13 (Bus Depot/Townhomes).
	• Potential for meeting signal warrant requirements (the need for a signal should be analyzed later and installed when warranted)	Completion required prior to issuance on a Certificate of Occupancy for a building within Tract 13 (Bus Depot/Townhomes).
	• Addition of separate SB left and right-turn lanes from Ocoee Crown Point Parkway	Completion required prior to issuance on a Certificate of Occupancy for a building within Tract 13 (Bus Depot/Townhomes).
Village Center Drive	• From Ocoee Crown Point Parkway to Ocoee Apopka Road	Completion required prior to issuance on a Certificate of Occupancy for a building within Tract 6A, 6B, 6C, 6D, 6E, 6F, 6G, 7A or 7B.
Ocoee-Apopka Road/West Orange Trail (Village Center Drive) Intersection	• Addition of SB right-turn lane	Completion required prior to issuance on a Certificate of Occupancy for a building within Tract 6A, 6B, 6C, 6D, 6E, 6F, 6G, 7A or 7B.
	• Addition of NB left-turn lane	Completion required prior to issuance on a Certificate of Occupancy for a building within Tract 6A, 6B, 6C, 6D, 6E, 6F, 6G, 7A or 7B.
	• West approach including EB left-turn lane and share thru/right-turn lane	Completion required prior to issuance on a Certificate of Occupancy for a building within Tract 6A, 6B, 6C, 6D, 6E, 6F, 6G, 7A or 7B.
	• East approach providing shared left/thru/right-turn lane	Completion required prior to issuance on a Certificate of Occupancy for a building within Tract 6A, 6B, 6C, 6D, 6E, 6F, 6G, 7A or 7B.
	• Signal and pedestrian crossing modifications to support vehicular traffic from side streets (the need for a signal should be analyzed later and installed when warranted)	Completion required prior to issuance on a Certificate of Occupancy for a building within Tract 6A, 6B, 6C, 6D, 6E, 6F, 6G, 7A or 7B.
Trail Road	• From West Orange Trail to Village Center Drive	Completion required prior to issuance on a Certificate of Occupancy for a building within Tract 6D, 6F, 6G, 7A, 7B, or 13 if developed for townhomes.
	• From West Orange Trail to end	Completion required prior to issuance on a Certificate of Occupancy for a building within Tract 6D, 7A, 7B or 13 if developed for townhomes.
Ocoee-Apopka Road/Fullers Cross Road Intersection	• Addition of left-turn lanes in the EB and NB approaches	Completion required prior to issuance on a Certificate of Occupancy for a building within Tract 9 or Tract 10.
	• Addition of a NB right-turn lane	Completion required prior to issuance on a Certificate of Occupancy for a building within Tract 9 or Tract 10.
	• Addition of left-turn lanes in the WB and SB approaches	Completion required prior to issuance on a Certificate of Occupancy for a building within Tract 9 or Tract 10.
	• Addition of EB left-turn lane	Completion required prior to issuance on a Certificate of Occupancy for a building within Tract 9 or Tract 10.
	• Improvements to signalization, if requirements warrant (the need for improved signalization should be analyzed later and installed when warranted)	Completion required prior to issuance on a Certificate of Occupancy for a building within Tract 9 or Tract 10.

Notes: The local two-lane road through the residential subdivision and the park area will be constructed for the limits of the residential or community park development. Completion of the entire roadway loop is not required for either one of the proposed developments. Sub-phases for all improvements may be permitted based upon proportionate traffic impacts for each project.

△1 △2 △4

ATTACHED HOUSING - RESIDENTIAL GUIDELINES

TOWNHOME CRITERIA MATRIX

Approximate 3/ Lot Size	Residential Building Setbacks: Front A	Side B	Side Corner C	Rear F	Garage Setbacks 1/: Front G	Side H	Zero Side I	Side Corner J	Rear Lane 4/ K	Porches: Side Corner M	Front N	Pool Setbacks 2/: Side O	Rear P	Encroachment Setback 5/ Q
(20'-29') x 90' Min.	10' Min.	0'&10' Min.	10' Min.	15' Min.	18' Min.	3' Min.	0'	5' Min.	18' Min.	3' Min.	5' Min.	N/A	N/A	2' Min.
(30'-39') x 90' Min.	10' Min.	0'&10' Min.	10' Min.	15' Min.	18' Min.	3' Min.	0'	5' Min.	18' Min.	3' Min.	5' Min.	3' Min.	3' Min.	2' Min.
(40'-45') x 90' Min.	10' Min.	0'&10' Min.	10' Min.	15' Min.	18' Min.	3' Min.	0'	5' Min.	18' Min.	3' Min.	5' Min.	3' Min.	3' Min.	2' Min.

NOTE: All setbacks are measured from principal structure to property line, unless otherwise noted.
1/ Side loaded alley garage minimum setback 10' from edge of pavement.
2/ Pool setbacks also apply to screen enclosures.
3/ Maximum impervious cover not to exceed 90% on individual lots.
4/ Rear lane garage setbacks measured from edge of pavement.
5/ Encroachment of a/c pads, chimneys, roof overhangs, utility equipment, bay windows and privacy walls may extend into yard setbacks.
6/ Building Setbacks for Townhomes shall be 25 feet for West Orange Trail.

DETACHED HOUSING - RESIDENTIAL GUIDELINES 7/

A - SINGLE-FAMILY LARGE LOT CRITERIA MATRIX

Approximate 3/ Lot Size	Residential Building Setbacks: Front A	Side B	Side Street C	Side Portico D	Side (Zero Lot) 4/ E	Rear F	Garage Setbacks 1/: Front G	Side H	Side (Zero Lot) I	Side Street J	Rear Lane 5/ K	Rear L	Porches: Side Street M	Front N	Pool Setbacks 2/: Side O	Rear P	Encroachment Setback 6/ Q
(66'-70') x 110' Min.	15' Min.	5' Min.	15' Min.	5' Min.	N/A	20' Min.	20' Min.	5' Min.	0'	15' Min.	18' Min.	5' Min.	10' Min.	10' Min.	5' Min.	10' Min.	2' Min.
(71'-100') x 110' Min.	15' Min.	5' Min.	15' Min.	5' Min.	N/A	20' Min.	20' Min.	5' Min.	0'	15' Min.	18' Min.	5' Min.	10' Min.	10' Min.	5' Min.	10' Min.	2' Min.
(>100') x 110' Min.	15' Min.	10' Min.	15' Min.	8' Min.	N/A	20' Min.	20' Min.	5' Min.	0'	15' Min.	18' Min.	5' Min.	10' Min.	10' Min.	5' Min.	10' Min.	2' Min.

B - SINGLE-FAMILY TRADITIONAL NEIGHBORHOOD DEVELOPMENT (TND) CRITERIA MATRIX

Approximate 3/ Lot Size	Residential Building Setbacks: Front A	Side B	Side Street C	Side Portico D	Side (Zero Lot) 4/ E	Rear F	Garage Setbacks 1/: Front G	Side H	Side (Zero Lot) I	Side Street J	Rear Lane 5/ K	Rear L	Porches: Side Street M	Front N	Pool Setbacks 2/: Side O	Rear P	Encroachment Setback 6/ Q
△4 (45'-49') x 120' Min.	10' Min.	5' Min.	10' Min.	3' Min.	5' or 0'&10' Min.	20' Min.	20' Min.	3' Min.	0'	15' Min.	18' Min.	5' Min.	10' Min.	5' Min.	3' Min.	5' Min.	2' Min.
(50'-54') x 100' Min.	10' Min.	5' Min.	10' Min.	3' Min.	5' or 0'&10' Min.	20' Min.	20' Min.	3' Min.	0'	15' Min.	18' Min.	5' Min.	10' Min.	5' Min.	3' Min.	5' Min.	2' Min.
(55'-65') x 100' Min.	10' Min.	5' Min.	10' Min.	3' Min.	5' or 0'&10' Min.	20' Min.	20' Min.	3' Min.	0'	15' Min.	18' Min.	5' Min.	10' Min.	5' Min.	3' Min.	5' Min.	2' Min.

NOTE: All setbacks are measured from principal structure to property line, unless otherwise noted.
1/ Side loaded alley garage minimum setback 10' from edge of pavement.
2/ Pool setbacks also apply to screen enclosures.
3/ Maximum impervious cover for Single Family Large Lots not to exceed 65% on individual lots.
Maximum impervious cover for Single Family Traditional Neighborhood not to exceed 75% on individual lots.
4/ Where zero-lot line architecture is utilized, 1 setback will be 0'.
5/ Rear lane garage setbacks measured from edge of pavement.
6/ Encroachment of a/c pads, chimneys, roof overhangs, utility equipment, bay windows and privacy walls may extend into yard setbacks.
7/ See Design Guidelines Book

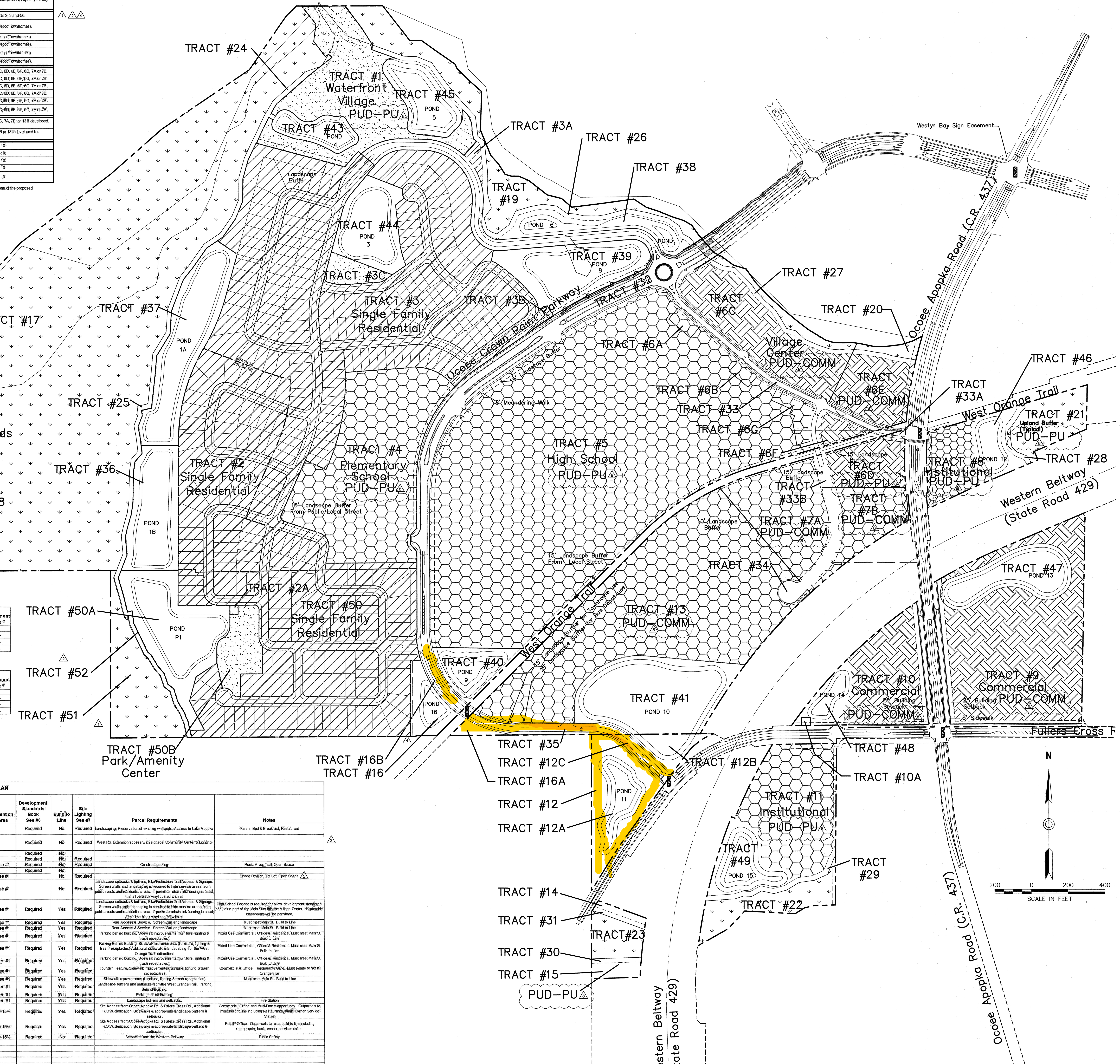

LEGEND

- Institutional
- Commercial
- Residential
- Park
- Wetland Buffer
- Wetland
- Property Line
- Setback Line
- ROW

△2 △4 MASTER DEVELOPMENT PLAN

Tract #	Land Use	Gross Floor Area	Building Height	Floor Area Ratio / Density	Building Setbacks: Front Setback	Side Setback	Street Setback See #8	Rear Setback	West Orange Trail Setback	Tract Acreage	Units	Parking Provided See #2	Retention Area	Development Standards Book See #6	Build to Line	Site Lighting See #7	Parcel Requirements	Notes
△4 1,43,45	Water Front Village	13,960	45 FT	1.0 FAR	25 FT	25 FT	25 FT	0 FT See #5		12.02		1/200 SF		Required	No	Required	Landscaping, Preservation of existing wetlands, Access to Lake Apopka	Marina, Bed & Breakfast, Restaurant
2	Single-Family Residential	N/A	35 FT	4.4 U/AC	See attached residential setbacks					35.67	156	2/Unit		Required	No	Required	West Rd. Extension access with signage, Community Center & Lighting	△2
2A	Lift Station			N/A						See #4				Required	No			
3	Single-Family Residential	N/A	35 FT	3.6U/AC	See attached residential setbacks					19.36	69	2/Unit		Required	No	Required		
3A	Community Park	N/A	35 FT	N/A	25 FT	25 FT	20 FT	25 FT		0.24			See #1	Required	No	Required	On street parking	Picnic Area, Trail, Open Space
3B	Lift Station			N/A						See #4				Required	No			
3C	Community Park	N/A	35 FT	N/A	25 FT	25 FT	20 FT	25 FT		0.88			See #1		No	Required		Shade Pavilion, Tot Lot, Open Space △5
4	Elementary School	N/A	45 FT	N/A	25 FT	15 FT	20 FT	15 FT		13.51			See #1		No	Required	Landscape setbacks & buffers, Bike/Pedestrian Trail Access & Signage. Screen walls and landscaping is required to hide service areas from public roads and residential areas. If perimeter chain link fencing is used, it shall be black vinyl coated with all	
5	High School	N/A	45 FT	N/A	Build To Line	15 FT	20 FT	15 FT	25 FT	51.21			See #1	Required	Yes	Required	Landscape setbacks & buffers, Bike/Pedestrian Trail Access & Signage. Screen walls and landscaping is required to hide service areas from public roads and residential areas. If perimeter chain link fencing is used, it shall be black vinyl coated with all	High School Façade is required to follow development standards book as a part of the Main St within the Village Center. No portable classrooms will be permitted.
6A	Workforce Education	5,400	45 FT	3.0 FAR	10 FT	0	10 FT	10 FT		0.28		1/250 SF	See #1	Required	Yes	Required	Rear Access & Service. Screen Wall and landscape	Must meet Main St. Build to Line
6B	Workforce Education	4,400	45 FT	3.0 FAR	10 FT	0	10 FT	10 FT		0.23		1/250 SF	See #1	Required	Yes	Required	Rear Access & Service. Screen Wall and landscape	Must meet Main St. Build to Line
6C	Village Center	54,900	45 FT	3.0 FAR	10 FT	0	10 FT	10 FT		5.73		1/250 SF	See #1	Required	Yes	Required	Parking behind building, Sidewalk improvements (furniture, lighting & trash receptacles)	Mixed Use Commercial, Office & Residential. Must meet Main St. Build to Line
6D	Village Center	24,800	45 FT	3.0 FAR	10 FT	0	10 FT	10 FT	10 FT	2.33		1/250 SF	See #1	Required	Yes	Required	Parking Behind Building. Sidewalk improvements (furniture, lighting & trash receptacles) Additional sidewalk & landscaping for the West Orange Trail redirection.	Mixed Use Commercial, Office & Residential. Must meet Main St. Build to Line
6E	Village Center	28,600	45 FT	3.0 FAR	10 FT	0	10 FT	10 FT	10 FT	2.98		1/250 SF	See #1	Required	Yes	Required	Parking behind building, Sidewalk improvements (furniture, lighting & trash receptacles)	Mixed Use Commercial, Office & Residential. Must meet Main St. Build to Line
6F	Village Center	5,700	45 FT	3.0 FAR	10 FT	0	10 FT	10 FT	10 FT	0.60		1/250 SF	See #1	Required	Yes	Required	Fountain Feature, Sidewalk improvements (furniture, lighting & trash receptacles).	Commercial & Office. Restaurant / Café. Must Relate to West Orange Trail
6G	Workforce Education	9,600	45 FT	3.0 FAR	10 FT	0	10 FT	10 FT	10 FT	0.50		1/250 SF	See #1	Required	Yes	Required	Sidewalk improvements (furniture, lighting & trash receptacles)	Must meet Main St. Build to Line
7A	Workforce Education	50,200	45 FT	3.0 FAR	10 FT	0	10 FT	10 FT	10 FT	5.24		1/250 SF	See #1	Required	Yes	Required	Landscape buffers and setbacks from the West Orange Trail. Parking Behind Building.	
7B	Workforce Education	27,000	45 FT	3.0 FAR	10 FT	0	10 FT	10 FT		2.82		1/250 SF	See #1	Required	Yes	Required	Parking behind building.	
8	Institutional	11,700	60 FT	1.0 FAR	25 FT	25 FT	25 FT	25 FT	25 FT	2.45		1/250 SF	See #1	Required	Yes	Required	Landscape buffers and setbacks.	Fire Station
9	Commercial / Mixed Use Opportunity	139,500	35 FT	3.0 FAR	25 FT	0	15 FT	20 FT		14.56		1/200 SF	10-15%	Required	Yes	Required	Site Access from Ocoee Apopka Rd. & Fullers Cross Rd., Additional R.O.W. dedication. Sidewalks & appropriate landscape buffers & setbacks.	Commercial, Office and Multi-Family opportunity. Outparcels to meet build to line including Restaurants, bank, Corner Service Station
10	Commercial / Office	49,000	35 FT	3.0 FAR	25 FT	0	15 FT	20 FT		5.64		1/200 SF	10-15%	Required	Yes	Required	Site Access from Ocoee Apopka Rd. & Fullers Cross Rd., Additional R.O.W. dedication. Sidewalks & appropriate landscape buffers & setbacks.	Retail / Office. Outparcels to meet build to line including restaurants, bank, corner service station.
11	Institutional	N/A	35 FT	3.0 FAR	25 FT	25 FT	25 FT	20 FT		6.96		1/250 SF	10-15%	Required	No	Required	Setbacks from the Western Beltway	Public Safety.
12	R.O.W. & Retention									N/A See#3								
12A	Retention																	
12B	Retention																	
12C	R.O.W.																	
12D	Open Space																	
13	Bus Depot / Townhomes			10 U/AC	See residential attached dwelling guidelines - Bldg. setback is 50' for Bus Depot Use					21.74	217	2/Unit		Required	Yes	Required	Landscape Buffers and Setbacks from adjacent parcels & the West Orange Trail.	Optional Landuse: Bus Depot for school board use. Townhomes if the Bus Depot is not required.
14-16A	Open Space									0.98								
16B	Road Extension									0.56				Required				
17	Sovereign Wetland									34.31								
△2 18-23,51	Wetland									61.53								
24-31, 52	Wetland Buffer									5.36								
△4 32,33, 33A-35	R.O.W.									15.12				Required		Required	Street Trees, Lighting & on street parking on indicated R.O.W. tracts.	
△2 16, 36-41, 44, 46-49, 50A	Retention									44.57							Possible Fountain Feature location where indicated.	
△2 50	Single-Family Residential	N/A	35 FT	4.9 U/AC	See attached residential setbacks					22.00	108	2/Unit		Required	No	Required	Ocoee Crown Point Parkway access with signage, Community Center & Lighting	Community Center: 1000 SF Mtg. Room, Tot Lot & Open Space Only one community meeting room shall be required between Tracts 2, 3 & 50.
50B	Community Park	N/A	35 FT	N/A	25 FT	25 FT	20 FT	25 FT		1.99			See #1		No	Required		
	TOTAL ACREAGE									391.37								

#1: Retention in master retention system. #2: Minimum parking to be provided at 1/250 SF of commercial / office / workforce education. Shared parking shall be permitted upon submission of a traffic study or shared parking analysis. #3: Owned by OCPS. Tracts will be used for retention, detention, R.O.W., Open Space & Signage only. #4: Acreages are included within parent tracts. Location of said tracts are subject to change. #5: Rear setback is 0 FT from the Wetland Buffer. #6: All Commercial & Public use parcels shall be controlled primarily by Ordinance #99-23 (as amended from time to time). The tracts labeled 'Required' shall follow the guidelines set forth in the Crown Point Development Standards Book. #7: Site Lighting shall be controlled by Ordinance #99-23 (as amended from time to time) & the guidelines set forth in the Crown Point Development Standards Book. The tracts adjacent to the Western Beltway shall have a min. building setback of 75 FT from the Western Beltway R.O.W. line.

The City of Ocoee has obtained a Land Acquisition Grant to assist in acquiring a portion of the subject property to establish a park area, part of which would be dedicated to boating related activities (approximately 10 acres). For the purpose of that Grant, the following tracts have been identified as contributing to the required 10 acres for this purpose: Tract '1' (8.18 acres), Tract '43' (1.46 acres) and Tract '45' (2.38 acres). △4

vhb
Vanasse Hangen Brustlin, Inc.
225 E. Robinson Street, Suite 300
Orlando, Florida 32801
407.839.4006 • FAX 407.839.4008
Certificate of Authorization Number FL #3932

The Center of Good Living OCOEE | OCPS

No.	Revision	Date	Appvd.
8	DRC Comments	5-27-16	JRH
7	DRC Comments	9-15-15	JRH
6	DRC Comments	8-26-15	JRH
5	Revised Plans	8-7-15	JRH
4	Revised Plans	6-11-15	JFK
3	City Review 6-15-04	6-16-04	JFK
2	DRC COMMENTS 4-21-04	5-27-04	JFK
1	Addition of Poer Property	3-5-04	JFK

Designed by | Drawn by | Checked by
CAD checked by | Approved by
Scale 1" = 200' | Date 05/22/02

Project Title
Ocoee Crown Point PUD
PUD Land Use Plan/PSP

Ocoee, Florida
Issued for

Not Approved for Construction
Drawing Title

PUD Land Use Plan

Drawing Number
C005

Sheet 5 of 28

Project Number 61975.00

05-psp-PUD-LUP.dwg

Saved Friday, June 10, 2016 8:51:05 AM CGIERLACH Plotted Friday, June 10, 2016 8:52:23 AM Gierlach, Catherine

STAFF REPORT

Meeting Date: January 16, 2024
Item #: 6

Contact Name: Michael Rumer
Contact Number: Ext. 1018

Department Director: Michael Rumer
City Manager: Robert Frank

Subject: Approval of Resolution Relating to the City of Ocoee's Pending Legislation to Qualify for Affordable Housing Projects Under the Live Local Act. (Development Services Director Rumer)

Background Summary:

In 2023, Senate Bill 102, known as the "Live Local Act" was signed into law. The primary purpose of the Bill is an effort to increase the supply of affordable housing in the State of Florida. The Live Local Act requires municipalities to allow multifamily and mixed-use residential development in any area zoned for “commercial, industrial, or mixed-use” if at least 40 percent of the residential units in a proposed multifamily rental development are, for a period of at least 30 years, “affordable” as defined in s. 420.0004, Florida Statutes, and at least 65 percent of the total square footage of any mixed-use project is used for residential purposes, and the project otherwise “meets all other development regulations and requirements” for multifamily development. Among other things, the Live Local Act preempts local comprehensive plans and zoning code provisions with regard to maximum permitted height and density.

The City is moving forward with updates to the Ocoee Land Development Code in order to articulate the requirements of the Live Local Act more clearly. The update will require Public Hearings with the City's Planning and Zoning Commission and City Commission. The attached resolution puts the public and all parties on notice that the City is considering a Land Development Code amendment that implements the Live Local Act, including a procedure for administrative approval of qualifying projects, requirements for the filing of deed restrictions, and annual certification attesting to compliance with the Live Local Act for 30 years from issuance of a Certificate of Occupancy; requirements for the equivalent treatment of all market rate and affordable dwelling units, and provisions for the City’s enforcement.

Therefore, pursuant to the pending legislation doctrine (or pending ordinance doctrine) set forth in *Smith v. City of Clearwater*, 383 So. 2d 681 (Fla. 2d DCA 1980), the City declares and implements the pending ordinance doctrine concerning the zoning and land development regulations governing real properties and proposed mixed-use and multifamily projects located within the City limits.

Issue:

Should the Honorable Mayor and City Commissioners approve a Resolution Relating to the City of Ocoee's Pending Legislation to Qualify for Affordable Housing Projects Under the Live Local Act?

Recommendations:
Staff recommends the Honorable Mayor and City Commissioners approve a Resolution Relating to the City of Ocoee's Pending Legislation to Qualify for Affordable Housing Projects Under the Live Local Act.

Attachments:
1. Live Local Act Resolution of Pending Legislation

Financial Impacts:
None

Type of Item: Consent

RESOLUTION _____

A RESOLUTION OF THE CITY COMMISSION OF THE CITY OF OCOEE, FLORIDA, PROVIDING NOTICE TO THE PUBLIC OF PENDING LEGISLATION TO PROVIDE FOR ADMINISTRATIVE APPROVAL OF QUALIFYING AFFORDABLE HOUSING PROJECTS UNDER THE LIVE LOCAL ACT, MANDATING DEED RESTRICTIONS AND ANNUAL CERTIFICATION OF COMPLIANCE WITH THE REQUIREMENT TO PROVIDE AFFORDABLE HOUSING UNDER THE LIVE LOCAL ACT, REQUIRING THE EQUIVALENT TREATMENT OF MARKET RATE AND AFFORDABLE HOUSING UNITS IN THE SAME PROJECT, AND PROVISIONS FOR ENFORCEMENT THEREOF.

WHEREAS, Senate Bill 102, known as the "Live Local Act," codified as to municipalities at Section 166.04151 *et seq.*, Florida Statutes, is an effort to increase the supply of affordable housing in the State of Florida; and

WHEREAS, the Live Local Act requires municipalities to allow multifamily and mixed use residential development in any area zoned for "commercial, industrial, or mixed use" if at least 40 percent of the residential units in a proposed multifamily rental development are, for a period of at least 30 years, "affordable" as defined in s. 420.0004, Florida Statutes, and at least 65 percent of the total square footage of any mixed use project is used for residential purposes, and the project otherwise "meets all other development regulations and requirements" for multifamily development;

WHEREAS, the Live Local Act preempts local comprehensive plans and zoning code provisions with regard to maximum permitted height and density; and

WHEREAS, the Live Local Act leaves open to the discretion of municipalities under their broad Constitutional and statutory Home Rule authority to require, before issuance of a building permit, and for 30 years after issuance of a Certificate of Occupancy, proper documentation and certification to ensure that a developer invoking privileges under the Live Local Act actually provides affordable housing as set forth in the Live Local Act; and

WHEREAS, the Live Local Act leaves open to the discretion of municipalities under their broad Home Rule authority the right to impose penalties for non-compliance; and

WHEREAS, the City wishes to place the public and all parties on notice that the City is considering a Land Development Code amendment that implements the Live Local Act, including a procedure for administrative approval of qualifying projects, requirements for the filing of deed restrictions and annual certification attesting to compliance with the Live Local Act for 30 years from issuance of a Certificate of Occupancy; requirements for the equivalent treatment of all market rate and affordable dwelling units, and provisions for the City's enforcement;

WHEREAS, pursuant to the pending legislation doctrine (or pending ordinance doctrine) set forth in *Smith v. City of Clearwater*, 383 So. 2d 681 (Fla. 2d DCA 1980), the City declares and implements the pending ordinance doctrine concerning the zoning and land development regulations governing real properties and proposed mixed-use and multi-family projects located within the City limits; and

WHEREAS, property owners and developer should be aware that provisions of pending ordinances not yet adopted by the City may be applied to any proposed development or to any development application delayed by the City until the passage of the pending ordinance; and

WHEREAS, the City Commission in good faith determines that this Resolution is in the best interest of the City and its residents and promotes the health, safety, and welfare of the public.

NOW, THEREFORE, be it resolved by the City Commission of the City of Ocoee, Florida that:

SECTION 1. The foregoing recitals are re-incorporated herein as if set forth at length;

SECTION 2. That the City Commission of the City of Ocoee hereby provides notice of the "pending legislation doctrine," and directs staff to advertise for public hearing, an amendment to the City's Land Development Code to provide a procedure for administrative approval of qualifying projects under the Live Local Act, a requirement for the filing of deed restrictions requiring the provision of affordable housing for 30 years, a requirement for annual certification of compliance with the Live Local Act; requirements for the equivalent treatment of all market rate and affordable dwelling units, and providing for the City's enforcement of the ordinance.

PASSED AND ADOPTED at a regular meeting of the City Commission of the City of Ocoee held in City Hall, Ocoee on this ____day of _____ 2024.

APPROVED:

ATTEST:

CITY OF OCOEE, FLORIDA

_____
Melanie Sibbitt, City Clerk

_____
Rusty Johnson, Mayor

(SEAL)

APPROVED BY THE OCOEE CITY COMMISSION ON _____, 2024 UNDER AGENDA ITEM NO._____

FOR USE AND RELIANCE ONLY BY THE CITY OF OCOEE, FLORIDA; APPROVED AS TO FORM AND LEGALITY
this ___ day of _____, 2024.

FISHBACK DOMINICK

By:_____
Richard S. Geller
City Attorney

S:\AKA\CLIENTS\Ocoee, City of\Planning, Zoning and Development O164-27485\Live Local Act\Live Local Act Resolution of Pending Legislation.doc

STAFF REPORT

Meeting Date: January 16, 2024
Item #: 7

Contact Name: Mark Johnson
Contact Number: Ext. 5002

Department Director: Mark Johnson
City Manager: Robert Frank

Subject: Approval of Change Order No. 1 to Ocoee Action Sports Park Phase 3. (Parks and Recreation Director Johnson)

Background Summary:

Construction of Ocoee Action Sports Park Phase 3 is set to begin the last week of January. In evaluating the design of the park, staff feels it is important to emphasize the younger users of the park by upgrading equipment to make this park a destination for all age groups and families. American Ramp Company was asked to provide a quote to upgrade the bicycle playground area. American Ramp Company also provided a quote for the Payment and Performance Bonds, that are required for this project to start. After reviewing the quotes, the Parks and Recreation team feels this addition to the park will be welcomed by the community and have American Ramp Company complete the project.

Issue:

Should the Honorable Mayor and City Commissioners approve Change Order No.1 to Ocoee Action Sports Park Phase 3?

Recommendations:

Staff recommends the Honorable Mayor and City Commissioners approve Change Order No.1 to Ocoee Action Sports Park Phase 3.

Attachments:

1. American Ramp Company Contract Change Order
2. City of Ocoee Change Order No. 1

Financial Impacts:

The change order will cause an increase of $14,430.14 to the contract price, bringing the total contract price to $304,430.14. The $14,430.14 is available in the Recreation Impact Budget Account #110-572-00-6302.

Type of Item: Consent

AMERICAN RAMP COMPANY

Contract Change Order

Date: 1/10/2024
CO#: 1

Owner:	City of Ocoee	Project ID/PO #:	23122115
Address:	175 N Bluford Avenue	Project Name:	Vandergift Central Park Bike Park
City, State, Zip:	Ocoee, FL 34761	Superintendent:	

This change order modifies or amends the provisions of the contract/order dated 12/8/2023 by and between the owner and American Ramp Company, Inc.. American Ramp Company, Inc. is hereby directed to make the following change(s) in the performance of the contract work:

Description of Work

Description	Unit	Quantity	Unit Price	Change Order Cost
100% Payment and				$ -
Performance Bonds				$ -
$5,800.00	1	1	$ 5,800.00	$ 5,800.00
				$ -
Rerouting the return trail and				$ -
upgrading bicycle playground	1	1	$ 8,630.14	$ 8,630.14
				$ -
				$ -
				$ -
Total of this Change Request				**$ 14,430.14**

As a result of the change(s) described above, the amount of payable to the contractor hereunder is modified as follows:

[ ] No Change [x] Increase [ ] Decrease Amount = $14,430.14

As a result of the change(s) described above, the time permitted for this contract is hereby modified as follows:

[x] No Change [ ] Increase [ ] Decrease Amount = _____ days

Except as set forth above, all terms & provisions of the contract and all prior Change Orders remain in full force and effect.

Original Contract	$ 290,000.00
Prior Changes	$ -
Amount of this Change	$ 14,430.14
Total Revised contract	$ 304,430.14

Execution of this Change Order by both parties constitutes a binding agreement that no adjustment in compensation or time of performance shall be made as a result of the foregoing change(s), except as provided herein.

Accepted and Agreed:

ARC: _____ Owner: _____

Title: CEO Title: _____

Date: 1/10/2024 Date: _____

American Ramp Company
601 McKinley Avenue, Joplin, MO 64801
Phone: 417-206-6816, Fax: 417-206-6888

CITY OF OCOEE
1 N. Bluford Avenue
Ocoee, Florida 34761

This Change Order Requires Action by the City Commission

VANDERGRIFT CENTRAL PARK SKATE PARK
CHANGE ORDER NO. _1_

DATE: _____1/10/24_____ PURCHASE ORDER:_____

The following changes are hereby made to the CONTRACT DOCUMENTS.

Original CONTRACT PRICE	$290,000.00
Current CONTRACT PRICE ADJUSTED by previous CHANGE ORDERS	$290,000.00
Net Increase (Decrease) Resulting from this CHANGE ORDER	**$14430.14**
The current CONTRACT PRICE including this CHANGE ORDER	**$304430.14**
Original CONTRACT COMPLETION DATE:	4/25/2025
Current CONTRACT COMPLETION DATE adjusted by previous CHANGE ORDERS	4/25/2025
Net Increase Resulting from this CHANGE ORDER	**0 days**
Current CONTRACT COMPLETION DATE including this CHANGE ORDER	**4/25/2025**

CHANGES ORDERED:

I. REQUIRED CHANGES

Additional fees are needed for the Skate Park Phase 3 project for the rerouting of the return trail and upgrading bicycle playground and the Performance Bonds. Per the contract, American Ramp Company will complete Phase 3, by April/May 2025.

II. JUSTIFICATION

Phase 3 will be requiring additional funds for rerouting the return trail and upgrading bicycle playground at the cost of $8,630.14. Additional fees for the Performance Bonds are needed in the amount of $5,800.00.

III. NARRATIVE OF NEGOTIATIONS

IV. PAYMENT

Payment to increase the contract total will be funded from the Fiscal Year 21/22 Concessions Stand Improvements Project with the Capital Budget Acct. #110-572-00-6302.

V. APPROVAL AND CHANGE AUTHORIZATION

The original project and funding allocation was established by issuance of a CITY purchase order, subject to the terms and conditions contained in the CITY's solicitation, Project Manual, Drawings, Specifications, and/or the CONTRACTOR's service and price proposal, which collectively form the terms of an agreement between the CITY and the CONTRACTOR for the performance of the Work. This proposed change to the agreement requires approval by the City Commission under the CITY's Purchasing Rules and Regulations and is consistent with any prior action by the City Commission to award the Work to the CONTRACTOR. It is expressly understood and agreed that the approval of the Change Order shall have no effect on the original agreement other than matters expressly provided herein.

CONTRACTOR acknowledges, by its execution and acceptance of this Change Order, that the adjustments in contract price and time shown hereon constitute full and complete compensation and satisfaction for all costs and modifications of performance time incurred by the CONTRACTOR as a result of this Change Order. No other claim for increased costs of performance or modifications of time will be granted by the CITY for the Work covered by this Change Order. The CONTRACTOR hereby waives and releases any further claims for cost or time against the CITY arising from or relating to the matters or Work set forth or contemplated by this Change Order.

[Balance of this page was left blank intentionally]

VANDERGRIFT CENTRAL PARK SKATE PARK
CHANGE ORDER NO. _1_

RECOMMENDED BY:

CITY OF OCOEE, FLORIDA

By: _____
Signature

Date: _____

Title: _____

ACCEPTED BY:

[contractor name]

By: _____
Signature

Date: 1-11-2024

Title: CEO

APPROVED BY:

CITY OF OCOEE, FLORIDA

By: _____
Rusty Johnson, Mayor

Date: _____

Attest: _____
Melanie Sibbitt, City Clerk

FOR USE AND RELIANCE ONLY BY THE CITY OF OCOEE, APPROVED AS TO FORM AND LEGALITY THIS _____ DAY OF _____, 20___

By: _____
City Attorney

APPROVED BY THE CITY OF OCOEE COMMISSION IN A MEETING HELD ON _____, 20___ UNDER AGENDA ITEM NO. _____.

VANDERGRIFT CENTRAL PARK SKATE PARK
CHANGE ORDER NO. _1_

STAFF REPORT

Meeting Date: January 16, 2024
Item #: 8

Contact Name: Olena Stokych, Joyce Tolbert
Contact Number: Ext. 1521, Ext. 1516

Department Director: Rebecca Roberts
City Manager: Robert Frank

Subject: Approval to Award Invitation to Bid (ITB) #24-002 W. Oakland Ave Reconstruction. (Procurement Manager Tolbert)

Background Summary: The City of Ocoee, Florida (City), in conformance with the drawings and specifications prepared by CPH Consulting, solicited bids from qualified contractors to provide all construction work for the ITB #24-002 W. Oakland Ave Reconstruction Project. The Project includes all items necessary for the furnishing, delivering, and installing of all materials, equipment, incidentals, and services, including all labor for the work.

The W. Oakland Ave Reconstruction Project is a complete demolition and reconstruction of W. Oakland Ave between Taylor Street and Bluford Avenue in the City of Ocoee. The new roadway will consist of a two-way street divided by a 22-foot median with a 12-foot trail in the center of the median. The construction includes curb and gutter, new 12-foot asphalt roadway lanes, reconstructed stormwater system, potable water improvements, gravity sewer improvements, brick on-street parking, and 8-foot sidewalks. The project shall include removal of existing City utilities, roadway reconstruction, removal and replacement of driveways and curb, sidewalks, sodding and other restoration as may be required.

The ITB was publicly advertised on November 5, 2023, and opened on December 5, 2023. There were a total of six (6) bids received ranging from $3,033,893.00 to $4,636,277.69. All bids are available in the Finance Department for review. The Public Works and Finance Departments reviewed the bids received and all were considered responsive. Staff recommends awarding the bid to J Malever Construction Company for $3,033,893.00 as the most responsive and responsible bidder, which came in $746,413.62 below the engineer's estimated construction cost of $3,780,306.62, per the attached recommendation from Milen Womack, City Engineer.

The following table is a listing of the bids received:

	Bidder	**Total Bid**
1.	**J Malever Construction Company**	**$3,033,893.00**
2.	American Persian Engineering and Construction LLC DBA (APEC LLC)	$3,557,177.00
3.	Southern Development & Construction, Inc	$3,907,620.00
4.	Cathcart Construction Company - Florida, LLC	$4,203,529.00
5.	SanPik Inc	$4,285,745.23
6.	Atlantic Civil Constructors Corporation	$ 4,636,277.69

Issue:
Should the Honorable Mayor and City Commissioners award the bid for W. Oakland Ave. Reconstruction Project to J Malever Construction Company, as recommended by the City Engineer?

Recommendations:
Staff recommends the Honorable Mayor and City Commissioners award ITB #24-002 W. Oakland Ave. Reconstruction Project and authorize the Mayor, City Clerk, and Staff to execute the required contract documents once the required insurance/bonds are received. Staff also recommends the City Manager be authorized to approve change orders to this contract up to the limit of his purchasing authority for each change order, and up to the budgeted amount for this project for all change orders.

Attachments:
1. Memo Award Recommendation ITB #23-002 W. Oakland Reconstruction from City Engineer
2. Bid Tabulation - ITB #24-002 W. Oakland Ave Reconstruction
3. J Malever Construction CompanyBid
4. American Persian Engineering and Construction LLC DBA APEC LLC/Bid
5. Southern Development & Construction, Inc/Bid
6. ITB #24-002 W. Oakland Avenue Reconstruction /Solicitation
7. W. Oakland Ave Final Plan Set
8. Addendum 1
9. Addendum 2
10. Addendum 3

Financial Impacts:
The current estimated budget is $4,447,384.78, which includes construction, engineering and other project expenses.

Type of Item: Consent

ocoee
florida

Mayor
Rusty Johnson

Commissioners
Scott Kennedy
District 1

Rosemary Wilsen
District 2

Richard Firstner
District 3

Ages Hart
District 4

City Manager
Robert D. Frank

MEMORANDUM

Date: December 12, 2023

To: Olena Stokych, Purchasing Agent

From: Milen Womack, City Engineer

RE: Contract Award Recommendation.
ITB No. 24-002 W. Oakland Ave Reconstruction

Ocoee Public Works Team
Improving a great community

Public Works recommends award of the W. Oakland Ave Reconstruction project, ITB No. 24-002, to J Malever Construction Company, of Groveland, Florida, for the low bid of $3,033,893.00. The City received six (6) qualified bids from interested contractors ranging from $3.03 million to $4.63 million. J. Malever Construction has been in business since 1999 and has successfully completed previous projects for the City especially in our Downtown Area. The contract is adequately funded through the Public Works Department and Utilities Department project budgets.

City of Ocoee ▪ 301 Maguire Road ▪ Ocoee, Florida 34761
Phone: (407) 905-3170 ▪ www.ocoee.org

BID TABULATION
12/05/2023 2:00 P.M.
ITB #24-002 W. Oakland Ave Reconstruction

BID TAB		American Persian Engineering and Construction LLC DBA APEC LLC		Atlantic Civil Constructors Corporation		Cathcart Construction Company - Florida, LLC		**J Malever Construction Company**		SanPik Inc		Southern Development & Construction, Inc	
Acknowledgement of Addendum #1, 2, 3		✓		✓		✓		✓		✓		✓	
Bid Security		Bid Bond		Bid Bond		Bid Bond		**Bid Bond**		Bid Bond		Bid Bond	
License Check		Active		Active		Active		**Active**		Active		Active	
Required Forms		✓		✓		Requested missing E-Verify/received		✓		✓		✓	
DESCRIPTION	**QTY.**	**UNIT PRICE**	**TOTAL PRICE**	**UNIT PRICE**	**TOTAL PRICE**	**UNIT PRICE**	**TOTAL PRICE**	**UNIT PRICE**	**TOTAL PRICE**	**UNIT PRICE**	**TOTAL PRICE**	**UNIT PRICE**	**TOTAL PRICE**
MOBILIZATION	1	$400,000.00	$400,000.00	$744,023.20	$744,023.20	$210,000.00	$210,000.00	**$150,000.00**	**$150,000.00**	$214,000.00	$214,000.00	$180,000.00	$180,000.00
MAINTENANCE OF TRAFFIC	1	$10,000.00	$10,000.00	$243,102.66	$243,102.66	$189,000.00	$189,000.00	**$96,000.00**	**$96,000.00**	$275,000.00	$275,000.00	$290,000.00	$290,000.00
SEDIMENT BARRIER	1678	$4.00	$6,712.00	$8.70	$14,598.60	$5.00	$8,390.00	**$6.00**	**$10,068.00**	$7.00	$11,746.00	$6.00	$10,068.00
INLET PROTECTION SYSTEM	5	$150.00	$750.00	$177.32	$886.60	$775.00	$3,875.00	**$750.00**	**$3,750.00**	$1,650.00	$8,250.00	$800.00	$4,000.00
CLEARING & GRUBBING	1.87	$250,000.00	$467,500.00	$230,197.35	$430,469.04	$215,000.00	$402,050.00	**$220,000.00**	**$411,400.00**	$275,000.00	$514,250.00	$216,786.63	$405,391.00
REMOVAL OF EXISTING CONCRETE	978	$20.00	$19,560.00	$25.60	$25,036.80	$31.00	$30,318.00	**$40.00**	**$39,120.00**	$44.00	$43,032.00	$50.00	$48,900.00
MAILBOX, RELOCATE	14	$120.00	$1,680.00	$297.16	$4,160.24	$1,175.00	$16,450.00	**$400.00**	**$5,600.00**	$132.00	$1,848.00	$1,200.00	$16,800.00
WEIGH SCALE REMOVAL & RESTORATION	1	$40,000.00	$40,000.00	$10,135.45	$10,135.45	$55,000.00	$55,000.00	**$30,000.00**	**$30,000.00**	$10,000.00	$10,000.00	$24,500.00	$24,500.00
REGULAR EXCAVATION	2179	$15.00	$32,685.00	$80.54	$175,496.66	$65.00	$141,635.00	**$15.00**	**$32,685.00**	$20.00	$43,580.00	$30.00	$65,370.00
EMBANKMENT	195	$10.00	$1,950.00	$315.55	$61,532.25	$105.00	$20,475.00	**$15.00**	**$2,925.00**	$40.00	$7,800.00	$80.00	$15,600.00
TYPE B STABALIZATION (LBR40)(12")	4050	$10.00	$40,500.00	$32.48	$131,544.00	$35.00	$141,750.00	**$10.00**	**$40,500.00**	$33.00	$133,650.00	$14.00	$56,700.00
OPTIONAL BASE GROUP 09 CRUSHED CONC. (10")	3205	$40.00	$128,200.00	$56.65	$181,563.25	$65.00	$208,325.00	**$35.00**	**$112,175.00**	$41.00	$131,405.00	$40.00	$128,200.00
MILLING EXISTING ASPHALT PAVEMENT, 1" AVG DEPTH	207	$30.00	$6,210.00	$50.00	$10,350.00	$101.00	$20,907.00	**$55.00**	**$11,385.00**	$49.00	$10,143.00	$45.00	$9,315.00
SUPERPAVE ASHPALT CONC. TRAFFIC C, 1"	11	$500.00	$5,500.00	$330.00	$3,630.00	$945.00	$10,395.00	**$275.00**	**$3,025.00**	$1,200.00	$13,200.00	$550.00	$6,050.00
SUPERPAVE ASHPALT CONC. TRAFFIC C, 2"	291	$500.00	$145,500.00	$448.65	$130,557.15	$245.00	$71,295.00	**$275.00**	**$80,025.00**	$445.00	$129,495.00	$240.00	$69,840.00
INLETS, CURB, TYPE 9, P BOT <10'	8	$10,500.00	$84,000.00	$9,370.60	$74,964.80	$11,250.00	$90,000.00	**$5,000.00**	**$40,000.00**	$7,633.00	$61,064.00	$10,400.00	$83,200.00
INLETS, CURB, TYPE 9, J BOT, <10'	1	$12,500.00	$12,500.00	$33,157.81	$33,157.81	$13,375.00	$13,375.00	**$45,000.00**	**$45,000.00**	$9,900.00	$9,900.00	$13,200.00	$13,200.00
INLETS, CURB, TYPE 9, PARTIAL	1	$9,500.00	$9,500.00	$3,220.92	$3,220.92	$9,350.00	$9,350.00	**$5,200.00**	**$5,200.00**	$6,650.00	$6,650.00	$8,500.00	$8,500.00
INLETS, VALLEY GUTTER, P BOTTOM <10'	6	$10,600.00	$63,600.00	$13,718.76	$82,312.56	$18,525.00	$111,150.00	**$7,400.00**	**$44,400.00**	$15,620.00	$93,720.00	$15,700.00	$94,200.00
INLETS, VALLEY GUTTER, PARTIAL	2	$10,000.00	$20,000.00	$3,023.89	$6,047.78	$9,250.00	$18,500.00	**$6,400.00**	**$12,800.00**	$6,682.00	$13,364.00	$5,500.00	$11,000.00
MANHOLES, J-8, <10'	3	$5,000.00	$15,000.00	$19,134.38	$57,403.14	$22,575.00	$67,725.00	**$15,400.00**	**$46,200.00**	$19,887.00	$59,661.00	$16,400.00	$49,200.00
MANHOLE, ADJUST	3	$5,000.00	$15,000.00	$2,041.96	$6,125.88	$2,950.00	$8,850.00	**$750.00**	**$2,250.00**	$6,050.00	$18,150.00	$2,000.00	$6,000.00
PIPE CULVERT, RCP, ROUND, 24" S/CD	1133	$130.00	$147,290.00	$227.70	$257,984.10	$251.00	$284,383.00	**$135.00**	**$152,955.00**	$300.00	$339,900.00	$180.00	$203,940.00
PIPE CULVERT, RCP, ROUND, 30" S/CD	204	$142.00	$28,968.00	$326.14	$66,532.56	$325.00	$66,300.00	**$160.00**	**$32,640.00**	$385.00	$78,540.00	$250.00	$51,000.00
PIPE CULVERT, RCP, OTHER SHAPE - ELIP/ARCH, 34"X53" S/CD	78	$145.00	$11,310.00	$605.68	$47,243.04	$720.00	$56,160.00	**$425.00**	**$33,150.00**	$618.00	$48,204.00	$700.00	$54,600.00
CURB AND GUTTER, TYPE F	1069	$65.00	$69,485.00	$47.30	$50,563.70	$35.00	$37,415.00	**$45.00**	**$48,105.00**	$57.00	$60,933.00	$40.00	$42,760.00
CURB AND GUTTER, TYPE F, DROP CURB	681	$60.00	$40,860.00	$47.97	$32,667.57	$35.00	$23,835.00	**$42.00**	**$28,602.00**	$54.00	$36,774.00	$45.00	$30,645.00

BID TABULATION
12/05/2023 2:00 P.M.
ITB #24-002 W. Oakland Ave Reconstruction

CONCRETE CURB, TYPE B	1,798	$50.00	$89,900.00	$40.04	$71,991.92	$35.00	$62,930.00	**$52.00**	**$93,496.00**	$65.00	$116,870.00	$40.00	$71,920.00
CONCRETE CURB, TYPE D	711	$50.00	$35,550.00	$30.45	$21,649.95	$32.00	$22,752.00	**$48.00**	**$34,128.00**	$61.00	$43,371.00	$35.00	$24,885.00
CONCRETE, SIDEWALK, CURB RAMP, 4" THICK	1,858	$75.00	$139,350.00	$58.96	$109,547.68	$79.00	$146,782.00	**$105.00**	**$195,090.00**	$123.00	$228,534.00	$120.00	$222,960.00
CONCRETE, DRIVEWAYS, TRAIL, SEATING PADS, 6" THICK	1,500	$90.00	$135,000.00	$87.54	$131,310.00	$105.00	$157,500.00	**$150.00**	**$225,000.00**	$165.00	$247,500.00	$160.00	$240,000.00
PAVERS, ARCHITECTURAL, ROADWAY W/ IN-SITU INFILROMETER (6)	701	$140.00	$98,140.00	$159.43	$111,760.43	$141.00	$98,841.00	**$160.00**	**$112,160.00**	$144.00	$100,944.00	$200.00	$140,200.00
DETECTABLE WARNINGS	416	$40.00	$16,640.00	$30.69	$12,767.04	$49.00	$20,384.00	**$40.00**	**$16,640.00**	$42.00	$17,472.00	$45.00	$18,720.00
BEDDING STONE (15", NO. 57 STONE)	453	$60.00	$27,180.00	$137.06	$62,088.18	$193.00	$87,429.00	**$115.00**	**$52,095.00**	$110.00	$49,830.00	$170.00	$77,010.00
PERFORMANCE TURF, SOD	6436	$12.00	$77,232.00	$9.78	$62,944.08	$1.00	$6,436.00	**$1.00**	**$6,436.00**	$2.00	$12,872.00	$5.00	$32,180.00
SINGLE POST SIGN, F&I, GM, 12-20 SF	10	$350.00	$3,500.00	$1,150.00	$11,500.00	$875.00	$8,750.00	**$500.00**	**$5,000.00**	$1,050.00	$10,500.00	$1,000.00	$10,000.00
PAINTED PAVEMENT MARKINGS, FINAL SURFACE	1	$25,000.00	$25,000.00	$2,500.00	$2,500.00	$3,115.00	$3,115.00	**$3,000.00**	**$3,000.00**	$3,300.00	$3,300.00	$5,000.00	$5,000.00
THERMOPLASTIC, STD, WHITE, SOLID, 12"	48	$5.00	$240.00	$5.00	$240.00	$10.00	$480.00	**$10.00**	**$480.00**	$11.00	$528.00	$10.00	$480.00
THERMOPLASTIC, STD, WHITE, SOLID, 24"	104	$10.00	$1,040.00	$10.00	$1,040.00	$14.00	$1,456.00	**$13.00**	**$1,352.00**	$15.00	$1,560.00	$22.00	$2,288.00
THERMOPLASTIC, STD, WHITE, MESSAGE	2	$300.00	$600.00	$500.00	$1,000.00	$565.00	$1,130.00	**$550.00**	**$1,100.00**	$660.00	$1,320.00	$1,000.00	$2,000.00
THERMOPLASTIC, STD, OPEN GRADED, WHITE, SOLID, 6"	0.0352	$50,000.00	$1,760.00	$20,000.00	$704.00	$11,931.82	$420.00	**$10,000.00**	**$352.00**	$11,880.00	$418.18	$30,000.00	$1,056.00
THERMOPLASTIC, STD, OPEN GRADED, YELLOW, SOLID, 6"	0.0112	$50,000.000	$560.00	$20,000.00	$224.00	$12,053.57	$135.00	**$10,000.00**	**$112.00**	$11,880.00	$133.06	$30,000.00	$336.00
REMOVE EXISTING 2" PIPE	330	$20.00	$6,600.00	$32.62	$10,764.60	$29.00	$9,570.00	**$15.00**	**$4,950.00**	$27.00	$8,910.00	$30.00	$9,900.00
REMOVE EXISTING 3" PIPE	105	$20.00	$2,100.00	$76.65	$8,048.25	$39.00	$4,095.00	**$15.00**	**$1,575.00**	$27.00	$2,835.00	$35.00	$3,675.00
REMOVE EXISTING 6" PIPE	1,125	$50.00	$56,250.00	$29.00	$32,625.00	$47.00	$52,875.00	**$15.00**	**$16,875.00**	$40.00	$45,000.00	$35.00	$39,375.00
2" PE WATER MAIN	30	$40.00	$1,200.00	$71.62	$2,148.60	$190.00	$5,700.00	**$50.00**	**$1,500.00**	$60.00	$1,800.00	$75.00	$2,250.00
4" DI WATER MAIN	295	$80.00	$23,600.00	$121.75	$35,916.25	$199.00	$58,705.00	**$85.00**	**$25,075.00**	$120.00	$35,400.00	$140.00	$41,300.00
6" DI WATER MAIN	580	$140.00	$81,200.00	$108.44	$62,895.20	$213.00	$123,540.00	**$90.00**	**$52,200.00**	$130.00	$75,400.00	$145.00	$84,100.00
8" DI WATER MAIN	382	$120.00	$45,840.00	$123.67	$47,241.94	$235.00	$89,770.00	**$115.00**	**$43,930.00**	$140.00	$53,480.00	$155.00	$59,210.00
GATE VALVE WITH BOX (6")	5	$8,000.00	$40,000.00	$3,125.90	$15,629.50	$3,775.00	$18,875.00	**$2,500.00**	**$12,500.00**	$3,665.00	$18,325.00	$3,000.00	$15,000.00
GATE VALVE WITH BOX (8")	3	$9,000.00	$27,000.00	$4,882.79	$14,648.37	$4,451.00	$13,353.00	**$3,400.00**	**$10,200.00**	$4,455.00	$13,365.00	$4,500.00	$13,500.00
TAPPING SLEEVE AND VALVE ASSEMBLY (2")	1	$1,500.00	$1,500.00	$2,509.23	$2,509.23	$3,750.00	$3,750.00	**$5,000.00**	**$5,000.00**	$2,365.00	$2,365.00	$5,000.00	$5,000.00
TAPPING SLEEVE AND VALVE ASSEMBLY (6")	2	$15,000.00	$30,000.00	$8,789.48	$17,578.96	$9,450.00	$18,900.00	**$10,000.00**	**$20,000.00**	$8,268.00	$16,536.00	$9,000.00	$18,000.00
CUT-IN CONNECTION TO EXISTING WATER MAIN	8	$5,000.00	$40,000.00	$4,441.69	$35,533.52	$3,625.00	$29,000.00	**$5,000.00**	**$40,000.00**	$9,831.00	$78,648.00	$5,000.00	$40,000.00
LINE STOP ASSEMBLY (6")	2	$7,000.00	$14,000.00	$11,764.42	$23,528.84	$9,975.00	$19,950.00	**$10,000.00**	**$20,000.00**	$14,380.00	$28,760.00	$15,000.00	$30,000.00
2" BLOW OFF ASSEMBLY	1	$5,000.00	$5,000.00	$4,111.97	$4,111.97	$4,390.00	$4,390.00	**$1,500.00**	**$1,500.00**	$5,278.00	$5,278.00	$4,000.00	$4,000.00
OFFSET AIR RELEASE VALVE ASSEMBLY (2" DIAMETER)	2	$3,500.00	$7,000.00	$9,912.62	$19,825.24	$9,275.00	$18,550.00	**$10,000.00**	**$20,000.00**	$7,270.00	$14,540.00	$7,500.00	$15,000.00
REMOVE AND SALVAGE FIRE HYDRANT	3	$6,500.00	$19,500.00	$8,368.06	$25,104.18	$13,780.00	$41,340.00	**$12,000.00**	**$36,000.00**	$10,555.00	$31,665.00	$10,500.00	$31,500.00
CLOSE, PLUG, AND ABANDON EXISTING 3" GATE VALVE	1	$3,000.00	$3,000.00	$3,515.57	$3,515.57	$2,950.00	$2,950.00	**$1,500.00**	**$1,500.00**	$2,275.00	$2,275.00	$3,000.00	$3,000.00
1" WATER SERVICE CONNECTION	12	$20.00	$240.00	$2,300.22	$27,602.64	$4,385.00	$52,620.00	**$1,400.00**	**$16,800.00**	$2,015.00	$24,180.00	$1,500.00	$18,000.00
8" PVC SAN SEWER (0-6 FT. DEEP)	308	$135.00	$41,580.00	$84.20	$25,933.60	$225.00	$69,300.00	**$75.00**	**$23,100.00**	$145.00	$44,660.00	$100.00	$30,800.00
4' DIA. SAN SEWER MANHOLE (0-6 FT. DEEP)	1	$11,000.00	$11,000.00	$7,510.03	$7,510.03	$12,975.00	$12,975.00	**$6,000.00**	**$6,000.00**	$13,300.00	$13,300.00	$10,500.00	$10,500.00
SINGLE LATERAL SERVICE (0-8 FT DEEP)	9	$500.00	$4,500.00	$4,691.37	$42,222.33	$4,980.00	$44,820.00	**$2,000.00**	**$18,000.00**	$3,378.00	$30,402.00	$4,500.00	$40,500.00
DECORATIVE WALL, F&I, COMPLETE	2	$25,000.00	$50,000.00	$68,800.00	$137,600.00	$43,550.00	$87,100.00	**$15,000.00**	**$30,000.00**	$31,072.00	$62,144.00	$75,000.00	$150,000.00

BID TABULATION
12/05/2023 2:00 P.M.
ITB #24-002 W. Oakland Ave Reconstruction

DECORATIVE COLUMN, F&I, COMPLETE	4	$5,000.00	$20,000.00	$20,750.00	$83,000.00	$14,575.00	$58,300.00	**$5,000.00**	**$20,000.00**	$21,630.00	$86,520.00	$27,620.00	$110,480.00
DECORATIVE BENCHES, F&I, COMPLETE	8	$6,000.00	$48,000.00	$2,334.29	$18,674.32	$4,650.00	$37,200.00	**$3,000.00**	**$24,000.00**	$4,300.00	$34,400.00	$2,470.00	$19,760.00
CONCRETE RIBBON CURB	313	$80.00	$25,040.00	$51.27	$16,047.51	$33.00	$10,329.00	**$50.00**	**$15,650.00**	$66.00	$20,658.00	$50.00	$15,650.00
LANDSCAPE IRRIGATION SYSTEM, F&I, COMPLETE	1	$40,000.00	$40,000.00	$74,627.00	$74,627.00	$87,500.00	$87,500.00	**$71,000.00**	**$71,000.00**	$59,400.00	$59,400.00	$75,000.00	$75,000.00
MULCH	92	$45.00	$4,140.00	$98.00	$9,016.00	$69.00	$6,348.00	**$110.00**	**$10,120.00**	$14.00	$1,288.00	$60.00	$5,520.00
TREE ROOT BARRIER	2,192	$45.00	$98,640.00	$26.00	$56,992.00	$4.00	$8,768.00	**$8.00**	**$17,536.00**	$7.00	$15,344.00	$8.00	$17,536.00
CRAPE MYRTLE	23	$200.00	$4,600.00	$1,550.00	$35,650.00	$940.00	$21,620.00	**$820.00**	**$18,860.00**	$330.00	$7,590.00	$700.00	$16,100.00
HIGHRISE LIVE OAK	11	$500.00	$5,500.00	$2,100.00	$23,100.00	$2,750.00	$30,250.00	**$2,100.00**	**$23,100.00**	$330.00	$3,630.00	$2,000.00	$22,000.00
CABBAGE PALM	22	$200.00	$4,400.00	$1,400.00	$30,800.00	$815.00	$17,930.00	**$525.00**	**$11,550.00**	$330.00	$7,260.00	$600.00	$13,200.00
FIREFLY FIREBUSH	232	$100.00	$23,200.00	$55.00	$12,760.00	$27.00	$6,264.00	**$37.00**	**$8,584.00**	$27.00	$6,264.00	$20.00	$4,640.00
MRS SCHILLERS VIBURNUM	98	$100.00	$9,800.00	$86.00	$8,428.00	$37.00	$3,626.00	**$37.00**	**$3,626.00**	$27.00	$2,646.00	$30.00	$2,940.00
BABY PETE AGAPANTHUS	1,749	$35.00	$61,215.00	$30.00	$52,470.00	$19.00	$33,231.00	**$16.00**	**$27,984.00**	$27.00	$47,223.00	$15.00	$26,235.00
MUHLY GRASS	327	$20.00	$6,540.00	$25.00	$8,175.00	$15.00	$4,905.00	**$17.00**	**$5,559.00**	$27.00	$8,829.00	$15.00	$4,905.00
POWDERPUFF MIMOSA	1,802	$20.00	$36,040.00	$16.00	$28,832.00	$11.00	$19,822.00	**$9.00**	**$16,218.00**	$27.00	$48,654.00	$15.00	$27,030.00
PEACH DRIFT ROSE	180	$100.00	$18,000.00	$50.00	$9,000.00	$27.00	$4,860.00	**$25.00**	**$4,500.00**	$27.00	$4,860.00	$25.00	$4,500.00
6" PVC SCHEDULE 40 CONDUIT F&I	1500	$110.00	$165,000.00	$53.09	$79,635.00	$90.00	$135,000.00	**$55.00**	**$82,500.00**	$75.00	$112,500.00	$33.00	$49,500.00
			$3,557,177.00		$4,636,277.69		$4,203,529.00		**$3,033,893.00**		$4,285,745.23		$3,907,620.00
			2		**6**		**4**		**1**		**5**		**3**

*Bidders listed in alphabetical order
*Yellow highlighted amounts represent discrepancies on the bid form
*Missing forms considered a minor irregularity

SECTION 00300

BID FORM

SUBMITTED: DEC. 5, 2023
(Date)

PROJECT IDENTIFICATION: CITY OF OCOEE BID

ITB #24-002 W. Oakland Ave Reconstruction

NAME OF BIDDER: J Malever Construction Company

BUSINESS ADDRESS: 301 Sampey Rd. PHONE NO.: 352-429-9507
CITY, STATE, ZIP: Groveland, FL 34736

CONTRACTOR'S FEDERAL I.D. NUMBER 59-3551606

CONTRACTOR'S FLORIDA LICENSE NO.: CUC1225535

THIS BID IS SUBMITTED TO: City of Ocoee, Florida (hereinafter called Owner)

1. The undersigned Bidder proposes and agrees, if this Bid is accepted, to enter into an Agreement with Owner in the form included in the Contract Documents to perform and furnish all Work, as specified or indicated in the Contract Documents for the Contract Price and within the Contract Time indicated in this Bid Form and in accordance with the other terms and conditions of the Contract Documents.

2. Bidder accepts all of the terms and conditions of the Bidding Documents, including, without limitation, those dealing with the disposition of Bid Bond. This Bid will remain open for ninety (90) calendar days after the day of Bid opening. Bidder will sign and deliver the required number of counterparts of the Amendment to the Agreement with the Bonds and other documents required by the Bidding Requirements within ten (10) days after the date of Owner's Notice of Intent to Award.

3. In submitting this Bid, Bidder makes all representations required by the Instructions to Bidders and the Agreement and further warrants and represents that:

   a. Bidder has examined copies of all the Bidding Documents and of the following Addenda:

No. #1	Dated 11/9/23	No.		Dated:	
No. #2	Dated 11/29/23	No.		Dated:	
No. #3	Dated 11/30/23	No.		Dated:	
No.	Dated	No.		Dated:	

(Receipt of all which is hereby acknowledged) and also copies of the Invitation for Bids and the Instructions to Bidders.

b. Bidder has familiarized itself with the nature and extent of the Contract Documents, work, site, locality, and all local conditions and laws and regulations that in any manner may affect cost, progress, performance or furnishing the Work.

c. Bidder has carefully studied all reports of explorations and tests of subsurface conditions at or contiguous to the site and all drawings of physical conditions in or relating to existing surface of subsurface structures at or contiguous to the site (except Underground Facilities) which have been identified in the Supplementary Conditions, as provided in paragraph 4.02.1 of the General Conditions. Bidder accepts the determination set forth in paragraph SC-4.02 of the Supplementary Conditions of the extent of the "technical data" contained in such reports and drawings upon which Bidder is entitled to rely, as provided in paragraph 4.02 of the General Conditions. Bidder acknowledges that such reports and drawings are not Contract Documents and may not be complete for Bidder's purposes. Bidder acknowledges that Owner and Engineer do not assume responsibility for the accuracy or completeness of information and data shown or indicated in the Bidding Documents with respect to Underground Facilities at or contiguous to the site.

d. Bidder has obtained and carefully studied (or assumes responsibility for having done so) all such additional or supplementary examinations, investigations, explorations, tests, studies and data concerning conditions (surface, subsurface and Underground Facilities) at or contiguous to the site or otherwise which may affect cost progress, performance or furnishing of the Work, or which relate to any aspect of the means, methods, techniques, sequences and procedures of construction to be employed by Bidder and safety precautions and programs incident thereto. Bidder does not consider that any additional examinations, investigations, explorations, tests, studies or data are necessary for the determination of this Bid for performance and furnishing of the Work in accordance with the times, price and other terms and conditions of the Contract Documents.

e. Bidder understands the full extent and scope of Work to be performed by Owner and others at the site that relates to Work for which this Bid is submitted.

f. Bidder has correlated the information known to Bidder, information and observations obtained from visits to the site, reports and drawings identified in the Contract Documents and all additional examinations, investigations, explorations, tests, studies and date with the Contract Documents.

g. Bidder has given Engineer written notice of all conflicts, errors, ambiguities or discrepancies that Bidder has discovered in the Contract Documents and the written resolution thereof by Engineer is acceptable to Bidder, and the Contract

Documents are generally sufficient to indicate and convey understanding of all terms and conditions for performing and furnishing the Work for which this Bid is submitted.

h. This Bid is genuine and not made in the interest of or on behalf of any undisclosed person, firm or corporation and is not submitted in conformity with any agreement or rules of any group, association, organization or corporation; Bidder has not directly or indirectly induced or solicited any other Bidder to submit a farce or sham Bid; Bidder has not solicited or induced any person, firm or corporation to refrain from bidding; and Bidder has not sought by collusion to obtain for itself any advantage over any other Bidder or over Owner.

i. Bidder hereby agrees to commence Work under this contract on or before a date to be specified in the Notice to Proceed and to fully complete all work of the project within the Contract Time specified in the Scope of Work Agreement (Section 00500). Bidder further accepts the provisions of the Scope of Work Agreement as to liquidated damages and agrees to pay as liquidated damages the amount stated in the Scope of Work Agreement (Section 00500), for each consecutive calendar day completion of the Work is delayed.

Completion Schedule:

1) The Work shall be substantially complete within the Contract Time specified in Article 3.1 of the Proposed Scope of Work Agreement (Section 00500).

2) The Work shall be finally complete within the contract Time specified in Article 3.2 of the Proposed Scope of Work Agreement (Section 00500).

4. All bid items shall include all materials, equipment, labor, permit fees, taxes, tests, miscellaneous costs of all types, overhead, and profit for the item to be complete, in place, and ready for operation in the manner contemplated by the Contract Documents. Bidder submits the **TOTAL BID OR TOTAL BASE BID** to perform all the Work, as required by the Drawings and Specifications.

5. The following documents are made a condition of this Bid:

a. **Bidding Documents and shall include the following:**

1. Bid Forms (entire Section 00300, 00301, 00301A, 00302, 00303 and 00310)
2. Bid Bond (Surety Bond or Cashier's Check). (Section 00410)
3. Non-collusion Affidavit (Section 00480)
4. Conflict of Interest Disclosure (Section 00480a)
5. Certification of Non-segregated Facilities (Section 00481)
6. Sworn Statement on Public Entity Crimes (Section 00482)
7. Certification of Nondiscriminatory Labor Practices (Section 00483)
8. Certification Regarding Scrutinized Companies' List (Section 00484)

ITB #24-002 Bid Form (Page 1 of 3)					
Item No.	Item Description	Quantity	Unit	Unit Price	Total Price
	GENERAL				
1.01	MOBILIZATION	1	LS	150,000.00	150,000.00
1.02	MAINTENANCE OF TRAFFIC	1	LS	96,000.00	96,000.00
1.03	SEDIMENT BARRIER	1,678	LF	6.00	10,068.00
1.04	INLET PROTECTION SYSTEM	5	EA	750.00	3,750.00
1.05	CLEARING & GRUBBING	1.87	AC	220,000.00	411,400.00
1.06	REMOVAL OF EXISTING CONCRETE	978	SY	40.00	39,120.00
1.07	MAILBOX, RELOCATE	14	EA	400.00	5,600.00
1.08	WEIGH SCALE REMOVAL & RESTORATION	1	LS	30,000.00	30,000.00
1.09	REGULAR EXCAVATION	2,179	CY	15.00	32,685.00
1.10	EMBANKMENT	195	CY	15.00	2,925.00
1.11	TYPE B STABILIZATION (LBR40) (12")	4,050	SY	10.00	40,500.00
1.12	OPTIONAL BASE GROUP 09 CRUSHED CONC. (10")	3,205	SY	35.00	112,175.00
1.13	MILLING EXISTING ASPHALT PAVEMENT, 1" AVG DEPTH	207	SY	55.00	11,385.00
1.14	SUPERPAVE ASHPALT CONC. TRAFFIC C, 1"	11	TN	275.00	3,025.00
1.15	SUPERPAVE ASHPALT CONC. TRAFFIC C, 2"	291	TN	275.00	80,025.00
1.16	INLETS, CURB, TYPE 9, P BOT <10'	8	EA	5,000.00	40,000.00
1.17	INLETS, CURB, TYPE 9, J BOT, <10'	1	EA	45,000.00	45,000.00
1.18	INLETS, CURB, TYPE 9, PARTIAL	1	EA	5,200.00	5,200.00
1.19	INLETS, VALLEY GUTTER, P BOTTOM <10'	6	EA	7,400.00	44,400.00
1.20	INLETS, VALLEY GUTTER, PARTIAL	2	EA	6,400.00	12,800.00
1.21	MANHOLES, J-8, <10'	3	EA	15,400.00	46,200.00
1.22	MANHOLE, ADJUST	3	EA	750.00	2,250.00
1.23	PIPE CULVERT, RCP, ROUND, 24" S/CD	1,133	LF	135.00	152,955.00
1.24	PIPE CULVERT, RCP, ROUND, 30" S/CD	204	LF	160.00	32,640.00
1.25	PIPE CULVERT, RCP, OTHER SHAPE - ELIP/ARCH, 34"X53" S/CD	78	LF	425.00	33,150.00
1.26	CURB AND GUTTER, TYPE F	1,069	LF	45.00	48,105.00
1.27	CURB AND GUTTER, TYPE F, DROP CURB	681	LF	42.00	28,602.00
1.28	CONCRETE CURB, TYPE B	1,798	LF	52.00	93,496.00
1.29	CONCRETE CURB, TYPE D	711	LF	48.00	34,128.00
1.30	CONCRETE, SIDEWALK, CURB RAMP, 4" THICK	1,858	SY	105.00	195,090.00
1.31	CONCRETE, DRIVEWAYS, TRAIL, SEATING PADS, 6" THICK	1,500	SY	150.00	225,000.00
1.32	PAVERS, ARCHITECTURAL, ROADWAY W/ IN-SITU INFILROMETER (6)	701	SY	160.00	112,160.00
1.33	DETECTABLE WARNINGS	416	SF	40.00	16,640.00
1.34	BEDDING STONE (15", NO. 57 STONE)	453	TN	115.00	52,095.00

ITB #24-002 Bid Form (Page 2 of 3)					
Item No.	Item Description	Quantity	Unit	Unit Price	Total Price
1.35	PERFORMANCE TURF, SOD	6,436	SF	1.00	6,436.00
1.36	SINGLE POST SIGN, F&I, GM, 12-20 SF	10	AS	500.00	5,000.00
1.37	PAINTED PAVEMENT MARKINGS, FINAL SURFACE	1	LS	3,000.00	3,000.00
1.38	THERMOPLASTIC, STD, WHITE, SOLID, 12"	48	LF	10.00	480.00
1.39	THERMOPLASTIC, STD, WHITE, SOLID, 24"	104	LF	13.00	1,352.00
1.40	THERMOPLASTIC, STD, WHITE, MESSAGE	2	EA	550.00	1,100.00
1.41	THERMOPLASTIC, STD, OPEN GRADED, WHITE, SOLID, 6"	0.0352	GM	10,000.00	352.00
1.42	THERMOPLASTIC, STD, OPEN GRADED, YELLOW, SOLID, 6"	0.0112	GM	10,000.00	112.00
	UTILITIES				
2.01	REMOVE EXISTING 2" PIPE	330	LF	15.00	4,950.00
2.02	REMOVE EXISTING 3" PIPE	105	LF	15.00	1,575.00
2.03	REMOVE EXISTING 6" PIPE	1,125	LF	15.00	16,875.00
2.04	2" PE WATER MAIN	30	LF	50.00	1,500.00
2.05	4" DI WATER MAIN	295	LF	85.00	25,075.00
2.06	6" DI WATER MAIN	580	LF	90.00	52,200.00
2.07	8" DI WATER MAIN	382	LF	115.00	43,930.00
2.08	GATE VALVE WITH BOX (6")	5	EA	2,500.00	12,500.00
2.09	GATE VALVE WITH BOX (8")	3	EA	3,400.00	10,200.00
2.10	TAPPING SLEEVE AND VALVE ASSEMBLY (2")	1	EA	5,000.00	5,000.00
2.11	TAPPING SLEEVE AND VALVE ASSEMBLY (6")	2	EA	10,000.00	20,000.00
2.12	CUT-IN CONNECTION TO EXISTING WATER MAIN	8	EA	5,000.00	40,000.00
2.13	LINE STOP ASSEMBLY (6")	2	EA	10,000.00	20,000.00
2.14	2" BLOW OFF ASSEMBLY	1	EA	1,500.00	1,500.00
2.15	OFFSET AIR RELEASE VALVE ASSEMBLY (2" DIAMETER)	2	EA	10,000.00	20,000.00
2.16	REMOVE AND SALVAGE FIRE HYDRANT	3	EA	12,000.00	36,000.00
2.17	CLOSE, PLUG, AND ABANDON EXISTING 3" GATE VALVE	1	EA	1,500.00	1,500.00
2.18	1" WATER SERVICE CONNECTION	12	EA	1,400.00	16,800.00
2.19	8" PVC SAN SEWER (0-6 FT. DEEP)	308	LF	75.00	23,100.00
2.20	4' DIA. SAN SEWER MANHOLE (0-6 FT. DEEP)	1	EA	6,000.00	6,000.00
2.21	SINGLE LATERAL SERVICE (0-8 FT DEEP)	9	EA	2,000.00	18,000.00
	LANDSCAPE & HARDSCAPE				
3.01	DECORATIVE WALL, F&I, COMPLETE	2	EA	15,000.00	30,000.00
3.02	DECORATIVE COLUMN, F&I, COMPLETE	4	EA	5,000.00	20,000.00
3.03	DECORATIVE BENCHES, F&I, COMPLETE	8	EA	3,000.00	24,000.00
3.04	CONCRETE RIBBON CURB	313	LF	50.00	15,650.00
3.05	LANDSCAPE IRRIGATION SYSTEM, F&I, COMPLETE	1	EA	71,000.00	71,000.00

ITB #24-002 Bid Form (Page 2 of 3)					
Item No.	Item Description	Quantity	Unit	Unit Price	Total Price
3.06	MULCH	92	CY	110.00	10,120.00
3.07	TREE ROOT BARRIER	2,192	LF	8.00	17,536.00
3.08	CRAPE MYRTLE	23	EA	820.00	18,860.00
3.09	HIGHRISE LIVE OAK	11	EA	2,100.00	23,100.00
3.10	CABBAGE PALM	22	EA	525.00	11,550.00
3.11	FIREFLY FIREBUSH	232	EA	37.00	8,584.00
3.12	MRS SCHILLERS VIBURNUM	98	EA	37.00	3,626.00
3.13	BABY PETE AGAPANTHUS	1,749	EA	16.00	27,984.00
3.14	MUHLY GRASS	327	EA	17.00	5,559.00
3.15	POWDERPUFF MIMOSA	1,802	EA	9.00	16,218.00
3.16	PEACH DRIFT ROSE	180	EA	25.00	4,500.00
	DUKE ENERGY ITEM				
4.01	6" PVC SCHEDULE 40 CONDUIT F&I	1,500	LF	55.00	82,500.00
Total Base Bid Cost:					3,033,893.00
Written Total Base Bid Cost:	Three million, thirty three thousand, eight hundred ninety three dollars and 00/100 cents				

LEGEND: AC = Acre; AS = Assembly; CY = Cubic Yard; GM = Gross Mile; EA = Each; LF = Linear Foot; LS = Lump Sum; SY = Square Yard; TN = U.S. Ton

Company Name: J. Malever Construction Company

By: Scott Tyre Scott Tyre

Notes:

1. Pay items obtained from the Florida Department of Transportation (FDOT) Basis of Estimates (BOE) dated 2014.
2. Reference Specification Section 01025 Measurement and Payment for a detailed list of Bid Items.
3. All areas disturbed by construction are to be restored to match existing to equal or better condition.
4. The Contractor is to verify all quantities prior to BID.

7. The Bidder acknowledges that the City specifically reserves the right to accept and make an award to a Bidder that has not submitted the lowest Bid when, in Owner's sole and absolute discretion, it determines that action to be in its best interest. The terms used in this Invitation to Bid, which are defined in the General Conditions and included as part of the Contract Documents, have the meanings assigned to them in the General Conditions.

8. The work shall be performed under a Florida Underground Utility or General Contractor license. Contract shall not be awarded unless proof of valid license(s) is provided.

9. It is understood that where quantities for unit price work have been presented on the Bid Form, they are approximate only and are solely for the purpose of facilitating the comparison of bids, and that the Contractor's compensation will be computed upon the basis, described in the measurement and payment clauses in the specifications contained herein.

10. **BASE BID - SCHEDULE OF MANUFACTURERS/SUPPLIERS**

If the foregoing Schedule of Bid Items is presented in a Base Bid format, the undersigned as Bidder, agrees that the Contract, if awarded, will be on the basis of the materials and equipment named in the Contract Documents, in accordance with Article 10 of the Instructions to Bidders (Section 00100). The undersigned, as Bidder, also agrees that the Total Bid reflects the equipment and material supplied by one of the listed manufacturers/suppliers, by circling "A", "B", "C", etc. If the Bidder desires to propose an alternate manufacturer/supplier, he may write in the name of such alternate in the substitution list included within this Bid Form, but he must, nevertheless, also circle one of the listed manufacturers/suppliers. If the proposed alternate manufacturer/supplier is determined "not equivalent" by the Engineer, the Bidder must furnish equipment and/or material items by the circled manufacturer/supplier. If the Bidder fails to indicate which listed manufacturer/supplier he intends to use if an alternate is rejected, he must use the manufacturer/supplier listed as "A," or such other listed manufacturer as the City may approve. Also, if the Bidder circled more than one listed manufacturer/supplier, he must use the first manufacturer/supplier circled (unless an alternate is approved).

11. **SUBSTITUTIONS AND "OR EQUAL"**

The undersigned as Bidder agrees that substitutions, or "equal," items will not be considered until after the effective date of the Agreement and will be evaluated in accordance with paragraphs 6.05.1 and 6.05.2 of the General Conditions. In addition to the reimbursement required under the General Conditions, the Contractor shall also reimburse the Owner for any engineering costs directly attributable to the change in manufacturers/suppliers caused by the acceptance of proposed alternates, such as, additional field trips for the Engineer, additional redesign costs, additional review costs, etc. Other costs directly attributable to the change in manufacturers/suppliers caused by the acceptance of proposed alternates, such as; increased electrical requirements, larger building, additional pumps or tankage, etc., shall be borne by others and not the Owner.

If Bidder intends to propose substitutions or "equal" items after the effective date of the Agreement, it is agreed that these items must be listed on the Substitution List included within this Bid Form, with a deductive amount representing 50 percent of the total savings between the named Base Bid item and the proposed item. "Base Bid" item substitutions providing to the Owner equipment or material cost savings of less than $1,000 will not be considered. The undersigned, as Bidder, also agrees that if a substitution or "equal" item is not listed on the Substitution List included with the Bid, all of the savings between the named item and the proposed item will go to the Owner, if the Owner accepts the proposed item in accordance with paragraphs 6.05.1 and 6.05.2 of the General Conditions. The Owner may request, and the undersigned Bidder shall supply, complete information on proposed substitutions. Such information shall be the manufacturer's current published or preprinted information for the specific substitution.

12. As Bidder, I hereby certify that I am aware and understand that the City of Ocoee in its sole discretion reserves the right to waive technicalities or irregularities, to reject any or all Bids, and/or to accept that Bid which is in the best interest of the City. The award of this Bid, if made, may be based on considerations other than total cost, and may be awarded based on various considerations, including but not limited to: Bidder experience and whether the Bid, in the judgment of the City, is the most responsive to the City's needs.

SUBSTITUTION LIST

Bidder offers the following substitutions and "equal" items.

Equipment Item or Material	Spec Section	Alternative Manufacturer/Supplier (List One Only)	Deductible Amount* (Indicate Whether Lump Sum or Unit Price)
N/A			

Represents 50 percent of the difference in cost in accordance with the General Conditions
(Minimum Deductible Amount per Substitution Item shall be $1,000)
(Bidder may make additional copies of this page as required.)

Strike out (X) non-applicable signature block and complete applicable block. (ALL SIGNATORIES MUST HAVE THEIR NAMES PRINTED OR TYPED BELOW THEIR SIGNATURES)
If Bidder is:

SOLE PROPRIETORSHIP

(SEAL)

(Individual's Signature)

(Individual's Name)

doing business as

n/a

Business Address:

Phone No.:

Florida License No.: _____

A PARTNERSHIP

(SEAL)

(Partnership Name)

(General Partner's Signature)

(General Partner's Name)

Business address:

n/a

Phone No.:
Florida License No.: _____

Strike out (X) non-applicable signature block and complete applicable block. (ALL SIGNATORIES MUST HAVE THEIR NAMES PRINTED OR TYPED BELOW THEIR SIGNATURES)

If Bidder is:

A CORPORATION

J. Malever Construction Company

(Corporation Name)

Florida

(State of Incorporation)

By Scott Tyre

(Name of person authorized to sign)

Vice President

(Title)

Scott Tyre

(Authorized Signature)

(Corporate Seal)

Attest

(Secretary)

Business address: 301 Sampey Rd.
Groveland, FL 34736

Phone No.: (352)429-9507

Corporation President: Cary J. Malever

Florida License No.: CUC1225535

Strike out (X) non-applicable signature block and complete applicable block. (ALL SIGNATORIES MUST HAVE THEIR NAMES PRINTED OR TYPED BELOW THEIR SIGNATURES)

If Bidder is:

A JOINT VENTURE

By

(Name)

(Address)

By

(Name) n/a

(Address)

Business Address:

Phone No.:

Florida License No.:

(Each joint venturer must sign. The manner of signing for each individual, partnership, and corporation that is a party to the joint venture should be in the manner indicated above.)

Florida License No.:

13. List the following in connection with the Surety which is providing the Bid Bond:

Surety's Name: Nationwide Mutual Insurance Company

Surety's Address: One West Nationwide Blvd. 1-04-701, Columbus, OH 43215

14. Name and address of Surety's resident agent for service of process in Florida:

M.E. Wilson Company, LLC dba Waldorff Insurance & Bonding

1110 NW 6th Street

Gainesville, FL 32601

CORPORATE AUTHORITY TO EXECUTE DOCUMENTS

I HEREBY CERTIFY that a meeting of the Board of Directors of _____
J. Malever construction company, a corporation under
(Contractor's Corporate Name)
the laws of the State of Florida, held on the 28th day of NOV., 2023
the following resolution was duly passed and adopted:

"RESOLVED, that Scott Tyre Scott Tyre
(signature of individual) (typed name of individual)
as Vice President of the corporation, is hereby authorized to execute and all documents required to be signed by an officer of the Corporation in order to submit a valid bid, contract and bond for

CITY OF OCOEE
ITB #24-002 W. Oakland Ave Reconstruction

between the CITY OF OCOEE, a municipal corporation, and this corporation, and that his execution thereof, attested by the Secretary of the corporation and with corporate seal affixed shall be the official act and deed of this corporation."

I FURTHER CERTIFY that said resolution is now in full force and effect.

IN WITNESS WHEREOF, I have hereunto set my hand and affixed the official seal of the corporation this 28th day of NOV., 2023
(CORPORATE SEAL)

_____ (Corporate Secretary)

STATE OF Florida
CITY OF Lake

The foregoing instrument was acknowledged before me this 28th day of November, 2023 by Scott Tyre, Vice President (name of officer or agent, title of officer or agent), of J. Malever construction (name of corporation acknowledging), a Florida (state or place of incorporation) corporation, on behalf of the corporation. He/She is personally known to me or has produced identification n/a (type of identification) as identification and did/did not take an oath.

_____
(Notary Public)
My Commission Expires: 9/6/25

CHRISTINA L. LEE
Notary Public
State of Florida
Comm# HH172757
Expires 9/6/2025

END OF SECTION

SECTION 00301
QUESTIONNAIRE

Bidder shall fill out questionnaire form with all information pertinent to his/her company: failure of the Bidder to provide all information required in this form may cause your Bid to be deemed Non-Responsive.

DATE: 11/28/2023

PROJECT IDENTIFICATION: City of Ocoee
ITB #24-002 W. Oakland Ave Reconstruction

NAME OF BIDDER: J. Malever Construction Company

BUSINESS ADDRESS: 301 Sampey Rd. Groveland, FL 34736

TELEPHONE NO.: 352-429-9507 EMAIL Scott@JMalever.com

CONTRACTOR'S FLORIDA LICENSE NO. CUC 1225535

The undersigned warrants the truth and accuracy of all statements and answers herein contained. Include additional sheets if necessary.

1. How many years has your organization been in business licensed Florida Contractor?
25

2. Describe and give the date and owner contat information of the last 3 (three) projects that you have completed in the last 10 (ten) years with surface and sub-surface construction elements included within the proposed project scope?

1) Total road reconstruction – City of Orlando – Annie St – Howard Elkins – 407-246-2289

2) Total site construction / Subdivision – in Clermont – Hartwood Marsh Ph 1+2 – Dream Finders Homes – Christian Torres 407-414-6766

3) Total road reconstruction – City of Orlando – Isis St – Howard Elkins – 407-246-2289

Have you ever failed to complete work awarded to you? If so, where and why?
No

4. Name three (3) municipalities for which you have performed similar work and contact person:

City of Ocoee, Jamie Croteau 407-905-3159 City of Clermont → Paul Erickson 352-394-7177
City of Orlando Howard Ellis - 407-246-2289
City of Groveland TJ Fiel - 352-306-6520

5. Have you personally inspected the site of the proposed Work? Describe any anticipated problems with the site and your proposed solutions?

yes we have looked at the site - the relocation schedule for the 15+/- power poles by Duke Elect will/could impact the construction schedule

6. Will you Subcontract any part of this Work? If so, describe which portions and the percentage of the project:

Yes we will subcontract the following areas
concrete curb/sidewalk/wall - 23%
landscape/irrigation - 7%
pavement markings/signs - 1%
MOT/signs/Barricades - 1%

7. What equipment do you plan on using to complete the Work?

Backhoe, loader, motorgrader, roller, skid steer, asphalt paver, dump truck - all owned by J. Malever

8. State the true and exact, correct, and complete name under which you do business.

Bidder is: J. Malever Construction Company

SECTION 00301-A

SUBCONTRACTOR & SUPPLIER LIST

Will your firm be doing all the Work with your own forces? Yes____ No ✓ (Check yes only if no subcontracting opportunities exist. If you will be doing portions of the Work with your own forces, list these areas and approximate dollar amount allocated for this Work. List suppliers).

List all proposed subcontractors and suppliers to be used to include company names, contractor license number, contact, addresses, phone numbers, type of work subcontracted (trade/commodity), and dollar amount of work. Provide all information requested. Use additional sheets if necessary.

Submit Update Subcontractor/Supplier List with each progress payment requested. Submit Final Subcontractor/Supplier List with Final Payment Request.

COMPANY NAME, CONTACT ADDRESS, PHONE NUMBER	WORK TO BE PERFORMED (TRADE) OR COMMODITY TO BE SUPPLIED	ESTIMATED DOLLAR AMOUNT
1 Flashrite Inc 115 Atlantic Dr Maitland FL 32751 407-834-0408	Mot. Signs + Barricades sub	$30,000
2 Angco striping 1075 North Ronald Reagan Blvd Longwood FL 32750 407-578-8308	Pavement marking sub	$12,000
3 Central Fla Const Walls 4985 Hoffner Ave suite 3 Orlando FL 32812 407-377-7170	curb / sidewalk sub	$560,000
4 MRM Landscape 1315 Stowe Ave Mt Dora FL 32757 407-304-8137	Landscape / Irrigation sub	$180,000
5 Ocl-Zotto Precast 4575 West HW 40 Ocala FL 34482 352-351-3824	Precast str and RCP supplier	$160,000
6 Ferguson Waterworks 801 Thorpe Rd Orlando FL 32824 407-859-7473	Pipe / valves / Fittings supplier	$140,000
7		

END OF SECTION

SECTION 00302

COMPLIANCE WITH FLORIDA TRENCH SAFETY ACT (90-96, LAWS OF FLORIDA)

Bidder hereby acknowledges that all costs for complying with the Florida Trench Safety Act are included in the various items of the bid and in the Lump Sum Total Bid Price shown in Section 00300 - Bid Form, "Schedule of Bid Items". For informational purposes only, the bidder is required to further identify these costs in the summary below.

	Trench Safety Measure (Description)	Unit of Measure (LF, SY)	Unit (Quantity)	Unit Cost	Extended Cost
A	Trench box	LF	2,700	$ 1.00	$ 2,700
B				$	$
C				$	$
D				$	$
				TOTAL	$ 2700.00

BIDDER: J. Malever Const. Co.

SIGNED: Scott Tyre

BY: Scott Tyre
(Print or type name)

TITLE: Vice President

DATE: 11/28/2023

THIS IS NOT A PAY ITEM: The purpose of this form is to gather information on the costs associated with trench safety measures and to insure that the Bidder has considered these costs and included them in the Lump Sum Total Bid price. Contractor will not receive additional payment if actual quantities differ from those estimated or if the Contractor uses a safety measure different than those listed.

(Failure to Complete This Form May Result in the Bid Being Declared Non-Responsive.)

END OF SECTION

SECTION 00303

DRUG-FREE WORKPLACE CERTIFICATION

IDENTICAL TIE BIDS: Preference shall be given to businesses with drug-free workplace programs. Whenever two or more bids which are equal with respect to price, quantity, and service are received by the State or by any political subdivision for the procurement of commodities or contractual services, a bid received from a business that certifies that it has implemented a drug-free workplace program shall be given preference in the award process. Established procedures for processing tie bids will be followed if none of the tied vendors have a drug-free workplace program (Florida Statutes Section 287.037). In order to have a drug-free workplace program, a business shall:

1. Publish a statement notifying employees that the unlawful manufacture, distribution, dispensing, possession, or use of a controlled substance is prohibited in the workplace and specifying the actions that will be taken against employees for violations of such prohibition.

2. Inform employees about the dangers of drug abuse in the workplace, the business's policy of maintaining a drug-free workplace, and available drug counseling, rehabilitation, and employee assistance programs, and the penalties that may be imposed upon employees for drug abuse violations.

3. Give each employee engaged in providing the commodities or contractual services that are under bid a copy of the statement specified in subsection (1).

4. In the statement specified in subsection (1), notify the employees that, as a condition of working on the commodities or contractual services that are under bid, the employee will abide by the terms of the statement and will notify the employer of any conviction of, or pleas of guilty or *nolo contendere* to, any violation of Chapter 893 or of any controlled substance law of the United States or any state, for a violation occurring in the workplace no later than five (5) days after such conviction.

5. Impose a sanction on, or require the satisfactory participation in a drug abuse assistance or rehabilitation program is such is available in the employee's community, by any employee who is so convicted.

6. Make a good faith effort to continue to maintain a drug-free workplace through implementation of this section.

As the person authorized to sign the statement, I certify that this firm complies fully with the above requirements.

Bidder: J. Malever Construction Co.

Signed: Scott Tyre

By: Scott Tyre
(Print or Type Name)

Title: Vice President

Date: 11/28/2023

END OF SECTION

SECTION 00310

CONTRACTOR E-VERIFY AFFIDAVIT

I hereby certify that J. Malever Construction [contractor] does not employ, contract with, or subcontract with an unauthorized alien, and is otherwise in full compliance with Section 448.095, Florida Statutes.

All employees hired on or after January 1, 2021 have had their work authorization status verified through the E-Verify system.

A true and correct copy of J. Malever Construction [contractor] proof of registration in the E-Verify system is attached to this Affidavit.

Scott Tyre

Print Name: Scott Tyre

Date: 11/28/2023

STATE OF Florida

COUNTY OF Lake

The foregoing instrument was acknowledged before me by means of ☒physical presence or ☐online notarization, this 28th of Nov 2023 (date) by Scott Tyre (name of officer or agent, title of officer or agent) of J. Malever Construction (name of contractor company acknowledging), a Florida (state or place of incorporation) corporation, on behalf of the corporation. He/she is personally known to me or has produced n/a (type of identification) as identification.

[Notary Seal]

Notary Public

CHRISTINA L. LEE
Notary Public
State of Florida
Comm# HH172757
Expires 9/6/2025

Christina L. Lee

Name typed, printed or stamped

My Commission Expires: 9/6/25

My Company Account

My Company Profile

Company Information

Company Name
J Malever Construction Company

Doing Business As (DBA) Name

Company ID
935433

Enrollment Date
Jan 06, 2016

Employer Identification Number (EIN)
593551606

Unique Entity Identifier (UEI)

DUNS Number
090719332

Total Number of Employees
20 to 99

NAICS Code
237

Sector
Construction

Subsector
Heavy and Civil Engineering Construction

Edit Company Information

Employer Category

Employer Category
None of these categories apply

Edit Employer Category

Company Addresses

Physical Address
301 Sampey Road
Groveland, FL 34736

Mailing Address
Same as Physical Address

Edit Company Addresses

Hiring Sites

We have implemented a new policy and require more information for existing and future hiring sites.

Number of Sites
1

Edit Hiring Sites

Company Access and MOU

My Company Is Configured to:
Verify Its Own Employees

Memorandum of Understanding
View Current MOU

SECTION 00410
BID BOND

Bidder shall provide the City with a Bid Bond in the amount of five percent (5%) of the contract bid.

KNOW ALL MEN BY THESE PRESENTS, that we, the undersigned, J. Malever Construction Company, Inc. _____, as Principal, and Nationwide Mutual Insurance Company _____ as Surety, are hereby held and firmly bound unto the City of Ocoee, Florida, as Owner, in the penal sum of, (5 percent of the Contract Bid) $_____ Five Percent of the amount bid _____

(written amount in dollars and cents)

for the payment of which, well and truly to be made, we hereby jointly and severally bind ourselves, successors and assigns.

Signed this 5th day of December, 2023 The Condition of the above obligation is such that whereas the Principal has submitted to the City of Ocoee, Florida a certain Bid, attached hereto and hereby made a part hereof to enter into a contract in writing, for the Project: "ITB #24-002 W. Oakland Ave Reconstruction."

NOW THEREFORE

1. Bidder and Surety, jointly and severally, bind themselves, their heirs, executors, administrators, successors and assigns to pay to Owner upon default of Bidder any damages, costs, or expenses, including attorney's fees, incurred by Owner that are proximately caused by such default. In no event shall Bidder's and Surety's obligation hereunder exceed the penal sum set forth on the face of this Bond.

2. Default of Bidder shall occur upon the failure of Bidder to deliver within the time required by the Bidding Documents (or any extension thereof agreed to in writing by Owner) the executed Agreement required by the Bidding Documents and any performance and payment bonds required by the Bidding Documents and Contract Documents.

3. This obligation shall be null and void if:

   3.1 Owner accepts Bidder's bid and Bidder delivers within the time required by the Bidding Documents (or any extension thereof agreed to in writing by Owner) the executed Agreement required by the Bidding Documents and any performance and payment bonds required by the Bidding Documents and Contract Documents, or

   3.2 All bids are rejected by Owner, or

   3.3 Owner fails to issue a Notice of Intent to Award to Bidder within ninety (90) days from the time and date fixed for the opening of Bids (or any extension thereof agreed to in writing by Bidder and, if applicable, consented to by Surety when required by paragraph 5 hereof).

4. Payment under this Bond will be due and payable upon default by Bidder and within 30 calendar days after receipt by Bidder and Surety of written notice of default from Owner, which notice will be given with reasonable promptness, identifying this Bond and the Project and including a statement of the amount due.

5. Surety waives notice of and any and all defenses based on or arising out of any time extension to issue notice of award agreed to in writing by Owner and Bidder, provided that the total time for issuing notice of award including extensions shall not in the aggregate exceed 120 days from Bid Due Date without Surety's written consent.

6. No suit or action shall be commenced under this bond prior to 30 calendar days after the notice of default required in paragraph 4 above is received by Bidder and Surety and in no case later than one year after Bid Due Date.

7. Any suit or action under this Bond shall be commenced only in a court of competent jurisdiction located in the state in which the Project is located.

8. Notices required hereunder shall be in writing and sent to Bidder and Surety at their respective addresses shown on the face of this Bond. Such notices may be sent by personal delivery, commercial courier or by United States Registered or Certified Mail, return receipt requested, postage pre-paid, and shall be deemed to be effective upon receipt by the party concerned.

9. Surety shall cause to be attached to this Bond, a current and effective Power of Attorney evidencing the authority of the officer, agent or representative who executed this Bond on behalf of Surety to execute, seal and deliver such Bond and bind the Surety thereby.

10. This Bond is intended to conform to all applicable statutory requirements. Any applicable requirement of any applicable statute that has been omitted from this Bond shall be deemed to be included herein as if set forth at length. If any provision of this Bond conflicts with any applicable provision of any applicable statute, then the provision of said statute shall govern and the remainder of this Bond that is not in conflict therewith shall continue in full force and effect.

11. The term "bid" as used herein includes a bid, offer, or proposal as applicable.

IN WITNESS WHEREOF, the Principal and the Surety have hereunto set their hands and seals, and such of them as are corporations have caused their corporate seals to be hereto affixed and these presents to be signed by their proper officers, the day and year first set forth above.

BIDDER:	Strike out (X) non-applicable signature blocks and complete applicable block. All signatures must have their names printed or type below their signature.

If Bidder is **SOLE PROPRIETORSHIP**, complete this signature block.	
_____ (Individual's Signature)	(1) _____ (Witness)
_____ (Individual's Signature)	(2) _____ (Witness)
doing business as _____	n/a
	(SEAL)
_____ (Business Address)	
_____ (Telephone No.) _____ (Florida License No.)	

If Bidder is **PARTNERSHIP**, complete this signature block.	
_____ (Partnership Name)	(1) _____ (Witness)
_____ (General Partner's Signature)	(2) _____ (Witness)
_____ (General Partner's Name)	n/a **(SEAL)**
_____ (Business Address)	
_____ (Telephone No.) _____ (Florida License No.)	

If Bidder is **CORPORATION,** complete this signature block.	
J. Malever Construction Co. (Corporation Name)	(1) _____ (Witness)
Florida (State of Incorporation)	(2) _____ (Witness)
By: Scott Tyre (Name of Person Authorized to Sign - See Note 1)	**(SEAL)**
Vice President (Title)	
_____ (Authorized Signature)	
Cary J. Malever (Corporation President)	
301 Sampey Rd. Groveland (Business Address) 34736	
352-429-9507 CUC 1225535 (Telephone No.) (Florida License No.)	

SURETY

Nationwide Mutual Insurance Company (Surety Business Name)	Witness: (If agency is not a Corporation) N/A (1) _____ (Witness)
One West Nationwide Blvd., 1-04-701, Columbus, OH 43215 (Principal Place of Business)	N/A (2) _____ (Witness)
By: Paul A. Locascio (Surety Agent's Signature - See Note 2)	Attest: (If Agency is a Corporation)
Paul A. Locascio (Surety Agent's Name)	R. Sharp (Corporate Secretary Signature) Witness
Attorney-in-Fact & Fla. Resident Agent (Surety Agent's Title)	Rebekah Sharp (Corporate Secretary Name)
M.E. Wilson Company, LLC dba Waldorff Insurance & Bonding (Business Name of Local Agent for Surety)	(Corporate Seal)
1110 NW 6th Street, Gainesville, FL 32601 (Business Address)	
352-374-7779 (Telephone No.) N/A (Bond No.)	

NOTES:

(1) Complete and attach "Corporate Authority to Execute Documents" if executed by any corporate employee other than president or vice-president.

(2) Complete and attach a certified copy of "Power-of-Attorney" prepared by Surety appointing individual "Attorney-in-Fact" for execution of Bid Bond on behalf of Surety and corresponding notarized "Attorney-in-Fact".

(3) Above addresses are to be used for giving required notice.

(4) Any singular reference to Bidder, Surety, Owner or other party shall be considered plural where applicable.

(5) Surety companies executing bonds must appear on the Treasury Department's most current list (Circular 570 as amended) and be authorized to transact business in the state where the project is located.

ATTORNEY-IN-FACT AFFIDAVIT

STATE OR COMMONWEALTH OF Florida)

COUNTY OR CITY OF Gainesville)

Before me, a Notary Public, personally came Paul A. Locascio known to me, and known to be the Attorney-in-Fact of Nationwide Mutual Insurance Company, a Ohio Corporation, which
(Surety Company) (State)

executed the attached bond as surety, who deposed and said that his signature and the corporate seal of said

Nationwide Mutual Insurance Company were affixed by order and authority of said Company's Board of Directors,
(Surety Company)

and that the execution of the attached bond is the free act and deed of Nationwide Mutual Insurance Company.
(Surety Company)

Given under my hand and seal this 5th day of December, 20 23

Rebekah Sharp
(Notary Public)

My Commission Expires 08/15/2027.

END OF SECTION

REBEKAH SHARP
NOTARY PUBLIC
STATE OF FLORIDA
NO. HH 398683
MY COMMISSION EXPIRES AUG. 15, 2027

Power of Attorney

KNOW ALL MEN BY THESE PRESENTS THAT:

Nationwide Mutual Insurance Company, an Ohio corporation

hereinafter referred to severally as the "Company" and collectively as "the Companies" does hereby make, constitute and appoint:

BENJAMIN H FRENCH, K WAYNE WALKER, L DALE WALDORFF, PAMELA L JARMAN,
PAUL A LOCASCIO, REBEKAH F SHARP, TRAVA RIDLON

each in their individual capacity, its true and lawful attorney-in-fact, with full power and authority to sign, seal, and execute on its behalf any and all bonds and undertakings, and other obligatory instruments of similar nature, in penalties not exceeding the sum of

UNLIMITED

and to bind the Company thereby, as fully and to the same extent as if such instruments were signed by the duly authorized officers of the Company; and all acts of said Attorney pursuant to the authority given are hereby ratified and confirmed.

This power of attorney is made and executed pursuant to and by authority of the following resolution duly adopted by the board of directors of the Company:

"RESOLVED, that the president, or any vice president be, and each hereby is, authorized and empowered to appoint attorneys-in-fact of the Company, and to authorize them to execute and deliver on behalf of the Company any and all bonds, forms, applications, memorandums, undertakings, recognizances, transfers, contracts of indemnity, policies, contracts guaranteeing the fidelity of persons holding positions of public or private trust, and other writings obligatory in nature that the business of the Company may require; and to modify or revoke, with or without cause, any such appointment or authority; provided, however, that the authority granted hereby shall in no way limit the authority of other duly authorized agents to sign and countersign any of said documents on behalf of the Company."

"RESOLVED FURTHER, that such attorneys-in-fact shall have full power and authority to execute and deliver any and all such documents and to bind the Company subject to the terms and limitations of the power of attorney issued to them, and to affix the seal of the Company thereto; provided, however, that said seal shall not be necessary for the validity of any such documents."

This power of attorney is signed and sealed under and by the following bylaws duly adopted by the board of directors of the Company.

Execution of Instruments. Any vice president, any assistant secretary or any assistant treasurer shall have the power and authority to sign or attest all approved documents, instruments, contracts, or other papers in connection with the operation of the business of the company in addition to the chairman of the board, the chief executive officer, president, treasurer or secretary; provided, however, the signature of any of them may be printed, engraved, or stamped on any approved document, contract, instrument, or other papers of the Company.

IN WITNESS WHEREOF, the Company has caused this instrument to be sealed and duly attested by the signature of its officer the 27th day of February, 2019.

Antonio C. Albanese, **Vice President** of Nationwide Mutual Insurance Company

ACKNOWLEDGMENT

STATE OF NEW YORK, COUNTY OF NEW YORK: ss
On this 27th day of February, 2019, before me came the above-named officer for the Company aforesaid, to me personally known to be the officer described in and who executed the preceding instrument, and he acknowledged the execution of the same, and being by me duly sworn, deposes and says, that he is the officer of the Company aforesaid, that the seal affixed hereto is the corporate seal of said Company, and the said corporate seal and his signature were duly affixed and subscribed to said instrument by the authority and direction of said Company.

Suzanne C. Delio
Notary Public, State of New York
No. 02DE6126649
Qualified in Westchester County
Commission Expires September 16, 2021

Notary Public
My Commission Expires
September 16, 2021

CERTIFICATE

I, Laura B. Guy, Assistant Secretary of the Company, do hereby certify that the foregoing is a full, true and correct copy of the original power of attorney issued by the Company; that the resolution included therein is a true and correct transcript from the minutes of the meetings of the boards of directors and the same has not been revoked or amended in any manner; that said Antonio C. Albanese was on the date of the execution of the foregoing power of attorney the duly elected officer of the Company, and the corporate seal and his signature as officer were duly affixed and subscribed to the said instrument by the authority of said board of directors; and the foregoing power of attorney is still in full force and effect.

IN WITNESS WHEREOF, I have hereunto subscribed my name as Assistant Secretary, and affixed the corporate seal of said Company this 5 of December 2023

Assistant Secretary

BDJ 1(02-19)00

SECTION 00480

NON-COLLUSION AFFIDAVIT

STATE OF Florida)

COUNTY OF Lake)

Scott Tyre, being first duly swore deposes and says:

1. He (it) is the Vice President (Owner, Partner, Office, Representative or Agent) of J. Malever Construction Company, the Bidder that has submitted the attached Bid;

2. He is fully informed respecting the preparation and contents of the attached Bid and of all pertinent circumstances respecting such Bid;

3. Such Bid is genuine and is not a collusive or sham Bid;

4. Neither the said Bidder nor any of its officers, partners, owners, agents, representatives, employees, or parties in interest, including this affidavit, have in any way, colluded, conspired, connived or agreed, directly or indirectly, with any other Bidder, firm or person to submit a collusive or sham Bid in connection with the Contract for which the attached Bid has been submitted; or to refrains from bidding in connection with such Contract; or have in any manner, directly or indirectly, sought by agreement or collusion, or communication, or conference with any Bidder, firm, or person to fix the price or prices in the attached Bid or of any other Bidder, or to fix any overhead, profit, or cost elements of the Bid price or the Bid price in any other Bidder, or to secure through any collusion, conspiracy, connivance, or unlawful agreement any advantage against (Recipient), or any person interested in the proposed Contract;

5. The price or prices quoted in the attached Bid are fair and proper and are not tainted by any collusion, conspiracy, connivance, or unlawful agreement on the part of the Bidder or any other of its agents, representatives, owners, employees or parties in interest, including this affidavit.

By: Scott Tyre

Title: Vice President

Sworn to (or affirmed) and subscribed before me by means of ☒ physical presence or ☐ online notarization, this 28 day of NOV, 2023 by Scott Tyre in the state of Florida County of Lake.

Notary Public

My Commission Expires: 9/6/2025

CHRISTINA L. LEE
Notary Public
State of Florida
Comm# HH172757
Expires 9/6/2025

END OF SECTION

ocoee
florida

ITB#24-002 BID CONFLICT OF INTEREST DISCLOSURE FORM

The award of this contract is subject to the provisions of Chapter 112, Florida Statutes. All Bidders must disclose within their Bid: the name of any City of Ocoee employee, Mayor or City Commissioner, other City Official, or City Consultants, who owns assets or capital stock, directly or indirectly, in the Bidder's firm or any of its branches, or would directly or indirectly benefit by the profits or emoluments of this Bid. (Indirect ownership or benefit applies to any members of his or her immediate family.) Bidder certifies that no member of the entity's ownership or management is presently applying for an employee position or actively seeking an elected position with the City. In the event that a conflict of interest is identified in the provision of services, Bidder agrees to immediately notify the City in writing.

The purpose of this disclosure form is to give the City the information needed to identify potential conflicts of interest for the City Commission, Staff, and other key City employees and consultants involved in the award and administration of this contract.

According to Chapter 112, Florida Statutes, the term "conflict of interest" "means a situation in which regard for a private interest tends to lead to disregard of a public duty or interest", and refers to situations in which financial or other personal considerations may adversely affect, or have the appearance of adversely affecting, an employee's professional judgment in exercising any City duty or responsibility in administration, management, instruction, research, or other professional activities.

Please check one of the following statements and attach additional documentation if necessary:

X To the best of our knowledge, the undersigned firm has no potential conflict of interest for this Bid.

_____ The undersigned firm, by attachment to this form, submits information which may be a potential conflict of interest for this Bid.

Acknowledged by:

J. Malever Construction Company
Firm Name

Scott Tyre
Signature

Scott Tyre, Vice President
Name and Title (Print or Type)

11/28/2023
Date

SECTION 00481
CERTIFICATION OF NONSEGREGATED FACILITIES

The Bidder certifies that he does not maintain or provide for his employees any segregated facilities at any of his establishments, and that he does not permit his employees to perform their services at any location, under this control, where segregated facilities are maintained. The Bidder certifies further that he will not maintain or provide for his employees any segregated facilities at any of his establishments, and that he will not permit his employees to perform their services at any location under his control where segregated facilities are maintained. The Bidder agrees that a breach of this certification will be a violation of the Equal Opportunity clause in any contract resulting from acceptance of this Bid. As used in this certification, the term "segregated facilities" means any waiting rooms, work areas, restrooms and washrooms, restaurants and other eating areas, time clocks, locker rooms and other storage and dressing areas, parking lots, drinking fountains, recreation or entertainment area, transportation, and housing facilities provided for employees on the basis of race, color, religion, or national origin, because of habit, local custom, or otherwise. The Bidder agrees that (except where he has obtained identical certification from proposed subcontractors for specific time periods) he will obtain identical certifications from proposed subcontractors prior to the award of subcontracts exceeding $10,000 which are not exempt from the provisions of the Equal Opportunity clause, and that he will retain such certifications in his files.
The nondiscriminatory guidelines as promulgated in Section 202, Executive Order 11246, and as amended by Executive Order 11375 and as amended, relative to Equal Opportunity for all persons and implementations of rules and regulations prescribed by the United States Secretary of Labor are incorporated herein.

Note:

The penalty for making false statements in offers is prescribed in 18 U.S.C. 1001.

Date NOV. 28, 2023.

J. Malever Construction

By: Scott Tyre Scott Tyre

Vice President
(Title)

Official Address (including Zip Code):

301 Sampey Rd.
Groveland, FL 34736

ATTACH AND INCLUDE AS PART OF PROPOSAL FORM; FAILURE TO DO SO MAY BE CAUSE FOR DISQUALIFICATION OF YOUR BID.

END OF SECTION

SECTION 00482
(Page 1 of 2)

SWORN STATEMENT UNDER SECTION 287.133(3)(a), FLORIDA STATUTES, ON PUBLIC ENTITY CRIMES

THIS FORM MUST BE SIGNED IN THE PRESENCE OF A NOTARY PUBLIC OR OTHER OFFICER AUTHORIZED TO ADMINISTER OATHS.

1. This sworn statement is submitted to City of Ocoee, Florida by J. Malever by Scott Tyre, Vice President.
(Print individual's Name & Title)

whose business address is 301 Sampey Rd. Groveland, FL 34736

2. I understand that a "public entity crime" as defined in Paragraph 287.133(1)(g), Florida Statutes, means a violation of any state or federal law by a person with respect to and directly related to the transaction of business with any public entity or with an agency or political subdivision of any other state or with the United States, including, but not limited to, any bid or contract for goods or services to be provided to any public entity or an agency or political subdivision of any other state or of the United States and involving antitrust, fraud, theft, bribery, collusion, racketeering, conspiracy, or material representation.

3. I understand that "convicted" or "conviction" as defined in Paragraph 287.133(1)(b), Florida Statutes, means a finding of guilt or a conviction of a public entity crime, with or without an adjudication of guilt, in any federal or state trial court of record relating to charges brought by indictment or information after July 1, 1989, as a result of a jury verdict, non-jury trial, or entry of a plea of guilty or nolo contendere.

4. I understand that an "affiliate" as defined in Paragraph 287.133(1)(a), Florida Statutes, means:

   a. A predecessor or successor of a person convicted of a public entity crime: or

   b. An entity under the control of any natural person who is active in the management of the entity and who has been convicted of a public entity crime. The term "affiliate" includes those officers, directors, executives, partners, shareholders, employees, members, and agents who are active in the management of an affiliate. The ownership by one person of shares constituting a controlling interest in another person, or a pooling of equipment or income among persons when not for fair market value under an arm's length agreement, shall be a *prima facie* case that one person controls another person. A person who knowingly enters into a joint venture with a person who has been convicted of a public entity crime in Florida during the preceding 36 months shall be considered an affiliate.

5. I understand that a "person" as defined in Paragraph 287.133(1)(e), Florida Statutes, means any natural person or entity organized under the laws of any state or of the United States with the legal power to enter into a binding contract and which bids or applies to bid on contracts for the provision of goods or services let by a public entity, or which otherwise transacts or applies to transact business with a public entity. The term "person" includes those officers, directors, executives, partners, shareholders, employees, members, and agents who are active in management of an entity.

6. Based on information and belief, the statement I have marked below is true in relation to the entity submitting this sworn statement. (please indicate which statement applies).

X Neither the entity submitting this sworn statement, or one or more of its officers, directors, executives, partners, shareholders, employees, members, or agents who are active in management of the entity, nor any affiliate of the entity have been charged with and convicted of a public entity crime subsequent to July 1, 1989.

_____ The entity submitting this sworn statement, or one or more of the officers, directors, executives, partners, shareholders, employees, members, or agents who are active in management of the entity, or an affiliate of this entity has been charged with and convicted of a public entity crime subsequent to July 1, 1989.

_____ The entity submitting this sworn statement, or one or more of the officers, directors, executives, partners, shareholders, employees, members, or agents who are active in management of the entity, or an affiliate of this entity has been charged with and convicted of a public entity crime subsequent to July 1, 1989. However, there has been a subsequent proceeding concerning the conviction before a Hearing Officer of the State of Florida, Division of Administrative Hearings. The final order entered by the Hearing Officer determined that it was not in the public interest to place the entity submitting this sworn statement on the convicted vendor list. (Please attach a copy of the final order.)

I UNDERSTAND THAT THE SUBMISSION OF THIS FORM TO THE CONTRACTING OFFICER FOR THE PUBLIC ENTITY IDENTIFIED IN PARAGRAPH 1 (ONE) ABOVE IS FOR THAT PUBLIC ENTITY ONLY AND, THAT THIS FORM IS VALID THROUGH 11/28/2023. I ALSO UNDERSTAND THAT I AM REQUIRED TO INFORM THE PUBLIC ENTITY PRIOR TO ENTERING INTO A CONTRACT IN EXCESS OF THE THRESHOLD AMOUNT PROVIDED IN SECTION 287.017, FLORIDA STATUTES FOR CATEGORY TWO OF CHANGE IN THE INFORMATION CONTAINED IN THIS FORM.

Scott Tyre
(Signature)

Date: NOV. 28, 2023

J. Malever Construction
Name of Bidder (Contractor)

STATE OF Florida

COUNTY OF Lake

Sworn to (or affirmed) and subscribed before me by means of ☒ physical presence or ☐ online notarization, this 28 day of November, 2023, by Scott Tyre in the state of Florida County of Lake.

CHRISTINA L. LEE
Notary Public
State of Florida
Comm# HH172757
Expires 9/6/2025

Notary Public

My Commission Expires: 9/6/2025

END OF SECTION

SECTION 00483
CERTIFICATION OF NONDISCRIMINATORY LABOR PRACTICES

This certification relates to a construction contract proposed by the City of Ocoee

Equal Opportunity Employment: The Contractor shall not discriminate on the basis of race, color, national origin, gender, age, handicapped status, veteran status, and/or religion in performing the work governed by this contract. The City is an Equal Opportunity Employer (EOE) and as such encourages all contractors to comply with EOE regulations. Any subcontract the Contractor may enter into shall include this clause with the same degree of application being encouraged.

I am the undersigned prospective construction contractor or subcontractor. I certify that:

(1) I ___X___ have/_____ have not participated in a previous contract or subcontract subject to the Equal Opportunity Clause and

(2) if I have participated in a previous contract or subcontract subject to the Equal Opportunity Clause, I ___X___ have/ _____ have not filed with the Joint Reporting Committee, the Director of the Office of Federal Contract Compliance Programs, or the Equal Employment Opportunity Commission all reports due under the applicable filing requirements.

I understand that, if I have participated in a previous contract or subcontract subject to the Equal Opportunity Clause and have failed to file all reports due under the applicable filing requirements, I am not eligible, and will not be eligible, to have my bid or offer considered, or to enter into the proposed contract or subcontract, unless and until I make an arrangement regarding such reports that is satisfactory to the office where the reports are required to be filed.

I agree that I will obtain identical certifications from prospective lower-tier sub-contractors when I receive bids or offers or initiate negotiations for any lower-tier construction subcontracts with a price exceeding $10,000. I also agree that I will retain such certifications in my files.

Date __Nov. 28__, 20_23_. By: _____
(Signature of Authorized Official)

J. Malever Construction
(Name of Prospective Construction Contractor or Subcontractor)

301 Sampey Rd. Groveland, FL 34736
(Address of Prospective Construction Contractor or Subcontractor)

352-429-9507 (Telephone Number)

59-3551606 (Employer Identification Number)

END OF SECTION

Certification Regarding Scrutinized Companies' Lists

The Respondent certifies that the company is not participating in a boycott of Israel. The Respondent certifies that the Respondent is not on the Scrutinized Companies that Boycott Israel List, not on the Scrutinized Companies with Activities in Sudan List, not on the Scrutinized Companies with activities in the Iran Petroleum Energy Sector List, or has been engaged in business operations in Cuba or Syria, as those terms are used and defined in sections 287.135 and 215.473 of the Florida Statutes. In the event that the Respondent is unable to provide such certification but still seeks to be considered for award of this solicitation, the Respondent shall, on a separate piece of paper, clearly state that it is on one or both of the Scrutinized Companies lists and shall furnish together with its proposal a duly executed written explanation of the facts supporting any exception to the requirement for certification that it claims under Section 287.135 of the Florida Statutes. The Respondent agrees to cooperate fully with the City in any investigation undertaken by the City to determine whether the claimed exception would be applicable. The City shall have the right to terminate any contract resulting from this solicitation for default if the Respondent is found to have submitted a false certification, or to have been placed on the Scrutinized Companies that Boycott Israel List, or to have been placed on the Scrutinized Companies for Activities in Sudan List, or the Scrutinized Companies with Activities in the Iran Petroleum Energy Sector List, or has been engaged in business operations in Cuba or Syria.

Name of Respondent: J. Malever Construction

By: Scott Tyre
(Authorized Signature)

Title: Scott Tyre, Vice President

Date: 11/28/2023

PROJECT MANUAL

ITB #24-002
W. Oakland Avenue Reconstruction

ocoee

florida

November, 2023

Prepared by:

City of Ocoee and CPH No. 06012

SECTION 00300

BID FORM

SUBMITTED: 12/01/2023
(Date)

PROJECT IDENTIFICATION: CITY OF OCOEE BID

ITB #24-002 W. Oakland Ave Reconstruction

NAME OF BIDDER: American Persian Engineering and Construction LLC DBA APEC LLC

BUSINESS ADDRESS: 5401 S. Kirkmand Rd #336 PHONE NO.: (407)928-6811
CITY, STATE, ZIP: Orlando, FL 32819

CONTRACTOR'S FEDERAL I.D. NUMBER 27-2469029

CONTRACTOR'S FLORIDA LICENSE NO.: CGC060385

THIS BID IS SUBMITTED TO: City of Ocoee, Florida (hereinafter called Owner)

1. The undersigned Bidder proposes and agrees, if this Bid is accepted, to enter into an Agreement with Owner in the form included in the Contract Documents to perform and furnish all Work, as specified or indicated in the Contract Documents for the Contract Price and within the Contract Time indicated in this Bid Form and in accordance with the other terms and conditions of the Contract Documents.

2. Bidder accepts all of the terms and conditions of the Bidding Documents, including, without limitation, those dealing with the disposition of Bid Bond. This Bid will remain open for ninety (90) calendar days after the day of Bid opening. Bidder will sign and deliver the required number of counterparts of the Amendment to the Agreement with the Bonds and other documents required by the Bidding Requirements within ten (10) days after the date of Owner's Notice of Intent to Award.

3. In submitting this Bid, Bidder makes all representations required by the Instructions to Bidders and the Agreement and further warrants and represents that:

   a. Bidder has examined copies of all the Bidding Documents and of the following Addenda:

No. 1	Dated Nov 9, 2023	No.		Dated:	
No. 2	Dated Nov 29,2023	No.		Dated:	
No. 3	Dated Nov 30, 2023	No.		Dated:	
No.	Dated	No.		Dated:	

(Receipt of all which is hereby acknowledged) and also copies of the Invitation for Bids and the Instructions to Bidders.

b. Bidder has familiarized itself with the nature and extent of the Contract Documents, work, site, locality, and all local conditions and laws and regulations that in any manner may affect cost, progress, performance or furnishing the Work.

c. Bidder has carefully studied all reports of explorations and tests of subsurface conditions at or contiguous to the site and all drawings of physical conditions in or relating to existing surface of subsurface structures at or contiguous to the site (except Underground Facilities) which have been identified in the Supplementary Conditions, as provided in paragraph 4.02.1 of the General Conditions. Bidder accepts the determination set forth in paragraph SC-4.02 of the Supplementary Conditions of the extent of the "technical data" contained in such reports and drawings upon which Bidder is entitled to rely, as provided in paragraph 4.02 of the General Conditions. Bidder acknowledges that such reports and drawings are not Contract Documents and may not be complete for Bidder's purposes. Bidder acknowledges that Owner and Engineer do not assume responsibility for the accuracy or completeness of information and data shown or indicated in the Bidding Documents with respect to Underground Facilities at or contiguous to the site.

d. Bidder has obtained and carefully studied (or assumes responsibility for having done so) all such additional or supplementary examinations, investigations, explorations, tests, studies and data concerning conditions (surface, subsurface and Underground Facilities) at or contiguous to the site or otherwise which may affect cost progress, performance or furnishing of the Work, or which relate to any aspect of the means, methods, techniques, sequences and procedures of construction to be employed by Bidder and safety precautions and programs incident thereto. Bidder does not consider that any additional examinations, investigations, explorations, tests, studies or data are necessary for the determination of this Bid for performance and furnishing of the Work in accordance with the times, price and other terms and conditions of the Contract Documents.

e. Bidder understands the full extent and scope of Work to be performed by Owner and others at the site that relates to Work for which this Bid is submitted.

f. Bidder has correlated the information known to Bidder, information and observations obtained from visits to the site, reports and drawings identified in the Contract Documents and all additional examinations, investigations, explorations, tests, studies and date with the Contract Documents.

g. Bidder has given Engineer written notice of all conflicts, errors, ambiguities or discrepancies that Bidder has discovered in the Contract Documents and the written resolution thereof by Engineer is acceptable to Bidder, and the Contract

Documents are generally sufficient to indicate and convey understanding of all terms and conditions for performing and furnishing the Work for which this Bid is submitted.

h. This Bid is genuine and not made in the interest of or on behalf of any undisclosed person, firm or corporation and is not submitted in conformity with any agreement or rules of any group, association, organization or corporation; Bidder has not directly or indirectly induced or solicited any other Bidder to submit a farce or sham Bid; Bidder has not solicited or induced any person, firm or corporation to refrain from bidding; and Bidder has not sought by collusion to obtain for itself any advantage over any other Bidder or over Owner.

i. Bidder hereby agrees to commence Work under this contract on or before a date to be specified in the Notice to Proceed and to fully complete all work of the project within the Contract Time specified in the Scope of Work Agreement (Section 00500). Bidder further accepts the provisions of the Scope of Work Agreement as to liquidated damages and agrees to pay as liquidated damages the amount stated in the Scope of Work Agreement (Section 00500), for each consecutive calendar day completion of the Work is delayed.

Completion Schedule:

1) The Work shall be substantially complete within the Contract Time specified in Article 3.1 of the Proposed Scope of Work Agreement (Section 00500).

2) The Work shall be finally complete within the contract Time specified in Article 3.2 of the Proposed Scope of Work Agreement (Section 00500).

4. All bid items shall include all materials, equipment, labor, permit fees, taxes, tests, miscellaneous costs of all types, overhead, and profit for the item to be complete, in place, and ready for operation in the manner contemplated by the Contract Documents. Bidder submits the **TOTAL BID OR TOTAL BASE BID** to perform all the Work, as required by the Drawings and Specifications.

5. The following documents are made a condition of this Bid:

a. **Bidding Documents and shall include the following**:

1. Bid Forms (entire Section 00300, 00301, 00301A, 00302, 00303 and 00310)
2. Bid Bond (Surety Bond or Cashier's Check). (Section 00410)
3. Non-collusion Affidavit (Section 00480)
4. Conflict of Interest Disclosure (Section 00480a)
5. Certification of Non-segregated Facilities (Section 00481)
6. Sworn Statement on Public Entity Crimes (Section 00482)
7. Certification of Nondiscriminatory Labor Practices (Section 00483)
8. Certification Regarding Scrutinized Companies' List (Section 00484)

ITB #24-002 Bid Form (Page 1 of 3)					
Item No.	**Item Description**	**Quantity**	**Unit**	**Unit Price**	**Total Price**
	GENERAL				
1.01	MOBILIZATION	1	LS	$ 400,000.00	$ 400,000.00
1.02	MAINTENANCE OF TRAFFIC	1	LS	$ 10,000.00	$ 10,000.00
1.03	SEDIMENT BARRIER	1,678	LF	$ 4.00	$ 6,712.00
1.04	INLET PROTECTION SYSTEM	5	EA	$ 150.00	$ 750.00
1.05	CLEARING & GRUBBING	1.87	AC	$ 250,000.00	$ 467,500.00
1.06	REMOVAL OF EXISTING CONCRETE	978	SY	$ 20.00	$ 19,560.00
1.07	MAILBOX, RELOCATE	14	EA	$ 120.00	$ 1,680.00
1.08	WEIGH SCALE REMOVAL & RESTORATION	1	LS	$ 40,000.00	$ 40,000.00
1.09	REGULAR EXCAVATION	2,179	CY	$ 15.00	$ 32,685.00
1.10	EMBANKMENT	195	CY	$ 10.00	$ 1,950.00
1.11	TYPE B STABILIZATION (LBR40) (12")	4,050	SY	$ 10.00	$ 40,500.00
1.12	OPTIONAL BASE GROUP 09 CRUSHED CONC. (10")	3,205	SY	$ 40.00	$ 128,200.00
1.13	MILLING EXISTING ASPHALT PAVEMENT, 1" AVG DEPTH	207	SY	$ 30.00	$ 6,210.00
1.14	SUPERPAVE ASHPALT CONC. TRAFFIC C, 1"	11	TN	$ 500.00	$ 5,500.00
1.15	SUPERPAVE ASHPALT CONC. TRAFFIC C, 2"	291	TN	$ 500.00	$ 145,500.00
1.16	INLETS, CURB, TYPE 9, P BOT <10'	8	EA	$ 10,500.00	$ 84,000.00
1.17	INLETS, CURB, TYPE 9, J BOT, <10'	1	EA	$ 12,500.00	$ 12,500.00
1.18	INLETS, CURB, TYPE 9, PARTIAL	1	EA	$ 9,500.00	$ 9,500.00
1.19	INLETS, VALLEY GUTTER, P BOTTOM <10'	6	EA	$ 10,600.00	$ 63,600.00
1.20	INLETS, VALLEY GUTTER, PARTIAL	2	EA	$ 10,000.00	$ 20,000.00
1.21	MANHOLES, J-8, <10'	3	EA	$ 5,000.00	$ 15,000.00
1.22	MANHOLE, ADJUST	3	EA	$ 5,000.00	$ 15,000.00
1.23	PIPE CULVERT, RCP, ROUND, 24" S/CD	1,133	LF	$ 130.00	$ 147,290.00
1.24	PIPE CULVERT, RCP, ROUND, 30" S/CD	204	LF	$ 142.00	$ 28,968.00
1.25	PIPE CULVERT, RCP, OTHER SHAPE - ELIP/ARCH, 34"X53" S/CD	78	LF	$ 145.00	$ 11,310.00
1.26	CURB AND GUTTER, TYPE F	1,069	LF	$ 65.00	$ 69,485.00
1.27	CURB AND GUTTER, TYPE F, DROP CURB	681	LF	$ 60.00	$ 58,860.00
1.28	CONCRETE CURB, TYPE B	1,798	LF	$ 50.00	$ 89,900.00
1.29	CONCRETE CURB, TYPE D	711	LF	$ 50.00	$ 35,550.00
1.30	CONCRETE, SIDEWALK, CURB RAMP, 4" THICK	1,858	SY	$ 75.00	$ 139,350.00
1.31	CONCRETE, DRIVEWAYS, TRAIL, SEATING PADS, 6" THICK	1,500	SY	$ 90.00	$ 135,000.00
1.32	PAVERS, ARCHITECTURAL, ROADWAY W/ IN-SITU INFILROMETER (6)	701	SY	$ 140.00	$ 98,140.00
1.33	DETECTABLE WARNINGS	416	SF	$ 40.00	$ 16,640.00
1.34	BEDDING STONE (15", NO. 57 STONE)	453	TN	$ 60.00	$ 27,180.00

ITB #24-002 Bid Form (Page 2 of 3)					
Item No.	**Item Description**	**Quantity**	**Unit**	**Unit Price**	**Total Price**
1.35	PERFORMANCE TURF, SOD	6,436	SF	$ 12.00	$ 77,232.00
1.36	SINGLE POST SIGN, F&I, GM, 12-20 SF	10	AS	$ 350.00	$ 3,500.00
1.37	PAINTED PAVEMENT MARKINGS, FINAL SURFACE	1	LS	$ 25,000.00	$ 25,000.00
1.38	THERMOPLASTIC, STD, WHITE, SOLID, 12"	48	LF	$ 5.00	$ 240.00
1.39	THERMOPLASTIC, STD, WHITE, SOLID, 24"	104	LF	$ 10.00	$ 1,040.00
1.40	THERMOPLASTIC, STD, WHITE, MESSAGE	2	EA	$ 300.00	$ 600.00
1.41	THERMOPLASTIC, STD, OPEN GRADED, WHITE, SOLID, 6"	0.0352	GM	$ 50,000.00	$ 1,760.00
1.42	THERMOPLASTIC, STD, OPEN GRADED, YELLOW, SOLID, 6"	0.0112	GM	$ 50,000.00	$ 560.00
	UTILITIES				
2.01	REMOVE EXISTING 2" PIPE	330	LF	$ 20.00	$ 6,600.00
2.02	REMOVE EXISTING 3" PIPE	105	LF	$ 20.00	$ 2,100.00
2.03	REMOVE EXISTING 6" PIPE	1,125	LF	$ 50.00	$ 56,250.00
2.04	2" PE WATER MAIN	30	LF	$ 40.00	$ 1,200.00
2.05	4" DI WATER MAIN	295	LF	$ 80.00	$ 23,600.00
2.06	6" DI WATER MAIN	580	LF	$ 140.00	$ 81,200.00
2.07	8" DI WATER MAIN	382	LF	$ 120.00	$ 45,840.00
2.08	GATE VALVE WITH BOX (6")	5	EA	$ 8,000.00	$ 40,000.00
2.09	GATE VALVE WITH BOX (8")	3	EA	$ 9,000.00	$ 27,000.00
2.10	TAPPING SLEEVE AND VALVE ASSEMBLY (2")	1	EA	$ 1,500.00	$ 1,500.00
2.11	TAPPING SLEEVE AND VALVE ASSEMBLY (6")	2	EA	$ 15,000.00	$ 30,000.00
2.12	CUT-IN CONNECTION TO EXISTING WATER MAIN	8	EA	$ 5,000.00	$ 40,000.00
2.13	LINE STOP ASSEMBLY (6")	2	EA	$ 7,000.00	$ 14,000.00
2.14	2" BLOW OFF ASSEMBLY	1	EA	$ 5,000.00	$ 5,000.00
2.15	OFFSET AIR RELEASE VALVE ASSEMBLY (2" DIAMETER)	2	EA	$ 3,500.00	$ 7,000.00
2.16	REMOVE AND SALVAGE FIRE HYDRANT	3	EA	$ 6,500.00	$ 19,500.00
2.17	CLOSE, PLUG, AND ABANDON EXISTING 3" GATE VALVE	1	EA	$ 3,000.00	$ 3,000.00
2.18	1" WATER SERVICE CONNECTION	12	EA	$ 20.00	$ 240.00
2.19	8" PVC SAN SEWER (0-6 FT. DEEP)	308	LF	$ 135.00	$ 41,580.00
2.20	4' DIA. SAN SEWER MANHOLE (0-6 FT. DEEP)	1	EA	$ 11,000.00	$ 11,000.00
2.21	SINGLE LATERAL SERVICE (0-8 FT DEEP)	9	EA	$ 500.00	$ 4,500.00
	LANDSCAPE & HARDSCAPE				
3.01	DECORATIVE WALL, F&I, COMPLETE	2	EA	$ 25,000.00	$ 50,000.00
3.02	DECORATIVE COLUMN, F&I, COMPLETE	4	EA	$ 5,000.00	$ 20,000.00
3.03	DECORATIVE BENCHES, F&I, COMPLETE	8	EA	$ 6,000.00	$ 48,000.00
3.04	CONCRETE RIBBON CURB	313	LF	$ 80.00	$ 25,040.00
3.05	LANDSCAPE IRRIGATION SYSTEM, F&I, COMPLETE	1	EA	$ 40,000.00	$ 40,000.00

ITB #24-002 Bid Form (Page 2 of 3)					
Item No.	**Item Description**	**Quantity**	**Unit**	**Unit Price**	**Total Price**
3.06	MULCH	92	CY	$ 45.00	$ 4,140.00
3.07	TREE ROOT BARRIER	2,192	LF	$ 45.00	$ 98,640.00
3.08	CRAPE MYRTLE	23	EA	$ 200.00	$ 4,600.00
3.09	HIGHRISE LIVE OAK	11	EA	$ 500.00	$ 5,500.00
3.10	CABBAGE PALM	22	EA	$ 200.00	$ 4,400.00
3.11	FIREFLY FIREBUSH	232	EA	$ 100.00	$ 23,200.00
3.12	MRS SCHILLERS VIBURNUM	98	EA	$ 100.00	$ 9,800.00
3.13	BABY PETE AGAPANTHUS	1,749	EA	$ 35.00	$ 61,215.00
3.14	MUHLY GRASS	327	EA	$ 20.00	$ 6,540.00
3.15	POWDERPUFF MIMOSA	1,802	EA	$ 20.00	$ 36,040.00
3.16	PEACH DRIFT ROSE	180	EA	$ 100.00	$ 18,000.00
	DUKE ENERGY ITEM				
4.01	6" PVC SCHEDULE 40 CONDUIT F&I	1,500	LF	$ 110.00	$ 165,000.00
Total Base Bid Cost:					**$ 3,575,177.00**
Written Total Base Bid Cost:	**Three Million Five Hundred Seventy-Five Thousand One Hundred Seventy-Seven**				

LEGEND: AC = Acre; AS = Assembly; CY = Cubic Yard; GM = Gross Mile; EA = Each; LF = Linear Foot; LS = Lump Sum; SY = Square Yard; TN = U.S. Ton

Company Name: American Persian Engineering and Construction LLC DBA APEC LLC

By: _____

Notes:

1. Pay items obtained from the Florida Department of Transportation (FDOT) Basis of Estimates (BOE) dated 2014.
2. Reference Specification Section 01025 Measurement and Payment for a detailed list of Bid Items.
3. All areas disturbed by construction are to be restored to match existing to equal or better condition.
4. The Contractor is to verify all quantities prior to BID.

7. The Bidder acknowledges that the City specifically reserves the right to accept and make an award to a Bidder that has not submitted the lowest Bid when, in Owner's sole and absolute discretion, it determines that action to be in its best interest. The terms used in this Invitation to Bid, which are defined in the General Conditions and included as part of the Contract Documents, have the meanings assigned to them in the General Conditions.

8. The work shall be performed under a Florida Underground Utility or General Contractor license. Contract shall not be awarded unless proof of valid license(s) is provided.

9. It is understood that where quantities for unit price work have been presented on the Bid Form, they are approximate only and are solely for the purpose of facilitating the comparison of bids, and that the Contractor's compensation will be computed upon the basis, described in the measurement and payment clauses in the specifications contained herein.

10. **BASE BID - SCHEDULE OF MANUFACTURERS/SUPPLIERS**

If the foregoing Schedule of Bid Items is presented in a Base Bid format, the undersigned as Bidder, agrees that the Contract, if awarded, will be on the basis of the materials and equipment named in the Contract Documents, in accordance with Article 10 of the Instructions to Bidders (Section 00100). The undersigned, as Bidder, also agrees that the Total Bid reflects the equipment and material supplied by one of the listed manufacturers/suppliers, by circling "A", "B", "C", etc. If the Bidder desires to propose an alternate manufacturer/supplier, he may write in the name of such alternate in the substitution list included within this Bid Form, but he must, nevertheless, also circle one of the listed manufacturers/suppliers. If the proposed alternate manufacturer/supplier is determined "not equivalent" by the Engineer, the Bidder must furnish equipment and/or material items by the circled manufacturer/supplier. If the Bidder fails to indicate which listed manufacturer/supplier he intends to use if an alternate is rejected, he must use the manufacturer/supplier listed as "A," or such other listed manufacturer as the City may approve. Also, if the Bidder circled more than one listed manufacturer/supplier, he must use the first manufacturer/supplier circled (unless an alternate is approved).

11. **SUBSTITUTIONS AND "OR EQUAL"**

The undersigned as Bidder agrees that substitutions, or "equal," items will not be considered until after the effective date of the Agreement and will be evaluated in accordance with paragraphs 6.05.1 and 6.05.2 of the General Conditions. In addition to the reimbursement required under the General Conditions, the Contractor shall also reimburse the Owner for any engineering costs directly attributable to the change in manufacturers/suppliers caused by the acceptance of proposed alternates, such as, additional field trips for the Engineer, additional redesign costs, additional review costs, etc. Other costs directly attributable to the change in manufacturers/suppliers caused by the acceptance of proposed alternates, such as; increased electrical requirements, larger building, additional pumps or tankage, etc., shall be borne by others and not the Owner.

If Bidder intends to propose substitutions or "equal" items after the effective date of the Agreement, it is agreed that these items must be listed on the Substitution List included within this Bid Form, with a deductive amount representing 50 percent of the total savings between the named Base Bid item and the proposed item. "Base Bid" item substitutions providing to the Owner equipment or material cost savings of less than $1,000 will not be considered. The undersigned, as Bidder, also agrees that if a substitution or "equal" item is not listed on the Substitution List included with the Bid, all of the savings between the named item and the proposed item will go to the Owner, if the Owner accepts the proposed item in accordance with paragraphs 6.05.1 and 6.05.2 of the General Conditions. The Owner may request, and the undersigned Bidder shall supply, complete information on proposed substitutions. Such information shall be the manufacturer's current published or preprinted information for the specific substitution.

12. As Bidder, I hereby certify that I am aware and understand that the City of Ocoee in its sole discretion reserves the right to waive technicalities or irregularities, to reject any or all Bids, and/or to accept that Bid which is in the best interest of the City. The award of this Bid, if made, may be based on considerations other than total cost, and may be awarded based on various considerations, including but not limited to: Bidder experience and whether the Bid, in the judgment of the City, is the most responsive to the City's needs.

SUBSTITUTION LIST

Bidder offers the following substitutions and "equal" items.

Equipment Item or Material	Spec Section	Alternative Manufacturer/Supplier (List One Only)	Deductible Amount* (Indicate Whether Lump Sum or Unit Price)

Represents 50 percent of the difference in cost in accordance with the General Conditions
(Minimum Deductible Amount per Substitution Item shall be $1,000)
(Bidder may make additional copies of this page as required.)

N/A

Strike out (X) non-applicable signature block and complete applicable block. (ALL SIGNATORIES MUST HAVE THEIR NAMES PRINTED OR TYPED BELOW THEIR SIGNATURES)

If Bidder is:

SOLE PROPRIETORSHIP

(SEAL)

(Individual's Signature)

(Individual's Name)

doing business as

Business Address:

Phone No.:

Florida License No.: _____

N/A

A PARTNERSHIP

(SEAL)

(Partnership Name)

(General Partner's Signature)

(General Partner's Name)

Business address:

Phone No.:

Florida License No.: _____

Strike out (X) non-applicable signature block and complete applicable block. (ALL SIGNATORIES MUST HAVE THEIR NAMES PRINTED OR TYPED BELOW THEIR SIGNATURES)

If Bidder is:

A CORPORATION

American Persian Engineering and Construction LLC DBA APEC LLC

(Corporation Name)

Florida

(State of Incorporation)

By

Arman Pourmirza

(Name of person authorized to sign)

Vice President

(Title)

(Authorized Signature)

(Corporate Seal)

Attest

Mehrdad Vaziran

(Secretary)

Business address: 5401 S. Kirkmand Rd #336
Orlando, FL 32819

Phone No.: (407)619-7888

Corporation President: President

Florida License No.: CGC060385

Strike out (X) non-applicable signature block and complete applicable block. (ALL SIGNATORIES MUST HAVE THEIR NAMES PRINTED OR TYPED BELOW THEIR SIGNATURES)

If Bidder is:

A JOINT VENTURE

By

(Name)

(Address)

By

(Name)

(Address)

Business Address:

Phone No.:

Florida License No.:

(Each joint venturer must sign. The manner of signing for each individual, partnership, and corporation that is a party to the joint venture should be in the manner indicated above.)

Florida License No.:

N/A

13. List the following in connection with the Surety which is providing the Bid Bond:

Surety's Name: The Gray Insurance Company

Surety's Address: P.O BOX 6202 Metairie , LA
70009-6202

14. Name and address of Surety's resident agent for service of process in Florida:
Nielson, Wojtowicz, Neu & Associates

1000 Central Ave, Suite #200
St. Petersburg, FL 33705

727-209-1803

CORPORATE AUTHORITY TO EXECUTE DOCUMENTS

I HEREBY CERTIFY that a meeting of the Board of Directors of American Persian Engineering and Construction LLC DBA APEC LLC, a corporation under
(Contractor's Corporate Name)
the laws of the State of Florida, held on the 4th day of Dec, 2023, the following resolution was duly passed and adopted:

"RESOLVED, that _____ Arman Pourmirza
(signature of individual) (typed name of individual)
as Vice President of the corporation, is hereby authorized to execute and all documents required to be signed by an officer of the Corporation in order to submit a valid bid, contract and bond for

CITY OF OCOEE
ITB #24-002 W. Oakland Ave Reconstruction

between the CITY OF OCOEE, a municipal corporation, and this corporation, and that his execution thereof, attested by the Secretary of the corporation and with corporate seal affixed shall be the official act and deed of this corporation."

I FURTHER CERTIFY that said resolution is now in full force and effect.

IN WITNESS WHEREOF, I have hereunto set my hand and affixed the official seal of the corporation this 4th day of Dec, 2023
(CORPORATE SEAL)

_____ (Corporate Secretary)

STATE OF Florida
CITY OF orange

The foregoing instrument was acknowledged before me this 4 day of December, 2023 by Arman Pourmirza (name of officer or agent, title of officer or agent), of Vice President (name of corporation acknowledging), a APEC (state or place of incorporation) corporation, on behalf of the corporation. He/She is personally known to me or has produced identification Drivers License (type of identification) as identification and did/did not take an oath.

_____
(Notary Public)
My Commission Expires: 2/26/2027

KATHIE RODRIGUEZ
Notary Public
State of Florida
Comm# HH366367
Expires 2/26/2027

END OF SECTION

SECTION 00301
QUESTIONNAIRE

Bidder shall fill out questionnaire form with all information pertinent to his/her company: failure of the Bidder to provide all information required in this form may cause your Bid to be deemed Non-Responsive.

DATE: 12/04/2023

PROJECT IDENTIFICATION: City of Ocoee
ITB #24-002 W. Oakland Ave Reconstruction

NAME OF BIDDER: American Persian Engineering and Construction LLC DBA APEC LLC

BUSINESS ADDRESS: 5401 s. Kirkman Rd #336, Orlando, Fl 32819

TELEPHONE NO.: (407)928-6811 EMAIL Allaccess@apec2.com

CONTRACTOR'S FLORIDA LICENSE NO. CGC 060385

The undersigned warrants the truth and accuracy of all statements and answers herein contained. Include additional sheets if necessary.

1. How many years has your organization been in business licensed Florida Contractor?
14 yrs

2. Describe and give the date and owner contat information of the last 3 (three) projects that you have completed in the last 10 (ten) years with surface and sub-surface construction elements included within the proposed project scope?

1) Taft Vineland Road construction, Paving, Excavation, Subsoil excavation, base and asphalt construction,1,500 LF of combined 66",72", 36", 24" pipe storm water construction. Roadway construction, Manhole and drainage structures; OWNER: Orange County Highway construction, Shawn Kennedy, Shawn.Kennedy@OCFL.NET, (407)836-7936 Project Completion 03/15/2015

2) Poinciana Blvd, New Road construction. Pond construction, 1000 LF Storm water pipe 24" placement. Manhole and drainage structures construction, paving, sidewalk and sodding, MOT and utility coordination. Osceola County, Rene Laporte, Rene.Laporte@osceola.org, (321)284-6888,

3) Tripplet lake Dr 17-92 Intersection improvment/ Lake Concord construction. Site work, Driveway and curb and gutter replacement. Excavation, ADA ramp and sidewalk base and milling. Paving and installation for various drainage systems. Storm water drainage work, Fountain system installation. Pond Grading, Erosion Control, Drainage pipe and inlet construction, Inlet, City of Casselberry, Randal Stagg, rstagg@drmp.com, (407)912-0259

Have you ever failed to complete work awarded to you? If so, where and why?
NO

4. Name three (3) municipalities for which you have performed similar work and contact person:

City of Cassellberry Mr.Randy Stagg (407)912-0259 / RStagg@drmp.com
City of Ocoee Mr. Steve Krug (407)905-3170 / skrug@ci.ocoee.fl.us
Osceola County Mr. Rene Laporte (321)284-6889 / Rene.Laporte@OSCEOLA.ORG

5. Have you personally inspected the site of the proposed Work? Describe any anticipated problems with the site and your proposed solutions?
Yes, site visit was conducted. have not observed any conflict in detail of yet.

6. Will you Subcontract any part of this Work? If so, describe which portions and the percentage of the project:
Yes, Paving and MOT (maintenance of the Traffic) will subcontracted. up to 28%.

7. What equipment do you plan on using to complete the Work?
Excavator, Bob cats, Dump truck, Asphalt equipment, Milling machines, grader, compactor, loader, various light tools and hand tools. De-watering equipment. Tench box.

8. State the true and exact, correct, and complete name under which you do business.

Bidder is: American Persian Engineering and Construction LLC DBA APEC LLC

SECTION 00301-A

SUBCONTRACTOR & SUPPLIER LIST

Will your firm be doing all the Work with your own forces? Yes_✓_ No____ (Check yes only if no subcontracting opportunities exist. If you will be doing portions of the Work with your own forces, list these areas and approximate dollar amount allocated for this Work. List suppliers).

List all proposed subcontractors and suppliers to be used to include company names, contractor license number, contact, addresses, phone numbers, type of work subcontracted (trade/commodity), and dollar amount of work. Provide all information requested. Use additional sheets if necessary.

Submit Update Subcontractor/Supplier List with each progress payment requested. Submit Final Subcontractor/Supplier List with Final Payment Request.

	COMPANY NAME, CONTACT ADDRESS, PHONE NUMBER	WORK TO BE PERFORMED (TRADE) OR COMMODITY TO BE SUPPLIED	ESTIMATED DOLLAR AMOUNT
1	GERMAN DELAWARE INCORPORATED German Hernandez 5022 POLARIS ST ORLANDO, FL 32819 (321)229-6223	Trucking, Excavation, underground work.	$875,000
2	FLASH-RITE, INC. 115 ATLANTIC DR MAITLAND, FL 32751	Maintenance of Traffic, sign and barricades	$105,000
3	Argos Material Company 2858 Sidney Avenue Orlando, FL 32810 Kevin Gross (407)388-5462	ready Mix concrete	$135,000
4	SOD Depot 4929 N Orange Blossom Trl, Orlando, FL 32810 (407)875-1900	SOD	$25,000
5	Hubbard Paving 8520 Florida Rock Rd, Orlando, FL 32824 (407)855-2154	Asphalt supplies	$45,000
6	Ferguson Water Works 801 Thorpe Rd, Orlando, FL 32824 (407)859-7473	pipe and other gate valve supplies	$145,000
7	County Materials Corporation 25750 County Rd 561, Astatula, FL 34705 (352)343-8488	Concrete pipe and other RCP related Items	$85,000

END OF SECTION

SECTION 00302

COMPLIANCE WITH FLORIDA TRENCH SAFETY ACT (90-96, LAWS OF FLORIDA)

Bidder hereby acknowledges that all costs for complying with the Florida Trench Safety Act are included in the various items of the bid and in the Lump Sum Total Bid Price shown in Section 00300 - Bid Form, "Schedule of Bid Items". For informational purposes only, the bidder is required to further identify these costs in the summary below.

	Trench Safety Measure (Description)	Unit of Measure (LF, SY)	Unit (Quantity)	Unit Cost	Extended Cost
A	Trench Box	LF	100	$ $30	$ $3,000
B				$	$
C				$	$
D				$	$
				TOTAL	$

BIDDER: American Persian Engineering and Construction LLC DBA APEC LLC

SIGNED: _____

BY: Arman Pourmirza
(Print or type name)

TITLE: Vice President

DATE: 12/04/2023

THIS IS NOT A PAY ITEM: The purpose of this form is to gather information on the costs associated with trench safety measures and to insure that the Bidder has considered these costs and included them in the Lump Sum Total Bid price. Contractor will not receive additional payment if actual quantities differ from those estimated or if the Contractor uses a safety measure different than those listed.

(Failure to Complete This Form May Result in the Bid Being Declared Non-Responsive.)

END OF SECTION

SECTION 00303

DRUG-FREE WORKPLACE CERTIFICATION

IDENTICAL TIE BIDS: Preference shall be given to businesses with drug-free workplace programs. Whenever two or more bids which are equal with respect to price, quantity, and service are received by the State or by any political subdivision for the procurement of commodities or contractual services, a bid received from a business that certifies that it has implemented a drug-free workplace program shall be given preference in the award process. Established procedures for processing tie bids will be followed if none of the tied vendors have a drug-free workplace program (Florida Statutes Section 287.037). In order to have a drug-free workplace program, a business shall:

1. Publish a statement notifying employees that the unlawful manufacture, distribution, dispensing, possession, or use of a controlled substance is prohibited in the workplace and specifying the actions that will be taken against employees for violations of such prohibition.

2. Inform employees about the dangers of drug abuse in the workplace, the business's policy of maintaining a drug-free workplace, and available drug counseling, rehabilitation, and employee assistance programs, and the penalties that may be imposed upon employees for drug abuse violations.

3. Give each employee engaged in providing the commodities or contractual services that are under bid a copy of the statement specified in subsection (1).

4. In the statement specified in subsection (1), notify the employees that, as a condition of working on the commodities or contractual services that are under bid, the employee will abide by the terms of the statement and will notify the employer of any conviction of, or pleas of guilty or *nolo contendere* to, any violation of Chapter 893 or of any controlled substance law of the United States or any state, for a violation occurring in the workplace no later than five (5) days after such conviction.

5. Impose a sanction on, or require the satisfactory participation in a drug abuse assistance or rehabilitation program is such is available in the employee's community, by any employee who is so convicted.

6. Make a good faith effort to continue to maintain a drug-free workplace through implementation of this section.

As the person authorized to sign the statement, I certify that this firm complies fully with the above requirements.

Bidder: American Persian Engineering and Construction LLC DBA APEC LLC

Signed: _____

By: Arman Pourmirza
(Print or Type Name)

Title: Vice President

Date: 12/04/2023

END OF SECTION

SECTION 00310

CONTRACTOR E-VERIFY AFFIDAVIT

I hereby certify that American Persian Engineering and Construction LLC DBA APEC LLC [contractor] does not employ, contract with, or subcontract with an unauthorized alien, and is otherwise in full compliance with Section 448.095, Florida Statutes.

All employees hired on or after January 1, 2021 have had their work authorization status verified through the E-Verify system.

A true and correct copy of American Persian Engineering and Construction LLC DBA APEC LLC [contractor] proof of registration in the E-Verify system is attached to this Affidavit.

Print Name: Arman Pourmirza Vice President

Date: 12/04/2023

STATE OF Florida

COUNTY OF Orange

The foregoing instrument was acknowledged before me by means of ☑physical presence or ☐online notarization, this Dec 4, 2023 (date) by Arman Pourmirza (name of officer or agent, title of officer or agent) of Vice President (name of contractor company acknowledging), a APEC (state or place of incorporation) corporation, on behalf of the corporation. He/she is personally known to me or has produced Drivers License (type of identification) as identification.

[Notary Seal]

Notary Public

KATHIE RODRIGUEZ
Notary Public
State of Florida
Comm# HH366367
Expires 2/26/2027

Kathie Rodriguez

Name typed, printed or stamped

My Commission Expires: 2/26/2027

An official website of the United States government
Here's how you know

E-Verify Menu

My Company Account

My Company Profile

Company Information

Company Name

American Persian Engineering and Construction LLC

Doing Business As (DBA) Name

APEC

Company ID

1744887

Enrollment Date

Oct 05, 2021

Employer Identification Number (EIN)

272469029

Unique Entity Identifier (UEI)

DUNS Number

Total Number of Employees

1 to 4

NAICS Code

237

Sector

Construction

Subsector

Heavy and Civil Engineering Construction

Edit Company Information

Employer Category

Employer Category

Local Government

Edit Employer Category

Company Addresses

Physical Address

5401 S kirkman Road,
336
Orlando, FL 32819

Mailing Address

Same as Physical Address

Edit Company Addresses

E-Verify Employment Eligibility Verification Tutorial

Knowledge Test Results

Congratulations!

majid Fouladi ([redacted] your score is [redacted]

majid Fouladi, you successfully completed this tutorial and passed the E-Verify Knowledge Test on October 05, 2021.

Use your browser's print capability to obtain a copy of this page for your records.

To use E-Verify, select 'Exit Tutorial.'

E-Verify

REMINDER: You must visit 'View Essential Resources' to read the E-Verify User Manual, and you must print and clearly display the 'Notice of E-Verify Participation' and 'Right to Work' posters in all languages supplied by DHS.

SECTION 00410
BID BOND

Bidder shall provide the City with a Bid Bond in the amount of five percent (5%) of the contract bid.

KNOW ALL MEN BY THESE PRESENTS, that we, the undersigned, American Persian Engineering & Construction LLC DBA APEC LLC, as Principal, and The Gray Insurance Company _____ as Surety, are hereby held and firmly bound unto the City of Ocoee, Florida, as Owner, in the penal sum of, (5 percent of the Contract Bid) $_____

Five Percent of the total amount bid (5%)

(written amount in dollars and cents)

for the payment of which, well and truly to be made, we hereby jointly and severally bind ourselves, successors and assigns.

Signed this 05 day of December, 2023. The Condition of the above obligation is such that whereas the Principal has submitted to the City of Ocoee, Florida a certain Bid, attached hereto and hereby made a part hereof to enter into a contract in writing, for the Project: "ITB #24-002 W. Oakland Ave Reconstruction."

NOW THEREFORE

1. Bidder and Surety, jointly and severally, bind themselves, their heirs, executors, administrators, successors and assigns to pay to Owner upon default of Bidder any damages, costs, or expenses, including attorney's fees, incurred by Owner that are proximately caused by such default. In no event shall Bidder's and Surety's obligation hereunder exceed the penal sum set forth on the face of this Bond.

2. Default of Bidder shall occur upon the failure of Bidder to deliver within the time required by the Bidding Documents (or any extension thereof agreed to in writing by Owner) the executed Agreement required by the Bidding Documents and any performance and payment bonds required by the Bidding Documents and Contract Documents.

3. This obligation shall be null and void if:

   3.1 Owner accepts Bidder's bid and Bidder delivers within the time required by the Bidding Documents (or any extension thereof agreed to in writing by Owner) the executed Agreement required by the Bidding Documents and any performance and payment bonds required by the Bidding Documents and Contract Documents, or

   3.2 All bids are rejected by Owner, or

   3.3 Owner fails to issue a Notice of Intent to Award to Bidder within ninety (90) days from the time and date fixed for the opening of Bids (or any extension thereof agreed to in writing by Bidder and, if applicable, consented to by Surety when required by paragraph 5 hereof).

4. Payment under this Bond will be due and payable upon default by Bidder and within 30 calendar days after receipt by Bidder and Surety of written notice of default from Owner, which notice will be given with reasonable promptness, identifying this Bond and the Project and including a statement of the amount due.

5. Surety waives notice of and any and all defenses based on or arising out of any time extension to issue notice of award agreed to in writing by Owner and Bidder, provided that the total time for issuing notice of award including extensions shall not in the aggregate exceed 120 days from Bid Due Date without Surety's written consent.

6. No suit or action shall be commenced under this bond prior to 30 calendar days after the notice of default required in paragraph 4 above is received by Bidder and Surety and in no case later than one year after Bid Due Date.

7. Any suit or action under this Bond shall be commenced only in a court of competent jurisdiction located in the state in which the Project is located.

8. Notices required hereunder shall be in writing and sent to Bidder and Surety at their respective addresses shown on the face of this Bond. Such notices may be sent by personal delivery, commercial courier or by United States Registered or Certified Mail, return receipt requested, postage pre-paid, and shall be deemed to be effective upon receipt by the party concerned.

9. Surety shall cause to be attached to this Bond, a current and effective Power of Attorney evidencing the authority of the officer, agent or representative who executed this Bond on behalf of Surety to execute, seal and deliver such Bond and bind the Surety thereby.

10. This Bond is intended to conform to all applicable statutory requirements. Any applicable requirement of any applicable statute that has been omitted from this Bond shall be deemed to be included herein as if set forth at length. If any provision of this Bond conflicts with any applicable provision of any applicable statute, then the provision of said statute shall govern and the remainder of this Bond that is not in conflict therewith shall continue in full force and effect.

11. The term "bid" as used herein includes a bid, offer, or proposal as applicable.

IN WITNESS WHEREOF, the Principal and the Surety have hereunto set their hands and seals, and such of them as are corporations have caused their corporate seals to be hereto affixed and these presents to be signed by their proper officers, the day and year first set forth above.

BIDDER:	Strike out (X) non-applicable signature blocks and complete applicable block. All signatures must have their names printed or type below their signature.

If Bidder is **SOLE PROPRIETORSHIP**, complete this signature block.	
X _____ (Individual's Signature)	(1) X _____ (Witness)
X _____ (Individual's Signature)	(2) X _____ (Witness)
doing business as _____	**(SEAL)**
_____ (Business Address)	
_____ (Telephone No.) _____ (Florida License No.)	

If Bidder is **PARTNERSHIP**, complete this signature block.	
X (Partnership Name)	(1) X (Witness)
X (General Partner's Signature)	(2) X (Witness)
X (General Partner's Name)	**(SEAL)**
(Business Address)	
(Telephone No.) (Florida License No.)	

If Bidder is **CORPORATION,** complete this signature block.	
American Persian Engineering & Construction LLC DBA APEC LLC (Corporation Name)	(1) _____ (Witness)
Florida (State of Incorporation)	(2) _____ (Witness)
By: Arman Pourmirza. (Name of Person Authorized to Sign - See Note 1)	**(SEAL)**
Vice president (Title)	
_____ (Authorized Signature)	
_____ (Corporation President)	
5401 S Kirkman Road, Suite 336 Orlando, FL 32819 (Business Address)	
(407) 619-7888 (Telephone No.) (Florida License No.)	

SURETY

The Gray Insurance Company (Surety Business Name)	Witness: (If agency is not a Corporation) (1) X (Witness)
P.O. BOX 6202, METAIRIE, LA 70009 - 6202 (Principal Place of Business)	(2) X (Witness)
By: (Surety Agent's Signature - See Note 2)	Attest: (If Agency is a Corporation)
Kevin Wojtowicz (Surety Agent's Name)	(Corporate Secretary Signature)
Attorney-In-Fact and Licensed FL Resident Agent (Surety Agent's Title)	Stephanie Wall (Corporate Secretary Name) Witness to Surety
Nielson, Wojtowicz, Neu & Associates (Business Name of Local Agent for Surety)	(Corporate Seal)
1000 Central Ave, Sutie 200 St. Petersburg, FL 33705 (Business Address)	
727- 209-1803 (Telephone No.) NA (Bond No.)	

NOTES:

(1) Complete and attach "Corporate Authority to Execute Documents" if executed by any corporate employee other than president or vice-president.

(2) Complete and attach a certified copy of "Power-of-Attorney" prepared by Surety appointing individual "Attorney-in-Fact" for execution of Bid Bond on behalf of Surety and corresponding notarized "Attorney-in-Fact".

(3) Above addresses are to be used for giving required notice.

(4) Any singular reference to Bidder, Surety, Owner or other party shall be considered plural where applicable.

(5) Surety companies executing bonds must appear on the Treasury Department's most current list (Circular 570 as amended) and be authorized to transact business in the state where the project is located.

THE GRAY INSURANCE COMPANY
THE GRAY CASUALTY & SURETY COMPANY

GENERAL POWER OF ATTORNEY

Bond Number: NA **Principal:** American Persian Engineering & Construction LLC DBA APEC LLC

Project: ITB 24-002 W. Oakland Avenue Reconstruction

KNOW ALL BY THESE PRESENTS, THAT The Gray Insurance Company and The Gray Casualty & Surety Company, corporations duly organized and existing under the laws of Louisiana, and having their principal offices in Metairie, Louisiana, do hereby make, constitute, and appoint: **Kevin Wojtowicz, Jessica Reno, Edwin T. Collins, IV, Devin Phillips, Christian Collins, and Laura D. Mosholder of St. Petersburg, Florida jointly and severally** on behalf of each of the Companies named above its true and lawful Attorney(s)-in-Fact, to make, execute, seal and deliver, for and on its behalf and as its deed, bonds, or other writings obligatory in the nature of a bond, as surety, contracts of suretyship as are or may be required or permitted by law, regulation, contract or otherwise, provided that no bond or undertaking or contract of suretyship executed under this authority shall exceed the amount of
$25,000,000.00.

This Power of Attorney is granted and is signed by facsimile under and by the authority of the following Resolutions adopted by the Boards of Directors of both The Gray Insurance Company and The Gray Casualty & Surety Company at meetings duly called and held on the 26th day of June, 2003.

"RESOLVED, that the President, Executive Vice President, any Vice President, or the Secretary be and each or any of them hereby is authorized to execute a power of Attorney qualifying the attorney named in the given Power of Attorney to execute on behalf of the Company bonds, undertakings, and all contracts of surety, and that each or any of them is hereby authorized to attest to the execution of such Power of Attorney, and to attach the seal of the Company; and it is

FURTHER RESOLVED, that the signature of such officers and the seal of the Company may be affixed to any such Power of Attorney or to any certificate relating thereto by facsimile, and any such Power of Attorney or certificate bearing such facsimile signature or facsimile seal shall be binding upon the Company now and in the future when so affixed with regard to any bond, undertaking or contract of surety to which it is attached.

IN WITNESS WHEREOF, The Gray Insurance Company and The Gray Casualty & Surety Company have caused their official seals to be hereinto affixed, and these presents to be signed by their authorized officers this 4th day of November, 2022.

THE GRAY INSURANCE COMPANY SEAL

By: Michael T. Gray
President
The Gray Insurance Company

Cullen S. Piske
President
The Gray Casualty & Surety Company

THE GRAY CASUALTY & SURETY COMPANY SEAL

State of Louisiana
ss:
Parish of Jefferson

On this 4th day of November, 2022, before me, a Notary Public, personally appeared Michael T. Gray, President of The Gray Insurance Company, and Cullen S. Piske, President of The Gray Casualty & Surety Company, personally known to me, being duly sworn, acknowledged that they signed the above Power of Attorney and affixed the seals of the companies as officers of, and acknowledged said instrument to be the voluntary act and deed, of their companies.

Leigh Anne Henican
Notary Public
Notary ID No. 92653
Orleans Parish, Louisiana

Leigh Anne Henican
Notary Public, Parish of Orleans State of Louisiana
My Commission is for Life

I, Mark S. Manguno, Secretary of The Gray Insurance Company, do hereby certify that the above and forgoing is a true and correct copy of a Power of Attorney given by the companies, which is still in full force and effect. IN WITNESS WHEREOF, I have set my hand and affixed the seals of the Company this 05 day of December , 2023 .

I, Leigh Anne Henican, Secretary of The Gray Casualty & Surety Company , do hereby certify that the above and forgoing is a true and correct copy of a Power of Attorney given by the companies, which is still in full force and effect. IN WITNESS WHEREOF, I have set my hand and affixed the seals of the Company this 05 day of December , 2023 .

THE GRAY INSURANCE COMPANY SEAL

THE GRAY CASUALTY & SURETY COMPANY SEAL

ATTORNEY-IN-FACT AFFIDAVIT

STATE OR COMMONWEALTH OF Florida)

COUNTY OR CITY OF Pinellas)

Before me, a Notary Public, personally came Kevin Wojtowicz known to me, and known to be the Attorney-in-Fact of The Gray Insurance Company, a Louisiana Corporation, which (Surety Company) (State)

executed the attached bond as surety, who deposed and said that his signature and the corporate seal of said

The Gray Insurance Company were affixed by order and authority of said Company's Board of Directors, (Surety Company)

and that the execution of the attached bond is the free act and deed of The Gray Insurance Company. (Surety Company)

Given under my hand and seal this 05 day of December, 2023

MARGARITA LAZARIDES
NOTARY PUBLIC
STATE OF FLORIDA
NO. HH134133
MY COMMISSION EXPIRES JUL. 01, 2025

Margarita Lazarides
(Notary Public)

My Commission Expires 07/01/2025.

END OF SECTION

SECTION 00480

NON-COLLUSION AFFIDAVIT

STATE OF Florida)

COUNTY OF Orange)

Arman Pourmirza, being first duly swore deposes and says:

1. He (it) is the Vice President (Owner, Partner, Office, Representative or Agent) of APEC LLC, the Bidder that has submitted the attached Bid;

2. He is fully informed respecting the preparation and contents of the attached Bid and of all pertinent circumstances respecting such Bid;

3. Such Bid is genuine and is not a collusive or sham Bid;

4. Neither the said Bidder nor any of its officers, partners, owners, agents, representatives, employees, or parties in interest, including this affidavit, have in any way, colluded, conspired, connived or agreed, directly or indirectly, with any other Bidder, firm or person to submit a collusive or sham Bid in connection with the Contract for which the attached Bid has been submitted; or to refrains from bidding in connection with such Contract; or have in any manner, directly or indirectly, sought by agreement or collusion, or communication, or conference with any Bidder, firm, or person to fix the price or prices in the attached Bid or of any other Bidder, or to fix any overhead, profit, or cost elements of the Bid price or the Bid price in any other Bidder, or to secure through any collusion, conspiracy, connivance, or unlawful agreement any advantage against (Recipient), or any person interested in the proposed Contract;

5. The price or prices quoted in the attached Bid are fair and proper and are not tainted by any collusion, conspiracy, connivance, or unlawful agreement on the part of the Bidder or any other of its agents, representatives, owners, employees or parties in interest, including this affidavit.

By: _____

Title: V.P.

Sworn to (or affirmed) and subscribed before me by means of ☑ physical presence or ☐ online notarization, this 4 day of December, 20 , by Arman Paurmiza in the state of Florida County of Orange.

Notary Public

My Commission Expires: 2/26/~~2027~~ 2027 KR

KATHIE RODRIGUEZ
Notary Public
State of Florida
Comm# HH366367
Expires 2/26/2027

END OF SECTION

ITB#24-002 BID CONFLICT OF INTEREST DISCLOSURE FORM

The award of this contract is subject to the provisions of Chapter 112, Florida Statutes. All Bidders must disclose within their Bid: the name of any City of Ocoee employee, Mayor or City Commissioner, other City Official, or City Consultants, who owns assets or capital stock, directly or indirectly, in the Bidder's firm or any of its branches, or would directly or indirectly benefit by the profits or emoluments of this Bid. (Indirect ownership or benefit applies to any members of his or her immediate family.) Bidder certifies that no member of the entity's ownership or management is presently applying for an employee position or actively seeking an elected position with the City. In the event that a conflict of interest is identified in the provision of services, Bidder agrees to immediately notify the City in writing.

The purpose of this disclosure form is to give the City the information needed to identify potential conflicts of interest for the City Commission, Staff, and other key City employees and consultants involved in the award and administration of this contract.

According to Chapter 112, Florida Statutes, the term "conflict of interest" "means a situation in which regard for a private interest tends to lead to disregard of a public duty or interest", and refers to situations in which financial or other personal considerations may adversely affect, or have the appearance of adversely affecting, an employee's professional judgment in exercising any City duty or responsibility in administration, management, instruction, research, or other professional activities.

Please check one of the following statements and attach additional documentation if necessary:

✓ To the best of our knowledge, the undersigned firm has no potential conflict of interest for this Bid.

_____ The undersigned firm, by attachment to this form, submits information which may be a potential conflict of interest for this Bid.

Acknowledged by:

American Persian Engineering and Construction LLC DBA APEC LLC

Firm Name

Signature

Arman Pourmirza Vice President

Name and Title (Print or Type)

12/04/2023

Date

SECTION 00481
CERTIFICATION OF NONSEGREGATED FACILITIES

The Bidder certifies that he does not maintain or provide for his employees any segregated facilities at any of his establishments, and that he does not permit his employees to perform their services at any location, under this control, where segregated facilities are maintained. The Bidder certifies further that he will not maintain or provide for his employees any segregated facilities at any of his establishments, and that he will not permit his employees to perform their services at any location under his control where segregated facilities are maintained. The Bidder agrees that a breach of this certification will be a violation of the Equal Opportunity clause in any contract resulting from acceptance of this Bid. As used in this certification, the term "segregated facilities" means any waiting rooms, work areas, restrooms and washrooms, restaurants and other eating areas, time clocks, locker rooms and other storage and dressing areas, parking lots, drinking fountains, recreation or entertainment area, transportation, and housing facilities provided for employees on the basis of race, color, religion, or national origin, because of habit, local custom, or otherwise. The Bidder agrees that (except where he has obtained identical certification from proposed subcontractors for specific time periods) he will obtain identical certifications from proposed subcontractors prior to the award of subcontracts exceeding $10,000 which are not exempt from the provisions of the Equal Opportunity clause, and that he will retain such certifications in his files.
The nondiscriminatory guidelines as promulgated in Section 202, Executive Order 11246, and as amended by Executive Order 11375 and as amended, relative to Equal Opportunity for all persons and implementations of rules and regulations prescribed by the United States Secretary of Labor are incorporated herein.

Note:

The penalty for making false statements in offers is prescribed in 18 U.S.C. 1001.

Date 12/04, 2023.

By: Arman Pourmirza

Vice President
(Title)

Official Address (including Zip Code):

5401 s. Kirkman Rd #336,
Orlando, Fl 32819
(407)928-6811 Allaccess@apec2.com

ATTACH AND INCLUDE AS PART OF PROPOSAL FORM; FAILURE TO DO SO MAY BE CAUSE FOR DISQUALIFICATION OF YOUR BID.

END OF SECTION

SECTION 00482
(Page 1 of 2)

SWORN STATEMENT UNDER SECTION 287.133(3)(a), FLORIDA STATUTES, ON PUBLIC ENTITY CRIMES

THIS FORM MUST BE SIGNED IN THE PRESENCE OF A NOTARY PUBLIC OR OTHER OFFICER AUTHORIZED TO ADMINISTER OATHS.

1. This sworn statement is submitted to City of Ocoee, Florida by APEC LLC by

Arman Pourmirza Vice President of APEC LLC.
(Print individual's Name & Title)

whose business address is 5401 s. Kirkman Rd #336, Orlando, Fl 32819

(407)928-6811 Allaccess@apec2.com

2. I understand that a "public entity crime" as defined in Paragraph 287.133(1)(g), Florida Statutes, means a violation of any state or federal law by a person with respect to and directly related to the transaction of business with any public entity or with an agency or political subdivision of any other state or with the United States, including, but not limited to, any bid or contract for goods or services to be provided to any public entity or an agency or political subdivision of any other state or of the United States and involving antitrust, fraud, theft, bribery, collusion, racketeering, conspiracy, or material representation.

3. I understand that "convicted" or "conviction" as defined in Paragraph 287.133(1)(b), Florida Statutes, means a finding of guilt or a conviction of a public entity crime, with or without an adjudication of guilt, in any federal or state trial court of record relating to charges brought by indictment or information after July 1, 1989, as a result of a jury verdict, non-jury trial, or entry of a plea of guilty or nolo contendere.

4. I understand that an "affiliate" as defined in Paragraph 287.133(1)(a), Florida Statutes, means:

   a. A predecessor or successor of a person convicted of a public entity crime: or

   b. An entity under the control of any natural person who is active in the management of the entity and who has been convicted of a public entity crime. The term "affiliate" includes those officers, directors, executives, partners, shareholders, employees, members, and agents who are active in the management of an affiliate. The ownership by one person of shares constituting a controlling interest in another person, or a pooling of equipment or income among persons when not for fair market value under an arm's length agreement, shall be a *prima facie* case that one person controls another person. A person who knowingly enters into a joint venture with a person who has been convicted of a public entity crime in Florida during the preceding 36 months shall be considered an affiliate.

5. I understand that a "person" as defined in Paragraph 287.133(1)(e), Florida Statutes, means any natural person or entity organized under the laws of any state or of the United States with the legal power to enter into a binding contract and which bids or applies to bid on contracts for the provision of goods or services let by a public entity, or which otherwise transacts or applies to transact business with a public entity. The term "person" includes those officers, directors, executives, partners, shareholders, employees, members, and agents who are active in management of an entity.

6. Based on information and belief, the statement I have marked below is true in relation to the entity submitting this sworn statement. (please indicate which statement applies).

___✓___ Neither the entity submitting this sworn statement, or one or more of its officers, directors, executives, partners, shareholders, employees, members, or agents who are active in management of the entity, nor any affiliate of the entity have been charged with and convicted of a public entity crime subsequent to July 1, 1989.

_____ The entity submitting this sworn statement, or one or more of the officers, directors, executives, partners, shareholders, employees, members, or agents who are active in management of the entity, or an affiliate of this entity has been charged with and convicted of a public entity crime subsequent to July 1, 1989.

_____ The entity submitting this sworn statement, or one or more of the officers, directors, executives, partners, shareholders, employees, members, or agents who are active in management of the entity, or an affiliate of this entity has been charged with and convicted of a public entity crime subsequent to July 1, 1989. However, there has been a subsequent proceeding concerning the conviction before a Hearing Officer of the State of Florida, Division of Administrative Hearings. The final order entered by the Hearing Officer determined that it was not in the public interest to place the entity submitting this sworn statement on the convicted vendor list. (Please attach a copy of the final order.)

I UNDERSTAND THAT THE SUBMISSION OF THIS FORM TO THE CONTRACTING OFFICER FOR THE PUBLIC ENTITY IDENTIFIED IN PARAGRAPH 1 (ONE) ABOVE IS FOR THAT PUBLIC ENTITY ONLY AND, THAT THIS FORM IS VALID THROUGH _____. I ALSO UNDERSTAND THAT I AM REQUIRED TO INFORM THE PUBLIC ENTITY PRIOR TO ENTERING INTO A CONTRACT IN EXCESS OF THE THRESHOLD AMOUNT PROVIDED IN SECTION 287.017, FLORIDA STATUTES FOR CATEGORY TWO OF CHANGE IN THE INFORMATION CONTAINED IN THIS FORM.

_____
(Signature)

Date: 12/04/23

APEC LLC.
Name of Bidder (Contractor)

STATE OF Florida

COUNTY OF Orange

Sworn to (or affirmed) and subscribed before me by means of ☑ physical presence or ☐ online notarization, this 4 day of December, 2023, by Armon Pourmiza in the state of Florida County of Orange.

KATHIE RODRIGUEZ
Notary Public
State of Florida
Comm# HH366367
Expires 2/26/2027

Notary Public

My Commission Expires: 2/26/2027

END OF SECTION

SECTION 00483
CERTIFICATION OF NONDISCRIMINATORY LABOR PRACTICES

This certification relates to a construction contract proposed by the City of Ocoee

Equal Opportunity Employment: The Contractor shall not discriminate on the basis of race, color, national origin, gender, age, handicapped status, veteran status, and/or religion in performing the work governed by this contract. The City is an Equal Opportunity Employer (EOE) and as such encourages all contractors to comply with EOE regulations. Any subcontract the Contractor may enter into shall include this clause with the same degree of application being encouraged.

I am the undersigned prospective construction contractor or subcontractor. I certify that:

(1) I Arman Pourmirza (have) _____ have not participated in a previous contract or subcontract subject to the Equal Opportunity Clause and

(2) if I have participated in a previous contract or subcontract subject to the Equal Opportunity Clause, I Arman Pourmirza (have) _____ have not filed with the Joint Reporting Committee, the Director of the Office of Federal Contract Compliance Programs, or the Equal Employment Opportunity Commission all reports due under the applicable filing requirements.

I understand that, if I have participated in a previous contract or subcontract subject to the Equal Opportunity Clause and have failed to file all reports due under the applicable filing requirements, I am not eligible, and will not be eligible, to have my bid or offer considered, or to enter into the proposed contract or subcontract, unless and until I make an arrangement regarding such reports that is satisfactory to the office where the reports are required to be filed.

I agree that I will obtain identical certifications from prospective lower-tier sub-contractors when I receive bids or offers or initiate negotiations for any lower-tier construction subcontracts with a price exceeding $10,000. I also agree that I will retain such certifications in my files.

Date Dec, 4th, 2023. By: _____
(Signature of Authorized Official)

Arman Pourmirza Vice President of APEC LLC
(Name of Prospective Construction Contractor or Subcontractor)

5401 s. Kirkman Rd #336, Orlando, Fl 32819
(Address of Prospective Construction Contractor or Subcontractor)

(407)928-6811 27-2469029
(Telephone Number) (Employer Identification Number)

END OF SECTION

Certification Regarding Scrutinized Companies' Lists

The Respondent certifies that the company is not participating in a boycott of Israel. The Respondent certifies that the Respondent is not on the Scrutinized Companies that Boycott Israel List, not on the Scrutinized Companies with Activities in Sudan List, not on the Scrutinized Companies with activities in the Iran Petroleum Energy Sector List, or has been engaged in business operations in Cuba or Syria, as those terms are used and defined in sections 287.135 and 215.473 of the Florida Statutes. In the event that the Respondent is unable to provide such certification but still seeks to be considered for award of this solicitation, the Respondent shall, on a separate piece of paper, clearly state that it is on one or both of the Scrutinized Companies lists and shall furnish together with its proposal a duly executed written explanation of the facts supporting any exception to the requirement for certification that it claims under Section 287.135 of the Florida Statutes. The Respondent agrees to cooperate fully with the City in any investigation undertaken by the City to determine whether the claimed exception would be applicable. The City shall have the right to terminate any contract resulting from this solicitation for default if the Respondent is found to have submitted a false certification, or to have been placed on the Scrutinized Companies that Boycott Israel List, or to have been placed on the Scrutinized Companies for Activities in Sudan List, or the Scrutinized Companies with Activities in the Iran Petroleum Energy Sector List, or has been engaged in business operations in Cuba or Syria.

Name of Respondent: AMERICAN PERSIAN ENGINEERING AND CONSTRUCTION LLC DBA APEC LLC

By: _____
(Authorized Signature)

Title: Arman Pourmirza Vice President of APEC LLC

Date: 12/04/2023

Ron DeSantis, Governor

Melanie S. Griffin, Secretary

STATE OF FLORIDA
DEPARTMENT OF BUSINESS AND PROFESSIONAL REGULATION

CONSTRUCTION INDUSTRY LICENSING BOARD

THE GENERAL CONTRACTOR HEREIN IS CERTIFIED UNDER THE
PROVISIONS OF CHAPTER 489, FLORIDA STATUTES

FOULADI, MAJID

AMERICAN PERSIAN ENGINEERING & CONSTRUCTION LLC
5401 S KIRKMAN RD
SUITE 336
ORLANDO FL 32819

LICENSE NUMBER: CGC060385

EXPIRATION DATE: AUGUST 31, 2024

Always verify licenses online at MyFloridaLicense.com

Do not alter this document in any form.

This is your license. It is unlawful for anyone other than the licensee to use this document.

AMERPER-01 HARTHUR

CERTIFICATE OF LIABILITY INSURANCE

DATE (MM/DD/YYYY) 8/14/2023

THIS CERTIFICATE IS ISSUED AS A MATTER OF INFORMATION ONLY AND CONFERS NO RIGHTS UPON THE CERTIFICATE HOLDER. THIS CERTIFICATE DOES NOT AFFIRMATIVELY OR NEGATIVELY AMEND, EXTEND OR ALTER THE COVERAGE AFFORDED BY THE POLICIES BELOW. THIS CERTIFICATE OF INSURANCE DOES NOT CONSTITUTE A CONTRACT BETWEEN THE ISSUING INSURER(S), AUTHORIZED REPRESENTATIVE OR PRODUCER, AND THE CERTIFICATE HOLDER.

IMPORTANT: If the certificate holder is an ADDITIONAL INSURED, the policy(ies) must have ADDITIONAL INSURED provisions or be endorsed. If SUBROGATION IS WAIVED, subject to the terms and conditions of the policy, certain policies may require an endorsement. A statement on this certificate does not confer rights to the certificate holder in lieu of such endorsement(s).

PRODUCER
Jean Arthur Associates, Inc.
5626 Red Bug Lake Road
Winter Springs, FL 32708

CONTACT NAME:
PHONE (A/C, No, Ext): (407) 699-9930 FAX (A/C, No): (407) 699-5626
E-MAIL ADDRESS:

INSURER(S) AFFORDING COVERAGE	NAIC #
INSURER A : Ohio Security Insurance Company	24082
INSURER B : The Ohio Casualty Insurance Company	24074
INSURER C : Ace American Insurance Company	22667
INSURER D :	
INSURER E :	
INSURER F :	

INSURED
AMERICAN PERSIAN ENGINEERING AND CONSTRUCTION LLC
5401 S Kirkman Rd Ste #336
Orlando, FL 32819

COVERAGES CERTIFICATE NUMBER: REVISION NUMBER:

THIS IS TO CERTIFY THAT THE POLICIES OF INSURANCE LISTED BELOW HAVE BEEN ISSUED TO THE INSURED NAMED ABOVE FOR THE POLICY PERIOD INDICATED. NOTWITHSTANDING ANY REQUIREMENT, TERM OR CONDITION OF ANY CONTRACT OR OTHER DOCUMENT WITH RESPECT TO WHICH THIS CERTIFICATE MAY BE ISSUED OR MAY PERTAIN, THE INSURANCE AFFORDED BY THE POLICIES DESCRIBED HEREIN IS SUBJECT TO ALL THE TERMS, EXCLUSIONS AND CONDITIONS OF SUCH POLICIES. LIMITS SHOWN MAY HAVE BEEN REDUCED BY PAID CLAIMS.

INSR LTR	TYPE OF INSURANCE	ADDL INSD	SUBR WVD	POLICY NUMBER	POLICY EFF (MM/DD/YYYY)	POLICY EXP (MM/DD/YYYY)	LIMITS	
A	X COMMERCIAL GENERAL LIABILITY CLAIMS-MADE X OCCUR GEN'L AGGREGATE LIMIT APPLIES PER: X POLICY PRO-JECT LOC OTHER:			BLS60986450	2/12/2023	2/12/2024	EACH OCCURRENCE DAMAGE TO RENTED PREMISES (Ea occurrence) MED EXP (Any one person) PERSONAL & ADV INJURY GENERAL AGGREGATE PRODUCTS - COMP/OP AGG	$ 1,000,000 $ 300,000 $ 15,000 $ 1,000,000 $ 2,000,000 $ 2,000,000 $
A	AUTOMOBILE LIABILITY ANY AUTO OWNED AUTOS ONLY SCHEDULED AUTOS X HIRED AUTOS ONLY X NON-OWNED AUTOS ONLY			BAS64076536	2/12/2023	2/12/2024	COMBINED SINGLE LIMIT (Ea accident) BODILY INJURY (Per person) BODILY INJURY (Per accident) PROPERTY DAMAGE (Per accident)	$ 1,000,000 $ $ $ $
B	X UMBRELLA LIAB X OCCUR EXCESS LIAB CLAIMS-MADE DED X RETENTION $ 0			USO60986450	2/12/2023	2/12/2024	EACH OCCURRENCE AGGREGATE Completed Ops	$ 2,000,000 $ 2,000,000 $ 2,000,000
A	WORKERS COMPENSATION AND EMPLOYERS' LIABILITY ANY PROPRIETOR/PARTNER/EXECUTIVE OFFICER/MEMBER EXCLUDED? (Mandatory in NH) Y / N: N If yes, describe under DESCRIPTION OF OPERATIONS below	N / A		XWS64648408	2/12/2023	2/12/2024	X PER STATUTE OTH-ER E.L. EACH ACCIDENT E.L. DISEASE - EA EMPLOYEE E.L. DISEASE - POLICY LIMIT	$ 1,000,000 $ 1,000,000 $ 1,000,000
C	Pollution Liability			G73604989 002	3/17/2023	3/17/2024	General Aggregate	2,000,000
C	Pollution Liability			G73604989 002	3/17/2023	3/17/2024	Each Pollution Cond	1,000,000

DESCRIPTION OF OPERATIONS / LOCATIONS / VEHICLES (ACORD 101, Additional Remarks Schedule, may be attached if more space is required)

CERTIFICATE HOLDER

CANCELLATION

SHOULD ANY OF THE ABOVE DESCRIBED POLICIES BE CANCELLED BEFORE THE EXPIRATION DATE THEREOF, NOTICE WILL BE DELIVERED IN ACCORDANCE WITH THE POLICY PROVISIONS.

AUTHORIZED REPRESENTATIVE
Malinda Torres

© 1988-2015 ACORD CORPORATION. All rights reserved.
The ACORD name and logo are registered marks of ACORD

Florida Department of Transportation

RON DESANTIS
GOVERNOR

605 Suwannee Street
Tallahassee, FL 32399-0450

JARED W. PERDUE, P.E.
SECRETARY

March 10,2023

AMERICAN PERSIAN ENGINEERING AND CONSTRUCTION LLC
5401 S KIRKMAN ROAD,
ORLANDO, FLORIDA 32835

RE: CERTIFICATE OF QUALIFICATION

The Department of Transportation has qualified your company for the type of work indicated below.

FDOT APPROVED WORK CLASSES:
DRAINAGE, GRADING, GRASSING, SEEDING AND SODDING, SIDEWALK, Driveways.

Unless notified otherwise, this Certificate of Qualification will expire **6/30/2024.**

In accordance with Section 337.14(4), Florida Statutes, changes to Ability Factor or Maximum Capacity Rating will not take effect until after the expiration of the current certificate of prequalification (if applicable).

In accordance with Section 337.14(1), Florida Statutes, an application for qualification must be filed within (4) months of the ending date of the applicant's audited annual financial statements.

If the company's maximum capacity has been revised, it may be accessed by logging into the Contractor Prequalification Application System via the following link:
HTTPS://fdotwp1.dot.state.fl.us/ContractorPreQualification

Once logged in, select "View" for the most recently approved application, and then click the "Manage" and "Application Summary" tabs.

The company may apply for a Revised Certificate of Qualification at any time prior to the expiration date of this certificate according to Section 14-22.0041(3), Florida Administrative Code (F.A.C.), by accessing the most recently approved application as shown above and choosing "Update" instead of "View." If certification in additional classes of work is desired, documentation is needed to show that the company has performed such work.

All prequalified contractors are required by Section 14-22.006(3), F.A.C., to certify their work underway monthly in order to adjust maximum bidding capacity to available bidding capacity. You can find the link to this report at the website shown above.

Sincerely,

James E. Taylor II

James E. Taylor II, Prequalification Supervisor
Contracts Administration Office

JTII:cg

WEST OAKLAND AVE RECONSTRUCTION
BID NO ITB 24-002
DECEMBER 5, 2023
2:00 PM

CITY OF OCOEE
1 North Bluford Ave
Ocoee, FL 34761

BIDDER

2544 Connection Point
Oviedo, Fl 32765
321-251-0535
Contact: Shane Cox 321-251-0535
shane@sdcfl.com

SECTION 00300

BID FORM

SUBMITTED: 12/5/2023
(Date)

PROJECT IDENTIFICATION: CITY OF OCOEE BID

ITB #24-002 W. Oakland Ave Reconstruction

NAME OF BIDDER: Southern Development & Construction Inc

BUSINESS ADDRESS: 2544 Connection Point PHONE NO.: 321-251-0535
CITY, STATE, ZIP: Oviedo Florida, 32765

CONTRACTOR'S FEDERAL I.D. NUMBER 59 - 3249904

CONTRACTOR'S FLORIDA LICENSE NO.: See Attached, CBC 060345, CUC 1224501 & FDOT Certification

THIS BID IS SUBMITTED TO: City of Ocoee, Florida (hereinafter called Owner)

1. The undersigned Bidder proposes and agrees, if this Bid is accepted, to enter into an Agreement with Owner in the form included in the Contract Documents to perform and furnish all Work, as specified or indicated in the Contract Documents for the Contract Price and within the Contract Time indicated in this Bid Form and in accordance with the other terms and conditions of the Contract Documents.

2. Bidder accepts all of the terms and conditions of the Bidding Documents, including, without limitation, those dealing with the disposition of Bid Bond. This Bid will remain open for ninety (90) calendar days after the day of Bid opening. Bidder will sign and deliver the required number of counterparts of the Amendment to the Agreement with the Bonds and other documents required by the Bidding Requirements within ten (10) days after the date of Owner's Notice of Intent to Award.

3. In submitting this Bid, Bidder makes all representations required by the Instructions to Bidders and the Agreement and further warrants and represents that:

   a. Bidder has examined copies of all the Bidding Documents and of the following Addenda:

No. 1	Dated 11-9-2023		No.	Dated:	
No. 2	Dated 11-29-2023		No.	Dated:	
No. 3	Dated 11-30-2023		No.	Dated:	
No.	Dated		No.	Dated:	

(Receipt of all which is hereby acknowledged) and also copies of the Invitation for Bids and the Instructions to Bidders.

b. Bidder has familiarized itself with the nature and extent of the Contract Documents, work, site, locality, and all local conditions and laws and regulations that in any manner may affect cost, progress, performance or furnishing the Work.

c. Bidder has carefully studied all reports of explorations and tests of subsurface conditions at or contiguous to the site and all drawings of physical conditions in or relating to existing surface of subsurface structures at or contiguous to the site (except Underground Facilities) which have been identified in the Supplementary Conditions, as provided in paragraph 4.02.1 of the General Conditions. Bidder accepts the determination set forth in paragraph SC-4.02 of the Supplementary Conditions of the extent of the "technical data" contained in such reports and drawings upon which Bidder is entitled to rely, as provided in paragraph 4.02 of the General Conditions. Bidder acknowledges that such reports and drawings are not Contract Documents and may not be complete for Bidder's purposes. Bidder acknowledges that Owner and Engineer do not assume responsibility for the accuracy or completeness of information and data shown or indicated in the Bidding Documents with respect to Underground Facilities at or contiguous to the site.

d. Bidder has obtained and carefully studied (or assumes responsibility for having done so) all such additional or supplementary examinations, investigations, explorations, tests, studies and data concerning conditions (surface, subsurface and Underground Facilities) at or contiguous to the site or otherwise which may affect cost progress, performance or furnishing of the Work, or which relate to any aspect of the means, methods, techniques, sequences and procedures of construction to be employed by Bidder and safety precautions and programs incident thereto. Bidder does not consider that any additional examinations, investigations, explorations, tests, studies or data are necessary for the determination of this Bid for performance and furnishing of the Work in accordance with the times, price and other terms and conditions of the Contract Documents.

e. Bidder understands the full extent and scope of Work to be performed by Owner and others at the site that relates to Work for which this Bid is submitted.

f. Bidder has correlated the information known to Bidder, information and observations obtained from visits to the site, reports and drawings identified in the Contract Documents and all additional examinations, investigations, explorations, tests, studies and date with the Contract Documents.

g. Bidder has given Engineer written notice of all conflicts, errors, ambiguities or discrepancies that Bidder has discovered in the Contract Documents and the written resolution thereof by Engineer is acceptable to Bidder, and the Contract

Documents are generally sufficient to indicate and convey understanding of all terms and conditions for performing and furnishing the Work for which this Bid is submitted.

h. This Bid is genuine and not made in the interest of or on behalf of any undisclosed person, firm or corporation and is not submitted in conformity with any agreement or rules of any group, association, organization or corporation; Bidder has not directly or indirectly induced or solicited any other Bidder to submit a farce or sham Bid; Bidder has not solicited or induced any person, firm or corporation to refrain from bidding; and Bidder has not sought by collusion to obtain for itself any advantage over any other Bidder or over Owner.

i. Bidder hereby agrees to commence Work under this contract on or before a date to be specified in the Notice to Proceed and to fully complete all work of the project within the Contract Time specified in the Scope of Work Agreement (Section 00500). Bidder further accepts the provisions of the Scope of Work Agreement as to liquidated damages and agrees to pay as liquidated damages the amount stated in the Scope of Work Agreement (Section 00500), for each consecutive calendar day completion of the Work is delayed.

Completion Schedule:

1) The Work shall be substantially complete within the Contract Time specified in Article 3.1 of the Proposed Scope of Work Agreement (Section 00500).

2) The Work shall be finally complete within the contract Time specified in Article 3.2 of the Proposed Scope of Work Agreement (Section 00500).

4. All bid items shall include all materials, equipment, labor, permit fees, taxes, tests, miscellaneous costs of all types, overhead, and profit for the item to be complete, in place, and ready for operation in the manner contemplated by the Contract Documents. Bidder submits the **TOTAL BID OR TOTAL BASE BID** to perform all the Work, as required by the Drawings and Specifications.

5. The following documents are made a condition of this Bid:

a. **Bidding Documents and shall include the following**:

1. Bid Forms (entire Section 00300, 00301, 00301A, 00302, 00303 and 00310)
2. Bid Bond (Surety Bond or Cashier's Check). (Section 00410)
3. Non-collusion Affidavit (Section 00480)
4. Conflict of Interest Disclosure (Section 00480a)
5. Certification of Non-segregated Facilities (Section 00481)
6. Sworn Statement on Public Entity Crimes (Section 00482)
7. Certification of Nondiscriminatory Labor Practices (Section 00483)
8. Certification Regarding Scrutinized Companies' List (Section 00484)

ITB #24-002 Bid Form (Page 1 of 3)					
Item No.	Item Description	Quantity	Unit	Unit Price	Total Price
	GENERAL				
1.01	MOBILIZATION	1	LS	$180,000.00	$ 180,000.00
1.02	MAINTENANCE OF TRAFFIC	1	LS	$290,000.00	$ 290,000.00
1.03	SEDIMENT BARRIER	1,678	LF	$ 6.00	$ 10,068.00
1.04	INLET PROTECTION SYSTEM	5	EA	$ 800.00	$ 4,000.00
1.05	CLEARING & GRUBBING	1.87	AC	$216,786.63	$ 405,391.00
1.06	REMOVAL OF EXISTING CONCRETE	978	SY	$ 50.00	$ 48,900.00
1.07	MAILBOX, RELOCATE	14	EA	$ 1,200.00	$ 16,800.00
1.08	WEIGH SCALE REMOVAL & RESTORATION	1	LS	$ 24,500.00	$ 24,500.00
1.09	REGULAR EXCAVATION	2,179	CY	$ 30.00	$ 65,370.00
1.10	EMBANKMENT	195	CY	$ 80.00	$ 15,600.00
1.11	TYPE B STABILIZATION (LBR40) (12")	4,050	SY	$ 14.00	$ 56,700.00
1.12	OPTIONAL BASE GROUP 09 CRUSHED CONC. (10")	3,205	SY	$ 40.00	$ 128,200.00
1.13	MILLING EXISTING ASPHALT PAVEMENT, 1" AVG DEPTH	207	SY	$ 45.00	$ 9,315.00
1.14	SUPERPAVE ASHPALT CONC. TRAFFIC C, 1"	11	TN	$ 550.00	$ 6,050.00
1.15	SUPERPAVE ASHPALT CONC. TRAFFIC C, 2"	291	TN	$ 240.00	$ 69,840.00
1.16	INLETS, CURB, TYPE 9, P BOT <10'	8	EA	$ 10,400.00	$ 83,200.00
1.17	INLETS, CURB, TYPE 9, J BOT, <10'	1	EA	$ 13,200.00	$ 13,200.00
1.18	INLETS, CURB, TYPE 9, PARTIAL	1	EA	$ 8,500.00	$ 8,500.00
1.19	INLETS, VALLEY GUTTER, P BOTTOM <10'	6	EA	$ 15,700.00	$ 94,200.00
1.20	INLETS, VALLEY GUTTER, PARTIAL	2	EA	$ 5,500.00	$ 11,000.00
1.21	MANHOLES, J-8, <10'	3	EA	$ 16,400.00	$ 49,200.00
1.22	MANHOLE, ADJUST	3	EA	$ 2,000.00	$ 6,000.00
1.23	PIPE CULVERT, RCP, ROUND, 24" S/CD	1,133	LF	$ 180.00	$ 203,940.00
1.24	PIPE CULVERT, RCP, ROUND, 30" S/CD	204	LF	$ 250.00	$ 51,000.00
1.25	PIPE CULVERT, RCP, OTHER SHAPE - ELIP/ARCH, 34"X53" S/CD	78	LF	$ 700.00	$ 54,600.00
1.26	CURB AND GUTTER, TYPE F	1,069	LF	$ 40.00	$ 42,760.00
1.27	CURB AND GUTTER, TYPE F, DROP CURB	681	LF	$ 45.00	$ 30,645.00
1.28	CONCRETE CURB, TYPE B	1,798	LF	$ 40.00	$ 71,920.00
1.29	CONCRETE CURB, TYPE D	711	LF	$ 35.00	$ 24,885.00
1.30	CONCRETE, SIDEWALK, CURB RAMP, 4" THICK	1,858	SY	$ 120.00	$ 222,960.00
1.31	CONCRETE, DRIVEWAYS, TRAIL, SEATING PADS, 6" THICK	1,500	SY	$ 160.00	$ 240,000.00
1.32	PAVERS, ARCHITECTURAL, ROADWAY W/ IN-SITU INFILROMETER (6)	701	SY	$ 200.00	$ 140,200.00
1.33	DETECTABLE WARNINGS	416	SF	$ 45.00	$ 18,720.00
1.34	BEDDING STONE (15", NO. 57 STONE)	453	TN	$ 170.00	$ 77,010.00

ITB #24-002 Bid Form (Page 2 of 3)					
Item No.	**Item Description**	**Quantity**	**Unit**	**Unit Price**	**Total Price**
1.35	PERFORMANCE TURF, SOD	6,436	SF	$ 5.00	$ 32,180.00
1.36	SINGLE POST SIGN, F&I, GM, 12-20 SF	10	AS	$ 1,000.00	$ 10,000.00
1.37	PAINTED PAVEMENT MARKINGS, FINAL SURFACE	1	LS	$ 5,000.00	$ 5,000.00
1.38	THERMOPLASTIC, STD, WHITE, SOLID, 12"	48	LF	$ 10.00	$ 480.00
1.39	THERMOPLASTIC, STD, WHITE, SOLID, 24"	104	LF	$ 22.00	$ 2,288.00
1.40	THERMOPLASTIC, STD, WHITE, MESSAGE	2	EA	$ 1,000.00	$ 2,000.00
1.41	THERMOPLASTIC, STD, OPEN GRADED, WHITE, SOLID, 6"	0.0352	GM	$ 30,000.00	$ 1,056.00
1.42	THERMOPLASTIC, STD, OPEN GRADED, YELLOW, SOLID, 6"	0.0112	GM	$ 30,000.00	$ 336.00
	UTILITIES				
2.01	REMOVE EXISTING 2" PIPE	330	LF	$ 30.00	$ 9,900.00
2.02	REMOVE EXISTING 3" PIPE	105	LF	$ 35.00	$ 3,675.00
2.03	REMOVE EXISTING 6" PIPE	1,125	LF	$ 35.00	$ 39,375.00
2.04	2" PE WATER MAIN	30	LF	$ 75.00	$ 2,250.00
2.05	4" DI WATER MAIN	295	LF	$ 140.00	$ 41,300.00
2.06	6" DI WATER MAIN	580	LF	$ 145.00	$ 84,100.00
2.07	8" DI WATER MAIN	382	LF	$ 155.00	$ 59,210.00
2.08	GATE VALVE WITH BOX (6")	5	EA	$ 3,000.00	$ 15,000.00
2.09	GATE VALVE WITH BOX (8")	3	EA	$ 4,500.00	$ 13,500.00
2.10	TAPPING SLEEVE AND VALVE ASSEMBLY (2")	1	EA	$ 5,000.00	$ 5,000.00
2.11	TAPPING SLEEVE AND VALVE ASSEMBLY (6")	2	EA	$ 9,000.00	$ 18,000.00
2.12	CUT-IN CONNECTION TO EXISTING WATER MAIN	8	EA	$ 5,000.00	$ 40,000.00
2.13	LINE STOP ASSEMBLY (6")	2	EA	$ 15,000.00	$ 30,000.00
2.14	2" BLOW OFF ASSEMBLY	1	EA	$ 4,000.00	$ 4,000.00
2.15	OFFSET AIR RELEASE VALVE ASSEMBLY (2" DIAMETER)	2	EA	$ 7,500.00	$ 15,000.00
2.16	REMOVE AND SALVAGE FIRE HYDRANT	3	EA	$ 10,500.00	$ 31,500.00
2.17	CLOSE, PLUG, AND ABANDON EXISTING 3" GATE VALVE	1	EA	$ 3,000.00	$ 3,000.00
2.18	1" WATER SERVICE CONNECTION	12	EA	$ 1,500.00	$ 18,000.00
2.19	8" PVC SAN SEWER (0-6 FT. DEEP)	308	LF	$ 100.00	$ 30,800.00
2.20	4' DIA. SAN SEWER MANHOLE (0-6 FT. DEEP)	1	EA	$ 10,500.00	$ 10,500.00
2.21	SINGLE LATERAL SERVICE (0-8 FT DEEP)	9	EA	$ 4,500.00	$ 40,500.00
	LANDSCAPE & HARDSCAPE				
3.01	DECORATIVE WALL, F&I, COMPLETE	2	EA	$ 75,000.00	$ 150,000.00
3.02	DECORATIVE COLUMN, F&I, COMPLETE	4	EA	$ 27,620.00	$ 110,480.00
3.03	DECORATIVE BENCHES, F&I, COMPLETE	8	EA	$ 2,470.00	$ 19,760.00
3.04	CONCRETE RIBBON CURB	313	LF	$ 50.00	$ 15,650.00
3.05	LANDSCAPE IRRIGATION SYSTEM, F&I, COMPLETE	1	EA	$ 75,000.00	$ 75,000.00

ITB #24-002 Bid Form (Page 2 of 3)					
Item No.	**Item Description**	**Quantity**	**Unit**	**Unit Price**	**Total Price**
3.06	MULCH	92	CY	$ 60.00	$ 5,520.00
3.07	TREE ROOT BARRIER	2,192	LF	$ 8.00	$ 17,536.00
3.08	CRAPE MYRTLE	23	EA	$ 700.00	$ 16,100.00
3.09	HIGHRISE LIVE OAK	11	EA	$ 2,000.00	$ 22,000.00
3.10	CABBAGE PALM	22	EA	$ 600.00	$ 13,200.00
3.11	FIREFLY FIREBUSH	232	EA	$ 20.00	$ 4,640.00
3.12	MRS SCHILLERS VIBURNUM	98	EA	$ 30.00	$ 2,940.00
3.13	BABY PETE AGAPANTHUS	1,749	EA	$ 15.00	$ 26,235.00
3.14	MUHLY GRASS	327	EA	$ 15.00	$ 4,905.00
3.15	POWDERPUFF MIMOSA	1,802	EA	$ 15.00	$ 27,030.00
3.16	PEACH DRIFT ROSE	180	EA	$ 25.00	$ 4,500.00
	DUKE ENERGY ITEM				
4.01	6" PVC SCHEDULE 40 CONDUIT F&I	1,500	LF	$ 33.00	$ 49,500.00
Total Base Bid Cost:					**$ 3,907,620.00**
Written Total Base Bid Cost:					

LEGEND: AC = Acre; AS = Assembly; CY = Cubic Yard; GM = Gross Mile; EA = Each; LF = Linear Foot; LS = Lump Sum; SY = Square Yard; TN = U.S. Ton

Company Name: Southern Development & Construction

By: Shane R. Cox, VP Estimating

Notes:

1. Pay items obtained from the Florida Department of Transportation (FDOT) Basis of Estimates (BOE) dated 2014.
2. Reference Specification Section 01025 Measurement and Payment for a detailed list of Bid Items.
3. All areas disturbed by construction are to be restored to match existing to equal or better condition.
4. The Contractor is to verify all quantities prior to BID.

SUBSTITUTION LIST

Bidder offers the following substitutions and "equal" items.

Equipment Item or Material	Spec Section	Alternative Manufacturer/Supplier (List One Only)	Deductible Amount* (Indicate Whether Lump Sum or Unit Price)
N/A			

Represents 50 percent of the difference in cost in accordance with the General Conditions
(Minimum Deductible Amount per Substitution Item shall be $1,000)
(Bidder may make additional copies of this page as required.)

Strike out (X) non-applicable signature block and complete applicable block. (ALL SIGNATORIES MUST HAVE THEIR NAMES PRINTED OR TYPED BELOW THEIR SIGNATURES)

If Bidder is:

SOLE PROPRIETORSHIP

(SEAL)

(Individual's Signature)

(Individual's Name)

doing business as

Business Address:

Phone No.:

Florida License No.: _____

A PARTNERSHIP

(SEAL)

(Partnership Name)

(General Partner's Signature)

(General Partner's Name)

Business address:

Phone No.:

Florida License No.: _____

Strike out (X) non-applicable signature block and complete applicable block. (ALL SIGNATORIES MUST HAVE THEIR NAMES PRINTED OR TYPED BELOW THEIR SIGNATURES)
If Bidder is:

A CORPORATION

Southern Development & Construction Inc
(Corporation Name)

Florida
(State of Incorporation)

By Shane R. Cox
(Name of person authorized to sign)

VP Estimating
(Title)

(Authorized Signature)

(Corporate Seal)

Attest

(Secretary)

Business address: 2544 Connection Point Oviedo, FL 32765

Phone No.: 407-977-9898

Corporation President: Thomas J McNamara

Florida License No.: See Attached, CBC 060345, CUC 1224501 & FDOT Certification

Strike out (X) non-applicable signature block and complete applicable block. (ALL SIGNATORIES MUST HAVE THEIR NAMES PRINTED OR TYPED BELOW THEIR SIGNATURES)

If Bidder is:

A JOINT VENTURE

By

(Name)

(Address)

By

(Name)

(Address)

Business Address:

Phone No.:

Florida License No.:

(Each joint venturer must sign. The manner of signing for each individual, partnership, and corporation that is a party to the joint venture should be in the manner indicated above.)

Florida License No.:

13. List the following in connection with the Surety which is providing the Bid Bond:

Surety's Name: United Fire & Casualty Company

Surety's Address: 118 Secon Ave SE

Cedar Rapids, IA 52401

14. Name and address of Surety's resident agent for service of process in Florida:

Florida Surety Bonds, Inc.

620 N. Wymore Rd, Suite 200

Maitland, Fl 32751

407-786-7770

CORPORATE AUTHORITY TO EXECUTE DOCUMENTS

I HEREBY CERTIFY that a meeting of the Board of Directors of _____ Southern Development & Construction Inc _____, a corporation under
(Contractor's Corporate Name)
the laws of the State of Florida, held on the 1st day of January, 2019, the following resolution was duly passed and adopted:

"RESOLVED, that _____ Shane R. Cox _____
(signature of individual) (typed name of individual)
as VP Estimating of the corporation, is hereby authorized to execute and all documents required to be signed by an officer of the Corporation in order to submit a valid bid, contract and bond for

CITY OF OCOEE
ITB #24-002 W. Oakland Ave Reconstruction

between the CITY OF OCOEE, a municipal corporation, and this corporation, and that his execution thereof, attested by the Secretary of the corporation and with corporate seal affixed shall be the official act and deed of this corporation."

I FURTHER CERTIFY that said resolution is now in full force and effect.

IN WITNESS WHEREOF, I have hereunto set my hand and affixed the official seal of the corporation this 4th day of DEC, 2023.
(CORPORATE SEAL)

_____ (Corporate Secretary)

STATE OF Florida
CITY OF Oviedo

The foregoing instrument was acknowledged before me this 4th day of December, 2023 by _____
(name of officer or agent, title of officer or agent), of Southern Development & Construction Inc (name of corporation acknowledging), a FLORIDA (state or place of incorporation) corporation, on behalf of the corporation. He/She is personally known to me or has produced identification _____ (type of identification) as identification and did/did not take an oath.

_____
(Notary Public)
My Commission Expires: 8/31/26

Notary Public State of Florida
Carolyn Mercurio
My Commission HH 295447
Expires 8/31/2026

END OF SECTION

SECTION 00301
QUESTIONNAIRE

Bidder shall fill out questionnaire form with all information pertinent to his/her company: failure of the Bidder to provide all information required in this form may cause your Bid to be deemed Non-Responsive.

DATE: 12/5/2023

PROJECT IDENTIFICATION: City of Ocoee
ITB #24-002 W. Oakland Ave Reconstruction

NAME OF BIDDER: Southern Development & Construction Inc

BUSINESS ADDRESS: 2544 Connection Point Oviedo, FL 32765

TELEPHONE NO.: 407-977-9898 EMAIL SHANE@SDCFL.COM

CONTRACTOR'S FLORIDA LICENSE NO. See Attached, CBC 060345, CUC 1224501 & FDOT Certification

The undersigned warrants the truth and accuracy of all statements and answers herein contained. Include additional sheets if necessary.

1. How many years has your organization been in business licensed Florida Contractor?
13 Yrs

2. Describe and give the date and owner contat information of the last 3 (three) projects that you have completed in the last 10 (ten) years with surface and sub-surface construction elements included within the proposed project scope?

1) Seminole County 5-Points Complex Connector Road - Seminole County, Steve Miller, PE, 407-665-5674 Smiller02@seminolecountyfl.com
This 15 acre site consisted of specialized clearing with the use of floating machinery, 109,000 cy of excavation, 35,000 cy of subsoil excavation, 600,000 sf geogrid, 34,000 lf of wick drains and temp surcharge embankment, 2,100 lf storm drainage, 3,700 sy of base & paving. Project completed 6-months ahead of schedule -- $ 5,550,505

2) City of Winter Garden, RFP 08005 - Marsh Rd Widening & Roundabout Improvements, $ 7,874,777 - Jon Williams, City Manager
Scope included, earthwork, base paving, sheet pile wall, utility relocations, curb & gutter, sidewalk, Architectual brick pavers, fencing, underdrain, signage, pavement marking & grassing

3) Normandy Off-Site for Amazon Distribution Deltona FL - For the Conlan Company
$ 9.1 million of off-site improvements on Howland Blvd, Normandy Blvd & Graves Ave in Volusia County including earthwork, utilities, drainage, base, paving & signalization
Contact Billy Latsko, 770-241-6606 - Project Manager

Have you ever failed to complete work awarded to you? If so, where and why?
No

4. Name three (3) municipalities for which you have performed similar work and contact person:

Semiole County - Steve Miller, PE 407-665-5674

City of Winter Garden John Monahan, PE 407-656-4111 x 5463

City of Kissimmee, Victor Aponte, 407-246-9439

5. Have you personally inspected the site of the proposed Work? Describe any anticipated problems with the site and your proposed solutions?

Yes

Chanllenges are the traveling public. They must be kept informed

6. Will you Subcontract any part of this Work? If so, describe which portions and the percentage of the project:

Yes,

Landscaping/Irrigation 3%

Pavement Marking / Signage < than 1%

Trucking < 1%

Pavers 1.2%

7. What equipment do you plan on using to complete the Work?

Excavators, loaders, skidsteers, compactors, Paving equipment

8. State the true and exact, correct, and complete name under which you do business.

Bidder is: Southern Development & Construction Inc

SECTION 00301-A

SUBCONTRACTOR & SUPPLIER LIST

Will your firm be doing all the Work with your own forces? Yes____ No X (Check yes only if no subcontracting opportunities exist. If you will be doing portions of the Work with your own forces, list these areas and approximate dollar amount allocated for this Work. List suppliers).

List all proposed subcontractors and suppliers to be used to include company names, contractor license number, contact, addresses, phone numbers, type of work subcontracted (trade/commodity), and dollar amount of work. Provide all information requested. Use additional sheets if necessary.

Submit Update Subcontractor/Supplier List with each progress payment requested. Submit Final Subcontractor/Supplier List with Final Payment Request.

COMPANY NAME, CONTACT ADDRESS, PHONE NUMBER	WORK TO BE PERFORMED (TRADE) OR COMMODITY TO BE SUPPLIED	ESTIMATED DOLLAR AMOUNT
1 Paverscape Inc. 2430 RIdgemoor Dr Orlando, FL 3288 Chad Love - 407-720-1405	Pavers	$ 50,000.00
2 Acme Barricades 508 Clifton St Orlando, FL 813-695-3690 Mike Moore	Traffic Control Devices	$ 20,000.00
3 Dobson's Woods & Water Landscapes, Inc 851 Maguire, Rd, Ocoee Fl 34761 407-841-0030 Jake Coleman, Jake@dobsonsww.com	Landscaping/Irrigation	$ 165,000.00
4 Mack Concrete Industries Box 157, Astatula, FL 34705 352-742-2333, Scott Edwards	Precast Storm / Sanitary	$ 90,000.00
5 Core & Main 590 Ferguson Dr. Orlando, FL 32805 Bill Hayford, 407-235-5690	Utility Material	$ 100,000.00
6 In House - A Southern Development & Construction Company A-1 Paving & Asphalt	Asphalt Paving	$ 70,000.00
7		

END OF SECTION

SECTION 00302

COMPLIANCE WITH FLORIDA TRENCH SAFETY ACT (90-96, LAWS OF FLORIDA)

Bidder hereby acknowledges that all costs for complying with the Florida Trench Safety Act are included in the various items of the bid and in the Lump Sum Total Bid Price shown in Section 00300 - Bid Form, "Schedule of Bid Items". For informational purposes only, the bidder is required to further identify these costs in the summary below.

	Trench Safety Measure (Description)	Unit of Measure (LF, SY)	Unit (Quantity)	Unit Cost	Extended Cost
A	Open cut / Trench Shield	LF	1,400	$ 5.00	$ 7,000
B				$	$
C				$	$
D				$	$
				TOTAL	$ 7,000

BIDDER: Southern Development & Construction Inc

SIGNED: Shane R. Cox

BY: Shane R. Cox
(Print or type name)

TITLE: VP Estimating

DATE: 12/4/2023

THIS IS NOT A PAY ITEM: The purpose of this form is to gather information on the costs associated with trench safety measures and to insure that the Bidder has considered these costs and included them in the Lump Sum Total Bid price. Contractor will not receive additional payment if actual quantities differ from those estimated or if the Contractor uses a safety measure different than those listed.

(Failure to Complete This Form May Result in the Bid Being Declared Non-Responsive.)

END OF SECTION

SECTION 00303

DRUG-FREE WORKPLACE CERTIFICATION

IDENTICAL TIE BIDS: Preference shall be given to businesses with drug-free workplace programs. Whenever two or more bids which are equal with respect to price, quantity, and service are received by the State or by any political subdivision for the procurement of commodities or contractual services, a bid received from a business that certifies that it has implemented a drug-free workplace program shall be given preference in the award process. Established procedures for processing tie bids will be followed if none of the tied vendors have a drug-free workplace program (Florida Statutes Section 287.037). In order to have a drug-free workplace program, a business shall:

1. Publish a statement notifying employees that the unlawful manufacture, distribution, dispensing, possession, or use of a controlled substance is prohibited in the workplace and specifying the actions that will be taken against employees for violations of such prohibition.

2. Inform employees about the dangers of drug abuse in the workplace, the business's policy of maintaining a drug-free workplace, and available drug counseling, rehabilitation, and employee assistance programs, and the penalties that may be imposed upon employees for drug abuse violations.

3. Give each employee engaged in providing the commodities or contractual services that are under bid a copy of the statement specified in subsection (1).

4. In the statement specified in subsection (1), notify the employees that, as a condition of working on the commodities or contractual services that are under bid, the employee will abide by the terms of the statement and will notify the employer of any conviction of, or pleas of guilty or *nolo contendere* to, any violation of Chapter 893 or of any controlled substance law of the United States or any state, for a violation occurring in the workplace no later than five (5) days after such conviction.

5. Impose a sanction on, or require the satisfactory participation in a drug abuse assistance or rehabilitation program is such is available in the employee's community, by any employee who is so convicted.

6. Make a good faith effort to continue to maintain a drug-free workplace through implementation of this section.

As the person authorized to sign the statement, I certify that this firm complies fully with the above requirements.

Bidder: Southern Development & Construction Inc

Signed: Shane R. Cox

By: Shane R. Cox
(Print or Type Name)

Title: VP Estimating

Date: 12/4/2023

END OF SECTION

SECTION 00310

CONTRACTOR E-VERIFY AFFIDAVIT

I hereby certify that Southern Development & Construction Inc [contractor] does not employ, contract with, or subcontract with an unauthorized alien, and is otherwise in full compliance with Section 448.095, Florida Statutes.

All employees hired on or after January 1, 2021 have had their work authorization status verified through the E-Verify system.

A true and correct copy of Southern Development & Construction Inc [contractor] proof of registration in the E-Verify system is attached to this Affidavit.

Shane R Cox

Print Name: Shane R. Cox VP Estimating

Date: 12/4/2023

STATE OF Florida

COUNTY OF Seminole

The foregoing instrument was acknowledged before me by means of ☑physical presence or ☐online notarization, this 12/4/23 (date) by SHANE R. COX (name of officer or agent, title of officer or agent) of _____ (name of contractor company acknowledging), a FLORIDA (state or place of incorporation) corporation, on behalf of the corporation. He/she is personally known to me or has produced _____ (type of identification) as identification.

[Notary Seal]

Carolyn Mercurio

Notary Public

CAROLYN MERCURIO

Name typed, printed or stamped

Notary Public State of Florida
Carolyn Mercurio
My Commission HH 295447
Expires 8/31/2026

My Commission Expires: 8/31/26

E-VERIFY IS A SERVICE OF DHS AND SSA

Welcome to E-Verify – You have been designated as the E-Verify Enrollment Point of Contact (POC).

To complete your company's enrollment, go to https://idp.uscis.gov/verify/everify/b0ceda22-e1bd-444d-aef7-9cb3019e14b6 and log in with the temporary user ID and password provided below:

- Your temporary user ID: NATH4709
- Your password: Evy~304b

Note: For security purposes your enrollment link will expire 24 hours after receipt of your confirmation email.

E-Verify Resources:

- Join a free E-Verify webinar
- Review the E-Verify Manuals, Guides and Job Aids
- Watch E-Verify Videos
- Call E-Verify Customer Support at 888-464-4218 Monday through Friday, from 8 a.m. to 8 p.m. Eastern, TTY - for hearing and speech impaired users phone 877-875-6028 (except when the federal government is closed) or contact us at E-Verify@uscis.dhs.gov.

FLORIDA SURETY BONDS, INC.

Maitland, FL
407-786-7770

www.FloridaSuretyBonds.com

SECTION 00410
BID BOND

Bidder shall provide the City with a Bid Bond in the amount of five percent (5%) of the contract bid.

KNOW ALL MEN BY THESE PRESENTS, that we, the undersigned, Southern Development & Construction, Inc., as Principal, and United Fire & Casualty Company as Surety, are hereby held and firmly bound unto the City of Ocoee, Florida, as Owner, in the penal sum of, (5 percent of the Contract Bid) $*195,381

ONE HUNDRED, NINETY FIVE THOUSAND, THREE HUNDRED EIGHTY ONE DOLLARS XX/100

(written amount in dollars and cents)

for the payment of which, well and truly to be made, we hereby jointly and severally bind ourselves, successors and assigns.

Signed this 5th day of December, 2023. The Condition of the above obligation is such that whereas the Principal has submitted to the City of Ocoee, Florida a certain Bid, attached hereto and hereby made a part hereof to enter into a contract in writing, for the Project: "ITB #24-002 W. Oakland Ave Reconstruction."

NOW THEREFORE

1. Bidder and Surety, jointly and severally, bind themselves, their heirs, executors, administrators, successors and assigns to pay to Owner upon default of Bidder any damages, costs, or expenses, including attorney's fees, incurred by Owner that are proximately caused by such default. In no event shall Bidder's and Surety's obligation hereunder exceed the penal sum set forth on the face of this Bond.

2. Default of Bidder shall occur upon the failure of Bidder to deliver within the time required by the Bidding Documents (or any extension thereof agreed to in writing by Owner) the executed Agreement required by the Bidding Documents and any performance and payment bonds required by the Bidding Documents and Contract Documents.

3. This obligation shall be null and void if:

   3.1 Owner accepts Bidder's bid and Bidder delivers within the time required by the Bidding Documents (or any extension thereof agreed to in writing by Owner) the executed Agreement required by the Bidding Documents and any performance and payment bonds required by the Bidding Documents and Contract Documents, or

   3.2 All bids are rejected by Owner, or

   3.3 Owner fails to issue a Notice of Intent to Award to Bidder within ninety (90) days from the time and date fixed for the opening of Bids (or any extension thereof agreed to in writing by Bidder and, if applicable, consented to by Surety when required by paragraph 5 hereof).

4. Payment under this Bond will be due and payable upon default by Bidder and within 30 calendar days after receipt by Bidder and Surety of written notice of default from Owner, which notice will be given with reasonable promptness, identifying this Bond and the Project and including a statement of the amount due.

5. Surety waives notice of and any and all defenses based on or arising out of any time extension to issue notice of award agreed to in writing by Owner and Bidder, provided that the total time for issuing notice of award including extensions shall not in the aggregate exceed 120 days from Bid Due Date without Surety's written consent.

6. No suit or action shall be commenced under this bond prior to 30 calendar days after the notice of default required in paragraph 4 above is received by Bidder and Surety and in no case later than one year after Bid Due Date.

7. Any suit or action under this Bond shall be commenced only in a court of competent jurisdiction located in the state in which the Project is located.

8. Notices required hereunder shall be in writing and sent to Bidder and Surety at their respective addresses shown on the face of this Bond. Such notices may be sent by personal delivery, commercial courier or by United States Registered or Certified Mail, return receipt requested, postage pre-paid, and shall be deemed to be effective upon receipt by the party concerned.

9. Surety shall cause to be attached to this Bond, a current and effective Power of Attorney evidencing the authority of the officer, agent or representative who executed this Bond on behalf of Surety to execute, seal and deliver such Bond and bind the Surety thereby.

10. This Bond is intended to conform to all applicable statutory requirements. Any applicable requirement of any applicable statute that has been omitted from this Bond shall be deemed to be included herein as if set forth at length. If any provision of this Bond conflicts with any applicable provision of any applicable statute, then the provision of said statute shall govern and the remainder of this Bond that is not in conflict therewith shall continue in full force and effect.

11. The term "bid" as used herein includes a bid, offer, or proposal as applicable.

IN WITNESS WHEREOF, the Principal and the Surety have hereunto set their hands and seals, and such of them as are corporations have caused their corporate seals to be hereto affixed and these presents to be signed by their proper officers, the day and year first set forth above.

BIDDER:	Strike out (X) non-applicable signature blocks and complete applicable block. All signatures must have their names printed or type below their signature.

If Bidder is **SOLE PROPRIETORSHIP**, complete this signature block.	
_____ (Individual's Signature)	(1) _____ (Witness)
_____ (Individual's Signature)	(2) _____ (Witness)
doing business as _____	**(SEAL)**
_____ (Business Address)	
_____ (Telephone No.) _____ (Florida License No.)	

If Bidder is **PARTNERSHIP**, complete this signature block.	
_____ (Partnership Name)	(1) _____ (Witness)
_____ (General Partner's Signature)	(2) _____ (Witness)
_____ (General Partner's Name)	**(SEAL)**
_____ (Business Address)	
_____ (Telephone No.) _____ (Florida License No.)	

If Bidder is **CORPORATION,** complete this signature block.	
Southern Development & Construction, Inc. (Corporation Name)	(1) Carolyn Moreno (Witness)
Florida (State of Incorporation)	(2) _____ (Witness)
By: SHANE R. COX (Name of Person Authorized to Sign - See Note 1)	**(SEAL)**
V.P. ESTIMATING (Title)	
(Authorized Signature)	
(Corporation President)	
2544 Connection Point Oviedo, FL 32765 (Business Address)	
407-977-9898 (Telephone No.) (Florida License No.)	

SURETY

United Fire & Casualty Company (Surety Business Name)	Witness: (If agency is not a Corporation) (1) _____ (Witness)
(PO Box 73909, Cedar Rapids, IA 52407-3909) 118 Second Ave. SE, Cedar Rapids, IA 52401 (Principal Place of Business)	(2) _____ (Witness)
By _____ (Surety Agent's Signature - See Note 2)	Attest: (If Agency is a Corporation) _____ (Corporate Secretary Signature)
Lisa A. Roseland* (Surety Agent's Name)	
Attorney-In-Fact & FL Licensed Resident Agent (Surety Agent's Title)	Susan L. Reich (Corporate Secretary Name)
Florida Surety Bonds, Inc. (Business Name of Local Agent for Surety)	(Corporate Seal)
620 N. Wymore Rd., Suite 200 Maitland, FL 32751 (Business Address)	
407-786-7770 (Telephone No.) N/A (Bond No.)	

NOTES:

(1) Complete and attach "Corporate Authority to Execute Documents" if executed by any corporate employee other than president or vice-president.

(2) Complete and attach a certified copy of "Power-of-Attorney" prepared by Surety appointing individual "Attorney-in-Fact" for execution of Bid Bond on behalf of Surety and corresponding notarized "Attorney-in-Fact".

(3) Above addresses are to be used for giving required notice.

(4) Any singular reference to Bidder, Surety, Owner or other party shall be considered plural where applicable.

(5) Surety companies executing bonds must appear on the Treasury Department's most current list (Circular 570 as amended) and be authorized to transact business in the state where the project is located.

ATTORNEY-IN-FACT AFFIDAVIT

STATE OR COMMONWEALTH OF FLORIDA)

COUNTY OR CITY OF ORANGE)

Before me, a Notary Public, personally came Lisa A. Roseland known to me, and known to be the Attorney-in-Fact of United Fire & Casualty Company, a Iowa Corporation, which
(Surety Company) (State)

executed the attached bond as surety, who deposed and said that ~~his~~ her signature and the corporate seal of said

United Fire & Casualty Company were affixed by order and authority of said Company's Board of Directors,
(Surety Company)

and that the execution of the attached bond is the free act and deed of United Fire & Casualty Company
(Surety Company)

Given under my hand and seal this 5th day of December, 2023.

Notary Public State of Florida
Elizabeth Luu Karoly
My Commission HH 283384
Expires 7/9/2026

(Notary Public) Elizabeth Luu Karoly

My Commission Expires 07/09/2026.

END OF SECTION

UNITED FIRE & CASUALTY COMPANY, CEDAR RAPIDS, IA
UNITED FIRE & INDEMNITY COMPANY, WEBSTER, TX
FINANCIAL PACIFIC INSURANCE COMPANY, LOS ANGELES, CA
CERTIFIED COPY OF POWER OF ATTORNEY
(original on file at Home Office of Company – See Certification)

Inquiries: Surety Department
118 Second Ave SE
Cedar Rapids, IA 52401

KNOW ALL PERSONS BY THESE PRESENTS, That United Fire & Casualty Company, a corporation duly organized and existing under the laws of the State of Iowa; United Fire & Indemnity Company, a corporation duly organized and existing under the laws of the State of Texas; and Financial Pacific Insurance Company, a corporation duly organized and existing under the laws of the State of California (herein collectively called the Companies), and having their corporate headquarters in Cedar Rapids, State of Iowa, does make, constitute and appoint

KIM E. NIV, JEFFREY W. REICH, SUSAN L. REICH, TERESA L. DURHAM, LISA A. ROSELAND, SONJA AMANDA FLOREE HARRIS, CHERYL A. FOLEY, ROBERT P. O'LINN, SARAH K. O'LINN, EMILY J. GOLECKI, NATHAN K. REICH, EACH INDIVIDUALLY

their true and lawful Attorney(s)-in-Fact with power and authority hereby conferred to sign, seal and execute in its behalf all lawful bonds, undertakings and other obligatory instruments of similar nature provided that no single obligation shall exceed $100,000,000.00 and to bind the Companies thereby as fully and to the same extent as if such instruments were signed by the duly authorized officers of the Companies and all of the acts of said Attorney, pursuant to the authority hereby given and hereby ratified and confirmed.

The Authority hereby granted is continuous and shall remain in full force and effect until revoked by United Fire & Casualty Company, United Fire & Indemnity Company, and Financial Pacific Insurance Company.

This Power of Attorney is made and executed pursuant to and by authority of the following bylaw duly adopted by the Boards of Directors of United Fire & Casualty Company, United Fire & Indemnity Company, and Financial Pacific Insurance Company.

"Article VI – Surety Bonds and Undertakings"

Section 2, Appointment of Attorney-in-Fact. "The President or any Vice President, or any other officer of the Companies may, from time to time, appoint by written certificates attorneys-in-fact to act in behalf of the Companies in the execution of policies of insurance, bonds, undertakings and other obligatory instruments of like nature. The signature of any officer authorized hereby, and the Corporate seal, may be affixed by facsimile to any power of attorney or special power of attorney or certification of either authorized hereby; such signature and seal, when so used, being adopted by the Companies as the original signature of such officer and the original seal of the Companies, to be valid and binding upon the Companies with the same force and effect as though manually affixed. Such attorneys-in-fact, subject to the limitations set of forth in their respective certificates of authority shall have full power to bind the Companies by their signature and execution of any such instruments and to attach the seal the Companies thereto. The President or any Vice President, the Board of Directors or any other officer of the Companies may at any time revoke all power and authority previously given to any attorney-in-fact.

IN WITNESS WHEREOF, the COMPANIES have each caused these presents to be signed by its vice president and its corporate seal to be hereto affixed this 24th day of January, 2023

UNITED FIRE & CASUALTY COMPANY
UNITED FIRE & INDEMNITY COMPANY
FINANCIAL PACIFIC INSURANCE COMPANY

By: Kyanna M Saylor
Vice President

State of Iowa, County of Linn, ss:

On 24th day of January, 2023, before me personally came Kyanna M. Saylor to me known, who being by me duly sworn, did depose and say; that she resides in Cedar Rapids, State of Iowa; that she is a Vice President of United Fire & Casualty Company, a Vice President of United Fire & Indemnity Company, and a Vice President of Financial Pacific Insurance Company the corporations described in and which executed the above instrument; that she knows the seal of said corporations; that the seal affixed to the said instrument is such corporate seal; that it was so affixed pursuant to authority given by the Board of Directors of said corporations and that she signed her name thereto pursuant to like authority, and acknowledges same to be the act and deed of said corporations.

Patti Waddell
Iowa Notarial Seal
Commission number 713274
My Commission Expires 10/26/2025

Patti Waddell
Notary Public
My commission expires: 10/26/2025

I, Mary A. Bertsch, Assistant Secretary of United Fire & Casualty Company and Assistant Secretary of United Fire & Indemnity Company, and Assistant Secretary of Financial Pacific Insurance Company, do hereby certify that I have compared the foregoing copy of the Power of Attorney and affidavit, and the copy of the Section of the bylaws and resolutions of said Corporations as set forth in said Power of Attorney, with the ORIGINALS ON FILE IN THE HOME OFFICE OF SAID CORPORATIONS, and that the same are correct transcripts thereof, and of the whole of the said originals, and that the said Power of Attorney has not been revoked and is now in full force and effect.

In testimony whereof I have hereunto subscribed my name and affixed the corporate seal of the said Corporations this 5th day of December, 2023.

By: Mary A Bertsch
Assistant Secretary,
UF&C & UF&I & FPIC

BPOA0049 1217

ITB#24-002 BID CONFLICT OF INTEREST DISCLOSURE FORM

The award of this contract is subject to the provisions of Chapter 112, Florida Statutes. All Bidders must disclose within their Bid: the name of any City of Ocoee employee, Mayor or City Commissioner, other City Official, or City Consultants, who owns assets or capital stock, directly or indirectly, in the Bidder's firm or any of its branches, or would directly or indirectly benefit by the profits or emoluments of this Bid. (Indirect ownership or benefit applies to any members of his or her immediate family.) Bidder certifies that no member of the entity's ownership or management is presently applying for an employee position or actively seeking an elected position with the City. In the event that a conflict of interest is identified in the provision of services, Bidder agrees to immediately notify the City in writing.

The purpose of this disclosure form is to give the City the information needed to identify potential conflicts of interest for the City Commission, Staff, and other key City employees and consultants involved in the award and administration of this contract.

According to Chapter 112, Florida Statutes, the term "conflict of interest" "means a situation in which regard for a private interest tends to lead to disregard of a public duty or interest", and refers to situations in which financial or other personal considerations may adversely affect, or have the appearance of adversely affecting, an employee's professional judgment in exercising any City duty or responsibility in administration, management, instruction, research, or other professional activities.

Please check one of the following statements and attach additional documentation if necessary:

X To the best of our knowledge, the undersigned firm has no potential conflict of interest for this Bid.

_____ The undersigned firm, by attachment to this form, submits information which may be a potential conflict of interest for this Bid.

Acknowledged by:

Southern Development & Construction Inc
Firm Name

Shane R Cox
Signature

Shane R. Cox, VP Estimating
Name and Title (Print or Type)

12/4/2023
Date

SECTION 00481
CERTIFICATION OF NONSEGREGATED FACILITIES

The Bidder certifies that he does not maintain or provide for his employees any segregated facilities at any of his establishments, and that he does not permit his employees to perform their services at any location, under this control, where segregated facilities are maintained. The Bidder certifies further that he will not maintain or provide for his employees any segregated facilities at any of his establishments, and that he will not permit his employees to perform their services at any location under his control where segregated facilities are maintained. The Bidder agrees that a breach of this certification will be a violation of the Equal Opportunity clause in any contract resulting from acceptance of this Bid. As used in this certification, the term "segregated facilities" means any waiting rooms, work areas, restrooms and washrooms, restaurants and other eating areas, time clocks, locker rooms and other storage and dressing areas, parking lots, drinking fountains, recreation or entertainment area, transportation, and housing facilities provided for employees on the basis of race, color, religion, or national origin, because of habit, local custom, or otherwise. The Bidder agrees that (except where he has obtained identical certification from proposed subcontractors for specific time periods) he will obtain identical certifications from proposed subcontractors prior to the award of subcontracts exceeding $10,000 which are not exempt from the provisions of the Equal Opportunity clause, and that he will retain such certifications in his files.
The nondiscriminatory guidelines as promulgated in Section 202, Executive Order 11246, and as amended by Executive Order 11375 and as amended, relative to Equal Opportunity for all persons and implementations of rules and regulations prescribed by the United States Secretary of Labor are incorporated herein.

Note:

The penalty for making false statements in offers is prescribed in 18 U.S.C. 1001.

Date Dec 4, 2023.

By: Shane R. Cox

VP Estimating
(Title)

Official Address (including Zip Code):

2544 Connection Point Oviedo, FL 32765

ATTACH AND INCLUDE AS PART OF PROPOSAL FORM; FAILURE TO DO SO MAY BE CAUSE FOR DISQUALIFICATION OF YOUR BID.

END OF SECTION

SECTION 00482
(Page 1 of 2)

SWORN STATEMENT UNDER SECTION 287.133(3)(a), FLORIDA STATUTES, ON PUBLIC ENTITY CRIMES

THIS FORM MUST BE SIGNED IN THE PRESENCE OF A NOTARY PUBLIC OR OTHER OFFICER AUTHORIZED TO ADMINISTER OATHS.

1. This sworn statement is submitted to City of Ocoee, Florida by Southern Development & Construction Inc by Shane R. Cox, VP Estimating.
(Print individual's Name & Title)

whose business address is 2544 Connection Point Oviedo, FL 32765

2. I understand that a "public entity crime" as defined in Paragraph 287.133(1)(g), Florida Statutes, means a violation of any state or federal law by a person with respect to and directly related to the transaction of business with any public entity or with an agency or political subdivision of any other state or with the United States, including, but not limited to, any bid or contract for goods or services to be provided to any public entity or an agency or political subdivision of any other state or of the United States and involving antitrust, fraud, theft, bribery, collusion, racketeering, conspiracy, or material representation.

3. I understand that "convicted" or "conviction" as defined in Paragraph 287.133(1)(b), Florida Statutes, means a finding of guilt or a conviction of a public entity crime, with or without an adjudication of guilt, in any federal or state trial court of record relating to charges brought by indictment or information after July 1, 1989, as a result of a jury verdict, non-jury trial, or entry of a plea of guilty or nolo contendere.

4. I understand that an "affiliate" as defined in Paragraph 287.133(1)(a), Florida Statutes, means:

   a. A predecessor or successor of a person convicted of a public entity crime: or

   b. An entity under the control of any natural person who is active in the management of the entity and who has been convicted of a public entity crime. The term "affiliate" includes those officers, directors, executives, partners, shareholders, employees, members, and agents who are active in the management of an affiliate. The ownership by one person of shares constituting a controlling interest in another person, or a pooling of equipment or income among persons when not for fair market value under an arm's length agreement, shall be a *prima facie* case that one person controls another person. A person who knowingly enters into a joint venture with a person who has been convicted of a public entity crime in Florida during the preceding 36 months shall be considered an affiliate.

5. I understand that a "person" as defined in Paragraph 287.133(1)(e), Florida Statutes, means any natural person or entity organized under the laws of any state or of the United States with the legal power to enter into a binding contract and which bids or applies to bid on contracts for the provision of goods or services let by a public entity, or which otherwise transacts or applies to transact business with a public entity. The term "person" includes those officers, directors, executives, partners, shareholders, employees, members, and agents who are active in management of an entity.

6. Based on information and belief, the statement I have marked below is true in relation to the entity submitting this sworn statement. (please indicate which statement applies).

X Neither the entity submitting this sworn statement, or one or more of its officers, directors, executives, partners, shareholders, employees, members, or agents who are active in management of the entity, nor any affiliate of the entity have been charged with and convicted of a public entity crime subsequent to July 1, 1989.

_____ The entity submitting this sworn statement, or one or more of the officers, directors, executives, partners, shareholders, employees, members, or agents who are active in management of the entity, or an affiliate of this entity has been charged with and convicted of a public entity crime subsequent to July 1, 1989.

_____ The entity submitting this sworn statement, or one or more of the officers, directors, executives, partners, shareholders, employees, members, or agents who are active in management of the entity, or an affiliate of this entity has been charged with and convicted of a public entity crime subsequent to July 1, 1989. However, there has been a subsequent proceeding concerning the conviction before a Hearing Officer of the State of Florida, Division of Administrative Hearings. The final order entered by the Hearing Officer determined that it was not in the public interest to place the entity submitting this sworn statement on the convicted vendor list. (Please attach a copy of the final order.)

I UNDERSTAND THAT THE SUBMISSION OF THIS FORM TO THE CONTRACTING OFFICER FOR THE PUBLIC ENTITY IDENTIFIED IN PARAGRAPH 1 (ONE) ABOVE IS FOR THAT PUBLIC ENTITY ONLY AND, THAT THIS FORM IS VALID THROUGH 12/31/23. I ALSO UNDERSTAND THAT I AM REQUIRED TO INFORM THE PUBLIC ENTITY PRIOR TO ENTERING INTO A CONTRACT IN EXCESS OF THE THRESHOLD AMOUNT PROVIDED IN SECTION 287.017, FLORIDA STATUTES FOR CATEGORY TWO OF CHANGE IN THE INFORMATION CONTAINED IN THIS FORM.

Shane R Cox
(Signature)

Date: 12/4/2023

Southern Development & Construction Inc
Name of Bidder (Contractor)

STATE OF Florida

COUNTY OF Seminole

Sworn to (or affirmed) and subscribed before me by means of ☑ physical presence or ☐ online notarization, this 4th day of December, 20 , by SHANE R. COX in the state of FLORIDA County of SEMINOLE.

Notary Public State of Florida
Carolyn Mercurio
My Commission HH 295447
Expires 8/31/2026

Notary Public Carolyn Mercurio

My Commission Expires: 8/31/26

END OF SECTION

SECTION 00483
CERTIFICATION OF NONDISCRIMINATORY LABOR PRACTICES

This certification relates to a construction contract proposed by the City of Ocoee

Equal Opportunity Employment: The Contractor shall not discriminate on the basis of race, color, national origin, gender, age, handicapped status, veteran status, and/or religion in performing the work governed by this contract. The City is an Equal Opportunity Employer (EOE) and as such encourages all contractors to comply with EOE regulations. Any subcontract the Contractor may enter into shall include this clause with the same degree of application being encouraged.

I am the undersigned prospective construction contractor or subcontractor. I certify that:

(1) I _____ have/_____ have not participated in a previous contract or subcontract subject to the Equal Opportunity Clause and

(2) if I have participated in a previous contract or subcontract subject to the Equal Opportunity Clause, I _____ have/ _____ have not filed with the Joint Reporting Committee, the Director of the Office of Federal Contract Compliance Programs, or the Equal Employment Opportunity Commission all reports due under the applicable filing requirements.

I understand that, if I have participated in a previous contract or subcontract subject to the Equal Opportunity Clause and have failed to file all reports due under the applicable filing requirements, I am not eligible, and will not be eligible, to have my bid or offer considered, or to enter into the proposed contract or subcontract, unless and until I make an arrangement regarding such reports that is satisfactory to the office where the reports are required to be filed.

I agree that I will obtain identical certifications from prospective lower-tier sub-contractors when I receive bids or offers or initiate negotiations for any lower-tier construction subcontracts with a price exceeding $10,000. I also agree that I will retain such certifications in my files.

Date Dec 4, 2023. By: _____
(Signature of Authorized Official)

Southern Development & Construction Inc
(Name of Prospective Construction Contractor or Subcontractor)

2544 Connection Point Oviedo, FL 32765
(Address of Prospective Construction Contractor or Subcontractor)

407-977-9898 (Telephone Number) 593249904 (Employer Identification Number)

END OF SECTION

Certification Regarding Scrutinized Companies' Lists

The Respondent certifies that the company is not participating in a boycott of Israel. The Respondent certifies that the Respondent is not on the Scrutinized Companies that Boycott Israel List, not on the Scrutinized Companies with Activities in Sudan List, not on the Scrutinized Companies with activities in the Iran Petroleum Energy Sector List, or has been engaged in business operations in Cuba or Syria, as those terms are used and defined in sections 287.135 and 215.473 of the Florida Statutes. In the event that the Respondent is unable to provide such certification but still seeks to be considered for award of this solicitation, the Respondent shall, on a separate piece of paper, clearly state that it is on one or both of the Scrutinized Companies lists and shall furnish together with its proposal a duly executed written explanation of the facts supporting any exception to the requirement for certification that it claims under Section 287.135 of the Florida Statutes. The Respondent agrees to cooperate fully with the City in any investigation undertaken by the City to determine whether the claimed exception would be applicable. The City shall have the right to terminate any contract resulting from this solicitation for default if the Respondent is found to have submitted a false certification, or to have been placed on the Scrutinized Companies that Boycott Israel List, or to have been placed on the Scrutinized Companies for Activities in Sudan List, or the Scrutinized Companies with Activities in the Iran Petroleum Energy Sector List, or has been engaged in business operations in Cuba or Syria.

Name of Respondent: Southern Development & Construction Inc

By: _____
(Authorized Signature)

Title: VP Estimating

Date: 12/4/2023

SOUTHERN DEVELOPMENT & CONSTRUCTION, INC

Letter of Authority

January 1, 2019

To Whom It May Concern,

I, Mr. Thomas McNamara, President of Southern Development & Construction, Inc, I hereby authorize Mr. Shane Cox Vice-President of Estimating and an officer of Southern Development & Construction, Inc to act on my/our behalf in all manners relating to estimating and bidding, including signing of all documents relating to these matters. Any and all acts carried out by Mr. Shane Cox on my/our behalf, shall have the same effect as acts of my/our own. Mr. Shane Cox correct signature sample is below.

This authorization is valid until further written notice from Mr. Thomas McNamara, Southern Development & Construction, Inc.

Signature Sample of Mr. Shane Cox:

Mr. Shane Cox
Vice-President of Estimating
Southern Development & Construction, Inc.

Very truly yours,
SOUTHERN DESIGN CONSULTANTS, INC.

Thomas J. McNamara
President

Southern Development & Construction, Inc
656 Lake Mills Rd
Chuluota, FL 32766
Phone (407) 977-9898
eFax: 1-866-332-8272

www.SDCFL.com

Class V Fire Contractor 07732200012008
Building Contractor BC#060345
Underground Contractor UC#1224501
Electrical Contractor EC#13002610

Florida Department of Transportation

RON DESANTIS
GOVERNOR

605 Suwannee Street
Tallahassee, FL 32399-0450

JARED W. PERDUE, P.E.
SECRETARY

May 17,2023

SOUTHERN DEVELOPMENT & CONSTRUCTION, INC.
2544 CONNECTION POINT
OVIEDO, FLORIDA 32765

RE: CERTIFICATE OF QUALIFICATION

The Department of Transportation has qualified your company for the type of work indicated below.

FDOT APPROVED WORK CLASSES:
DRAINAGE, FENCING, FLEXIBLE PAVING, GRADING, GRASSING, SEEDING AND SODDING, SIDEWALK, Curb & Gutter, Driveways, Handrails, Lift Station, Retaining Wall, Rip Rap, Underground Utilities (Water & Sewer).

Unless notified otherwise, this Certificate of Qualification will expire **6/30/2024.**

In accordance with Section 337.14(4), Florida Statutes, changes to Ability Factor or Maximum Capacity Rating will not take effect until after the expiration of the current certificate of prequalification (if applicable).

In accordance with Section 337.14(1), Florida Statutes, an application for qualification must be filed within (4) months of the ending date of the applicant's audited annual financial statements.

If the company's maximum capacity has been revised, it may be accessed by logging into the Contractor Prequalification Application System via the following link:
HTTPS://fdotwp1.dot.state.fl.us/ContractorPreQualification

Once logged in, select "View" for the most recently approved application, and then click the "Manage" and "Application Summary" tabs.

The company may apply for a Revised Certificate of Qualification at any time prior to the expiration date of this certificate according to Section 14-22.0041(3), Florida Administrative Code (F.A.C.), by accessing the most recently approved application as shown above and choosing "Update" instead of "View." If certification in additional classes of work is desired, documentation is needed to show that the company has performed such work.

All prequalified contractors are required by Section 14-22.006(3), F.A.C., to certify their work underway monthly in order to adjust maximum bidding capacity to available bidding capacity. You can find the link to this report at the website shown above.

Sincerely,

James E. Taylor II

James E. Taylor II, Prequalification Supervisor
Contracts Administration Office

JTII:cg

DIVISION OF CORPORATIONS

Sunbiz.org DIVISION of CORPORATIONS an official State of Florida website

Detail by Entity Name

Florida Profit Corporation
SOUTHERN DEVELOPMENT & CONSTRUCTION, INC.

Filing Information

Document Number	P94000045482
FEI/EIN Number	59-3249904
Date Filed	06/17/1994
State	FL
Status	ACTIVE
Last Event	NAME CHANGE AMENDMENT
Event Date Filed	12/23/2009
Event Effective Date	01/01/2010

Principal Address

2544 CONNECTION POINT
OVIEDO, FL 32765

Changed: 06/11/2019

Mailing Address

2544 CONNECTION POINT
OVIEDO, FL 32765

Changed: 06/11/2019

Registered Agent Name & Address

MCNAMARA, THOMAS J
662 LAKE MILLS RD
CHULUOTA, FL 32766

Name Changed: 05/01/1995

Address Changed: 03/12/2020

Officer/Director Detail

Name & Address

Title P

MCNAMARA, THOMAS J
662 LAKE MILLS RD

SEMINOLE COUNTY BUSINESS TAX RECEIPT

PO BOX 630, SANFORD, FL 32772 • 407-665-1000
WWW.SEMINOLECOUNTY.TAX

VALID THROUGH 09/30/24

SOUTHERN DEVELOPMENT AND CONSTRUCTION INC
2544 CONNECTION PT
OVIEDO, FL 32765

Account #: 114762

THOMAS J MCNAMARA (OFFICER)

REGULATED
License # - CBC060345
Qualifier- THOMAS MCNAMARA

Receipt #: WEB#2023091331099 Amount Paid: $ 45.00 Date Paid: 09/13/2023

BUSINESS OWNER, PLEASE NOTE THE FOLLOWING:

• **DISPLAY THE ABOVE RECEIPT PROMINENTLY:** This Business Tax Receipt shall be displayed conspicuously at the place of business in such a manner that it can be open to the view of the public and subject to inspection by all duly authorized officers of the County. Upon failure to do so the business shall be subject to the payment of another business tax for the same business or profession.

• **RENEW THIS TAX BEFORE IT EXPIRES:** Pursuant to Florida Statutes, all Business Tax Receipts shall be issued by the Tax Collector beginning July 1st of each year, and it shall expire on September 30th of the succeeding year. Those Business Tax Receipts issued as renewal accounts beginning October 1st shall be delinquent and subject to a delinquency penalty of 10% for the month of October, plus an additional 5% penalty for each month of delinquency thereafter until paid; provided that the total penalty shall not exceed 25% of the business tax for the delinquent establishment (Florida Statute [FS] 205.053 [1]).

A 25% penalty shall be imposed on any individual engaged in any new business or profession without first obtaining a Seminole County Business Tax receipt ([FS] 205.053 [2]).

This Business Tax Receipt is only a receipt for business taxes paid. It does not permit the taxpayer to violate any existing regulatory or zoning laws of the state, county, or municipality, nor does it exempt the taxpayer from any other required licenses, registrations, certifications, or permits. Business Tax requirements are subject to legislative change.

REPORT ALL CHANGES: The holder of this Business Tax Receipt is required to report a change in the following: Ownership, Business Location, Mailing Address, or any other information that would alter the status of the current year's information. This includes, but is not limited to, the loss of or a change in a State or Regulatory License which was used to qualify for the business identified on the current County Business Tax Receipt. If you have any changes to report, contact the Business Tax Department at 407-665-7636.

SOUTHERN DEVELOPMENT AND CONSTRUCTION INC
2544 CONNECTION PT
OVIEDO, FL 32765

Form **W-9**
(Rev. October 2018)
Department of the Treasury
Internal Revenue Service

Request for Taxpayer Identification Number and Certification

▶ Go to *www.irs.gov/FormW9* for instructions and the latest information.

Give Form to the requester. Do not send to the IRS.

Print or type. See Specific Instructions on page 3.

1 Name (as shown on your income tax return). Name is required on this line; do not leave this line blank.
Southern Development & Construction, Inc.

2 Business name/disregarded entity name, if different from above

3 Check appropriate box for federal tax classification of the person whose name is entered on line 1. Check only one of the following seven boxes.

☐ Individual/sole proprietor or single-member LLC ☐ C Corporation ☑ S Corporation ☐ Partnership ☐ Trust/estate

☐ Limited liability company. Enter the tax classification (C=C corporation, S=S corporation, P=Partnership) ▶

Note: Check the appropriate box in the line above for the tax classification of the single-member owner. Do not check LLC if the LLC is classified as a single-member LLC that is disregarded from the owner unless the owner of the LLC is another LLC that is **not** disregarded from the owner for U.S. federal tax purposes. Otherwise, a single-member LLC that is disregarded from the owner should check the appropriate box for the tax classification of its owner.

☐ Other (see instructions) ▶

4 Exemptions (codes apply only to certain entities, not individuals; see instructions on page 3):

Exempt payee code (if any)

Exemption from FATCA reporting code (if any)

(Applies to accounts maintained outside the U.S.)

5 Address (number, street, and apt. or suite no.) See instructions.
2544 Connection Point

Requester's name and address (optional)

6 City, state, and ZIP code
Oviedo, FL 32765

7 List account number(s) here (optional)

Part I Taxpayer Identification Number (TIN)

Enter your TIN in the appropriate box. The TIN provided must match the name given on line 1 to avoid backup withholding. For individuals, this is generally your social security number (SSN). However, for a resident alien, sole proprietor, or disregarded entity, see the instructions for Part I, later. For other entities, it is your employer identification number (EIN). If you do not have a number, see *How to get a TIN,* later.

Note: If the account is in more than one name, see the instructions for line 1. Also see *What Name and Number To Give the Requester* for guidelines on whose number to enter.

Social security number
☐☐☐ - ☐☐ - ☐☐☐☐

or

Employer identification number
5 9 - 3 2 4 9 9 0 4

Part II Certification

Under penalties of perjury, I certify that:

1. The number shown on this form is my correct taxpayer identification number (or I am waiting for a number to be issued to me); and
2. I am not subject to backup withholding because: (a) I am exempt from backup withholding, or (b) I have not been notified by the Internal Revenue Service (IRS) that I am subject to backup withholding as a result of a failure to report all interest or dividends, or (c) the IRS has notified me that I am no longer subject to backup withholding; and
3. I am a U.S. citizen or other U.S. person (defined below); and
4. The FATCA code(s) entered on this form (if any) indicating that I am exempt from FATCA reporting is correct.

Certification instructions. You must cross out item 2 above if you have been notified by the IRS that you are currently subject to backup withholding because you have failed to report all interest and dividends on your tax return. For real estate transactions, item 2 does not apply. For mortgage interest paid, acquisition or abandonment of secured property, cancellation of debt, contributions to an individual retirement arrangement (IRA), and generally, payments other than interest and dividends, you are not required to sign the certification, but you must provide your correct TIN. See the instructions for Part II, later.

Sign Here Signature of U.S. person ▶ Dana Roberts Date ▶ 10/21/20

General Instructions

Section references are to the Internal Revenue Code unless otherwise noted.

Future developments. For the latest information about developments related to Form W-9 and its instructions, such as legislation enacted after they were published, go to *www.irs.gov/FormW9.*

Purpose of Form

An individual or entity (Form W-9 requester) who is required to file an information return with the IRS must obtain your correct taxpayer identification number (TIN) which may be your social security number (SSN), individual taxpayer identification number (ITIN), adoption taxpayer identification number (ATIN), or employer identification number (EIN), to report on an information return the amount paid to you, or other amount reportable on an information return. Examples of information returns include, but are not limited to, the following.

- Form 1099-INT (interest earned or paid)
- Form 1099-DIV (dividends, including those from stocks or mutual funds)
- Form 1099-MISC (various types of income, prizes, awards, or gross proceeds)
- Form 1099-B (stock or mutual fund sales and certain other transactions by brokers)
- Form 1099-S (proceeds from real estate transactions)
- Form 1099-K (merchant card and third party network transactions)
- Form 1098 (home mortgage interest), 1098-E (student loan interest), 1098-T (tuition)
- Form 1099-C (canceled debt)
- Form 1099-A (acquisition or abandonment of secured property)

Use Form W-9 only if you are a U.S. person (including a resident alien), to provide your correct TIN.

If you do not return Form W-9 to the requester with a TIN, you might be subject to backup withholding. See What is backup withholding, *later.*

Ron DeSantis, Governor

Melanie S. Griffin, Secretary

STATE OF FLORIDA
DEPARTMENT OF BUSINESS AND PROFESSIONAL REGULATION

CONSTRUCTION INDUSTRY LICENSING BOARD

THE BUILDING CONTRACTOR HEREIN IS CERTIFIED UNDER THE
PROVISIONS OF CHAPTER 489, FLORIDA STATUTES

MCNAMARA, THOMAS JOSEPH

SOUTHERN DEVELOPMENT & CONSTRUCTION, INC.
2544 CONNECTION PT
OVIEDO FL 32765

LICENSE NUMBER: CBC060345

EXPIRATION DATE: AUGUST 31, 2024

Always verify licenses online at MyFloridaLicense.com

Do not alter this document in any form.

This is your license. It is unlawful for anyone other than the licensee to use this document.

Ron DeSantis, Governor

Melanie S. Griffin, Secretary

STATE OF FLORIDA
DEPARTMENT OF BUSINESS AND PROFESSIONAL REGULATION

CONSTRUCTION INDUSTRY LICENSING BOARD

THE UNDERGROUND UTILITY & EXCAVATION CO HEREIN IS CERTIFIED UNDER THE PROVISIONS OF CHAPTER 489, FLORIDA STATUTES

MCNAMARA, THOMAS JOSEPH

SOUTHERN DEVELOPMENT & CONSTRUCTION, INC.
2544 CONNECTION PT
OVIEDO FL 32765

LICENSE NUMBER: CUC1224501

EXPIRATION DATE: AUGUST 31, 2024

Always verify licenses online at MyFloridaLicense.com

Do not alter this document in any form.

This is your license. It is unlawful for anyone other than the licensee to use this document.

Ron DeSantis, Governor

Melanie S. Griffin, Secretary

STATE OF FLORIDA
DEPARTMENT OF BUSINESS AND PROFESSIONAL REGULATION

ELECTRICAL CONTRACTORS' LICENSING BOARD

THE ELECTRICAL CONTRACTOR HEREIN IS CERTIFIED UNDER THE
PROVISIONS OF CHAPTER 489, FLORIDA STATUTES

MCNAMARA, THOMAS JOSEPH

SOUTHERN DEVELOPMENT & CONSTRUCTION, INC.
2544 CONNECTION PT
OVIEDO FL 32765

LICENSE NUMBER: EC13002610

EXPIRATION DATE: AUGUST 31, 2024

Always verify licenses online at MyFloridaLicense.com

Do not alter this document in any form.

This is your license. It is unlawful for anyone other than the licensee to use this document.

Jimmy Patronis
CHIEF FINANCIAL OFFICER

Julius Halas
DIVISION DIRECTOR

John Gatlin
BUREAU CHIEF

Catherine Thrasher
SAFETY PROGRAM MANAGER

FLORIDA DEPARTMENT OF FINANCIAL SERVICES
DIVISION OF STATE FIRE MARSHAL
200 EAST GAINES STREET - Tallahassee, Florida 32399-0342
Tel. 850-413-3644

CERTIFICATE OF COMPETENCY
OFFICIAL COPY

THIS CERTIFIES THAT: Thomas J McNamara
2544 Connection Point
Oviedo FL 32765

BUSINESS ORGANIZATION: Southern Development & Construction Inc.

Contractor V means a contractor whose business is limited to the execution of contracts requiring the ability to fabricate, install, inspect, alter, repair and service the underground piping for a fire protection system using water as the extinguishing agent beginning at the point of service as defined in the act and ending no more than 1 foot above the finished floor.

Issue Date:	07/01/2022
Type:	09
Class:	14
County:	Seminole
License/Permit #:	077322-0001-2008
Expiration Date:	06/30/2024

Jimmy Patronis

Chief Financial Officer

PROJECT MANUAL

ITB #24-002
W. Oakland Avenue Reconstruction

ocoee

florida

November, 2023

Prepared by:

City of Ocoee and CPH No. 06012

CITY OF OCOEE

ITB #24-002 W. Oakland Avenue Reconstruction

TABLE OF CONTENTS

DIVISION 0 – BIDDING AND CONTRACT REQUIREMENTS

SECTION	TITLE
00010	Legal Advertisement
00020	Invitation to Bid
00100	Instructions to Bidders
00200	Information Available to Bidders
00300	Bid Form
00301	Questionnaire
00301a	Subcontractor & Supplier List
00302	Compliance with Florida Trench Safety Act
00303	Drug-Free Workplace Certification
00310	E-Verify Affidavit
00410	Bid Bond
00480	Non-Collusion Affidavit
00480a	Conflict of Interest Disclosure
00481	Certification of Nonsegregated Facilities
00482	Sworn Statement on Public Entity Crimes
00483	Certification of Nondiscriminatory Labor Practices
00484	Certification Regarding Scrutinized Companies' List
00500	Contract for Construction
00610	Performance Bond
00620	Statutory Payment Bond
00630	Construction Performance and Payment Bonds
00640	Waiver of Right to Claim Against the Payment Bond (Final Payment)
00650	Insurance Certificates
00710	Standard General Conditions of the Construction Contract
00840	Notice Award
00841	Notice to Proceed
00842	Change Order
00843	Certificate of Substantial Completion
00844	Non-Compliance Notice
00845	Field Order & Directive Form
00847	Request for Proposed Change
00848	Daily Construction Report
00861	Application and Certificate for Payments
00863	Contractor's Final Release of Lien
00864	Shop Drawing Submittal
00865	Certificate of Final Inspection
00868	Contractor's Request for Information
00879	Waiver and Release of Lien Upon Final Payment
00881	Waiver and Release of Lien Upon Progress Payment
00883	Contractor's Final Affidavit

00885 Contractor's Interim Affidavit
00900 Addenda(s)

DIVISION 1 - GENERAL REQUIREMENTS

01001 General Requirements
01010 Summary of Work
01025 Measurement and Payment
01027 Payment App
01040 Coordination
01220 Meetings
01340 Shop Drawings
01380 Construction Photographs
01390 Audio Visual
01500 Facility Control
01567 Temp Barriers
01600 Material & Equipment
01700 Contract Closeout
01720 Record Docs
01730 Data
01800 Cleanup
01450 Quality Control
01550 MOT

DIVISION 2 – SITE CONSTRUCTION

02100 Specific Technical Specifications (Engineering Standards Manual)

DIVISION 3 APPENDIX A

22.08_Customer Guide for Installing Conduit (16 pages)
Duke Energy Conduit Plan: C-101, Plan Sheet No. 14
Geotechnical Report – Bechtol Engineering (10 pages)
W. Oakland Ave Reconstruction Plan Sheets (69 pages)

DIVISION 4 – MISCELLANEOUS FORMS

FORM 00840 Notice of Award
FORM 00841 Notice to Proceed
FORM 00842a Change Order - City Commission
FORM 00842b Change Order - City Manager
FORM 00843 Substantial Completion
FORM 00844 Non-compliance
FORM 00845 Field Order & Directive
FORM 00846 Schedule of Values
FORM 00847 Proposed Change
FORM 00848 Daily Construction Report
FORM 00861 Pay App - Application for Payment

FORM 00863	Final Release of Lien
FORM 00864	Shop Drawings
FORM 00865	Final Inspection
FORM 00868	Request for Info
FORM 00879	Waiver & Lien Release
FORM 00881	Progress Lien Release
FORM 00883	Final Affidavit
FORM 00885	Interim Affidavit

END OF TABLE OF CONTENTS

SECTION 00010

LEGAL ADVERTISEMENT

Invitation to Bid

The City of Ocoee, Florida (the "City") is soliciting sealed bids for the following project: **ITB #24-002 W. Oakland Ave Reconstruction.** Proposals will only be accepted electronically through Bonfire, a free e-Procurement platform, **until 2:00 pm, local time, on December 5, 2023.** Bids received after that time or through any other method will not be accepted under any circumstances. Bids that have been timely received will be publicly opened, virtually online and the names of the bidders read aloud at that time; instructions will be provided at https://www.ocoee.org/959/Public-Bid-Meetings. All questions regarding this ITB should be in writing to Olena Stokych, Purchasing Analyst, Finance Department/Purchasing at ostokych@ocoee.org. No Pre-Bid conference is scheduled at this time. Prospective bidders may secure a copy of the documents required for submitting a bid at no charge through Bonfire by accessing the City's published solicitation page https://ocoee.bonfirehub.com. For more information, please visit https://www.ocoee.org/323/Purchasing. Prospective bidders will be provided with all information regarding this ITB, addenda, and changes to the project requirements through the Bonfire e-Procurement Platform.
Melanie Sibbitt, City Clerk, Orlando Sentinel, November 5, 2023.

SECTION 00020

INVITATION TO ITB #24-002

W. Oakland Ave Reconstruction

OCOEE, FLORIDA

Sealed bids will be received by the City **until 2:00 pm, local time, on December 5, 2023**. The City utilizes Bonfire, an e-procurement platform. The City is ONLY accepting electronic solicitation responses online through the City's Bonfire platform at https://ocoee.bonfirehub.com. This link can also be accessed through the City's website at https://www.ocoee.org/323/Purchasing under the Current Open Solicitations menu. All responses for this bid MUST be submitted through the Bonfire platform. Submissions received in any other format will not be accepted; no paper, fax, or e-mailed submissions will be accepted. There is no charge to use the Bonfire electronic bid submission platform.

Registration with Bonfire is free and is required prior to submitting a bid response. You will be required to register once you click the PARTICIPATE BUTTON in the solicitation file. It is suggested your company register no later than 24 hours in advance of the bid submission deadline to ensure proper registration. Should your company need assistance with registering, please contact the Bonfire Service Desk by emailing support@gobonfire.com. Support by email is provided Monday to Friday from 8:00 a.m. – 8:00 p.m. EST/EDT.

Once your company is registered with Bonfire, you will be able to securely submit your company's proposal any time before the bid deadline, at https://ocoee.bonfirehub.com by clicking the "PREPARE YOUR SUBMISSION" under the solicitation. An instructional video is provided for an overview of the submission process. Once Respondent's bid has been submitted, Respondent will receive a date/time stamp confirmation within the Bonfire platform and an email from Bonfire confirming the submission. Bids submitted on Bonfire will remain locked and inaccessible by City staff until the bid deadline. **Bidders are encouraged to allow ample time to upload and submit a bid as the system will automatically lock bids upon the bid deadline.** A virtual public bid opening will be held on the date and time indicated above. Details on how to access the virtual bid opening will be located on the City's website once available at https://www.ocoee.org/959/Public-Bid-Meetings. The actual contract award will be made by the Ocoee City Commission at a later date. Please be aware that all City Commission meetings are duly noticed public meetings and all documents submitted to the City as a part of a bid constitute public records under Florida law.

The City will receive questions regarding this ITB through the Bonfire Platform or through written inquiries directed to Olena Stokych, Purchasing Analyst, at ostokych@ocoee.org. Deadline for receipt of written inquiries will be **November 28, 2023 at 2:00 p.m., local time.** Any clarifications/changes will be made by way of written addenda only, issued by the Finance Department/Purchasing. Bidders should not contact City staff, with the exception of the Purchasing Analyst, or other City consultants for information regarding this ITB before the Bid award date. Any contact with any other member of City Staff, City Commission, or its agents during the solicitation, award, and protest period may be grounds for disqualification.

Bidders shall submit one (1) complete electronic copy, preferably in a single file, of their proposal package on the Bonfire platform. Proposal packages must be received by Bonfire no later than **2:00 p.m., local time, on December 5, 2023**. Any bid package received after the aforementioned date and time will not be accepted under any circumstances. Any uncertainty regarding the time a proposal package is received will be resolved against the bidder. It shall be the sole responsibility of the bidder to have the bid package **uploaded and submitted** on the Bonfire e-procurement platform prior to the due date and time.

File Uploads – Submission materials should be prepared in the file formats listed under Requested Information for this opportunity in the Bonfire Platform. The maximum upload file size is 1000 MB. Documents should not be embedded within uploaded files, as the embedded files will not be accessible or evaluated. All electronic files uploaded must be in a common format accessible by software programs the City uses. Those common formats are generally described as Microsoft Word (.doc or .docx), Microsoft Excel (.xls or .xlsx), Microsoft Power Point (.ppt or pptx), or Adobe Portable Document Format (.pdf). Respondents will not secure, password protect or lock uploaded files; the City must be able to open and view the contents of the file. Respondents will not disable or restrict the ability of the City to print the contents of an uploaded file. Scanned documents or images must be of sufficient quality, no less than 150 dpi, to allow for reading or interpreting the words, drawings, images or sketches. The City may disqualify any Submittal Response that does not meet the criteria stated in this paragraph.

Description of Work: All work for the project shall be constructed in accordance with the drawings and specifications prepared by City of Ocoee, Public Works Department and CPH. The proposed projects will be awarded and constructed, if an award is made, in conformance with the plans and specifications. Bids shall be deemed to include all items necessary for the furnishing, delivering, and installing of all materials, equipment, incidentals, and services, including all labor for the work which is generally described as the following:

- The W. Oakland Ave Reconstruction Project is a complete demolition and reconstruction of W. Oakland Ave between Taylor St. and S. Bluford Ave. The new roadway will consist of a two-way street divided by a 22-foot median with a 12-foot trail in the center of the median. The construction includes curb and gutter, new 12-foot asphalt roadway lanes, reconstructed stormwater system, potable water improvements, gravity sewer improvements, brick on-street parking, and 8-foot widewalks. Pipe diameters for the stormwater system include 24-inch RCP, 42-inch RCP, and 34”x53” ERCP as shown in the Drawings and listed in the Invitation to Bid. This project also includes the installation of a 6” PVC conduit for future underground power conversion. Finally, the project shall include removal of existing City utilities, roadway reconstruction, removal and replacement of driveways and curb, sidewalk, and sodding and other restoration as may be required.

- The Contractor shall furnish all labor, materials, equipment, tools, services, and incidentals to complete all work required by these Specifications and as shown on the

Drawings.

- The Contractor shall perform the work complete, in place and ready for continuous service, and shall include repairs, tie-ins, testing, permits, clean up, replacements, and restoration required as a result of damages caused during this construction.

- The Contractor shall furnish and install all incidental materials, equipment, and labor which is reasonably and properly inferable and necessary for the proper completion of the work, whether specifically indicated in the Contract Documents or not.

- The Contractor shall comply with all County, State, Federal, and other codes and regulations applicable to the above construction work.

Prospective bidders shall prepare their bids by reviewing complete, full-size contract documents. Addenda will be posted on Bonfire and transmitted to all bidders. It is be the bidder's responsibility to verify addendums and acknowledge receipt of all addenda in the bid submittal.

Pre-bid Conference: None scheduled at this time.

Bid Bond: A certified check or bid bond shall accompany each bid. The certified check or bid bond shall be for an amount not less than five percent (5%) of the bid price, and shall be made payable to the City of Ocoee as a guarantee that the Bidder will not withdraw for a period of ninety (90) days after bid closing time.

Bid Submittal: A single bid package containing the Base Bid and Bid Alternate prices shall be submitted for the work by each proposing contractor. The contract will be awarded pursuant to the requirements of applicable state and federal laws and regulations and pursuant to any applicable City of Ocoee purchasing rules and procedures and the contract documents.

Bids shall be on the bid form provided in the bidding documents. Bidders should acknowledge receipt of all addenda in the prescribed bid form. Bids must be signed by an authorized representative of the bidder. Failure to comply with either condition may be cause for bid disqualification.

CONVICTED VENDOR LIST (PUBLIC ENTITY CRIME). A person or affiliate who has been placed on the convicted vendor list following a conviction for a public entity crime may not submit a bid on an award to provide any goods or services to a public entity, may not submit a bid on an award with a public entity for the construction or repair of a public building or public work, may not submit bids on leases of real property to a public entity, may not be awarded or perform work as a Contractor, Supplier, Subcontractor, or Consultant under a award with any public entity, and may not transact business with any public entity in excess of the threshold amount provided in section 287.017 for Category Two for a period of 36 months from the date of being placed on the convicted vendor list. [See s. 287.133(2)(a), Florida Statutes.]

The City reserves the right to accept or reject any or all bids, to waive formalities, technicalities or irregularities, to request clarification of information submitted in any bid, or to re-advertise for new bids. The City may accept any item or group of items of any bid, unless the Bidder qualifies its bid by specific limitations. The City may accept one or more bids if, in the City's discretion, the City determines that it is in the City's best interest to do so.

The City reserves the right to award the contract to the Bidder which, in the City's sole discretion, is the most responsive and responsible Bidder. The City reserves the right, as an aid in determining which bid is responsible, to require a bidder to submit such additional evidence of Bidder's qualifications as the City may deem necessary, and may consider any evidence available to the City of the financial, technical, and other qualifications and abilities of a Bidder, including past performance (experience) with the City and others. The City Commission shall be the final authority in the selection of any and all bids.

City Clerk OCOEE, FLORIDA

END OF SECTION

SECTION 00100

INSTRUCTIONS TO BIDDERS ITB #24-002

TABLE OF CONTENTS

ARTICLE	DESCRIPTION
1	Defined Terms
2	Copies of Bidding Documents
3	Qualifications of Bidders
4	Examination of Contract Documents and Site
5	Availability of Lands for Work, Etc.
6	Addenda and Interpretations
7	Bid Security
8	Contract Time
9	Liquidated Damages and Indemnity
10	Substitute Material and Equipm
11	Subcontractors, Etc.
12	Bid Form
13	Submission of Bids
14	Modification and Withdrawal of Bids
15	Opening of Bids
16	Bids to Remain Open Subject to Acceptance
17	Award of Contract
18	Taxes
19	Organization of Drawings and Specifications
20	Required Disclosure
21	Qualifications of Surety Companies
22	Qualifications Submittals
23	Interpretation of Quantities
24	Drug-Free Workplace
25	Construction Safety
26	Special Warranty, Performance Bond, Insurance and Correction Period Requirements
27	Signing of Agreement
28	Bid Protests
29	Unit Prices Information
30	Licenses and Permits
31	Retainage
32	Stored Material Allowance(s)

SECTION 00100

INSTRUCTIONS TO BIDDERS

ARTICLE 1 - DEFINED TERMS

1.1 Terms used in these Instructions to Bidders that are defined in Section 01001 – General Requirements have the meanings assigned to them in that Section, as supplemented. Terms defined here for general application within the Project Manual are:

1.1.1 "Apparent low Bidder" means the Bidder submitting the lowest bid at the bid opening without correction of numerical discrepancies, consideration of alternates, or determination of responsiveness and responsibility.

1.1.2 "Bidding documents" consist of the Project Manual and related drawings, both as may be modified by addenda.

1.1.3 "Contract Documents" are described in Section 00500, Article 8, and generally include the Scope of Work Agreement (Section 00500), performance bond (Section 00610), payment bonds (Section 00620), certificates of insurance (Section 00650), Notice of Intent to Award (Section 00840), Notice to Proceed (Section 00841), General Conditions (Section 00700), Supplemental Conditions (Section 00800), the complete Project Manual (including Section 00020 – Invitation to Bid and Section 00100 – Instructions to Bidders), drawings, any addenda issued by Owner or Engineer, Contractor's bid (Section 00300), and documentation submitted by Bidder prior to the Notice of Intent to Award being issued.

1.1.4 "Contractor" refers to the corporation, firm, or person who is authorized to undertake the work.

1.1.5 "Engineer" refers to the City Engineer of the City of Ocoee, or his designee, who shall act as Owner's representative and serves as project engineer for all decisions and actions requiring action by "Engineer."

1.1.6 "Owner" is the City of Ocoee, Florida.

1.1.7 "Owner's representative" is the Public Works Director of the City of Ocoee or his designee.

1.1.8 "Project Manual" refers to the complete document set, including "Engineering Standards Manual," issued by Owner, as may be amended, not including the drawings, and consisting of Divisions 0 through 4, inclusive.

1.1.9 "Purchasing Analyst" for this project is Olena Stokych, Finance Department/Purchasing, City of Ocoee, ostokych@ocoee.org.

1.1.10 "Successful Bidder" means the Bidder to whom Owner awards or expects to award the contract. The apparent low Bidder is not necessarily the successful Bidder.

1.2 The work, as defined in Section 00500 – Scope of Work Agreement, is governed by the requirements of Section 00700 – General Conditions and Section 00800 – Supplemental Conditions.

ARTICLE 2 - COPIES OF BIDDING DOCUMENTS

2.1 Prospective respondents may secure a copy of the documents required for submitting a proposal at no charge through Bonfire by accessing the City's published solicitation page at https://ocoee.bonfirehub.com. Neither Owner nor Engineer assumes any responsibility for errors or misinterpretations resulting from the use of an incomplete set of bidding documents.

2.2 Complete sets of bidding documents shall include 11" x 17" drawings.

2.3 Owner, in making copies of the bidding documents available on the above terms, does so only for the purpose of obtaining bids on the work and does not confer a license or grant for any other use.

ARTICLE 3 - QUALIFICATIONS OF BIDDERS

Each Bidder shall complete the questionnaire (Section 00301) included in the Bid Form. To demonstrate qualifications to perform the work, each Bidder must be prepared to submit, within seven (7) days of Owner's request, the additional qualifications submittals set forth in Article 22 of the Instructions to Bidders.

ARTICLE 4 - EXAMINATION OF CONTRACT DOCUMENTS AND SITE

4.1 It is the responsibility of each Bidder before submitting a bid to: (a) examine thoroughly the Contract Documents and other related data identified in the bidding documents; (b) visit the site to become familiar with the general and local conditions that may affect cost, progress, performance, or furnishing of the work; (c) consider federal, state, and local laws and regulations that may affect cost, progress, performance, or furnishing of the work; (d) study and carefully correlate Bidder's knowledge and observations with the Contract Documents and such other related data; and (e) promptly notify Purchasing Analyst of all conflicts, errors, ambiguities, or discrepancies that Bidder has discovered in or between the Contract Documents and such other related documents or conditions prior to submitting a bid.

4.2 Information and data shown or indicated in the Contract Documents with respect to existing underground facilities at or contiguous to the site are based upon information and data furnished to Owner and Engineer by owners of such underground facilities or others, and Owner and Engineer do not assume responsibility for the accuracy or completeness thereof.

4.3 Contractor shall perform exploratory excavations for the purpose of locating underground pipelines, conduits, cables or structures in advance of the construction.

4.4 Before submitting a bid, each Bidder will be responsible for obtaining such additional or supplementary examinations, investigations, explorations, tests, studies, and data concerning conditions (surface, subsurface, and underground facilities) at or contiguous to the site or otherwise, which may affect cost, progress, performance, or furnishing of the work, or which

relate to any aspect of the means, methods, techniques, sequences, or procedures of construction to be employed by Bidder, and safety precautions and programs incident thereto or that Bidder deems necessary to determine its bid for performing and furnishing the work in accordance with the time, price, and other terms and conditions of the Contract Documents.

4.5 Each Bidder has access to the public portions of the construction area to conduct such examinations, investigations, explorations, tests, and studies as each Bidder deems necessary for submission of a bid. Bidder must fill all holes and clean up and restore the site to its former condition upon completion of such explorations, investigations, tests, and studies.

4.7 The submission of a bid will constitute an incontrovertible representation by Bidder that Bidder has complied with every requirement of this Article 4; that without exception the bid is premised upon performing and furnishing the work required by the Contract Documents and applying the specific means, methods, techniques, sequences or procedures of construction (if any) that may be shown or indicated or expressly required by the Contract Documents; that Bidder has given Purchasing Agent written notice of all conflicts, errors, ambiguities, and discrepancies that Bidder has discovered in the Contract Documents and the written resolutions thereof by Purchasing Agent are acceptable to Bidder; and that the Contract Documents are generally sufficient to indicate and convey understanding of all terms and conditions for performing and furnishing the work.

4.8 The submission of the Bid shall be an indication that the Bidder has considered normal local weather conditions (daily and monthly variations) and accounted for these circumstances in the preparation of the bid and schedule of construction.

ARTICLE 5 - AVAILABILITY OF LANDS FOR WORK, ETC.

5.1 The lands upon which the work is to be performed, rights-of-way and easements for access thereto, and other lands designated for use by Contractor in performing the work are identified in the Contract Documents. All additional lands and access thereto required for temporary construction facilities, construction equipment, or storage of materials and equipment to be incorporated in the work are to be obtained and paid for by Contractor. Easements for permanent structures or permanent changes in existing facilities are to be obtained and paid for by Owner unless otherwise provided in the Contract Documents.

5.2 Each Bidder is instructed to fully acquaint himself or herself with the status of easement acquisitions by the Owner at the time of submission of his or her bid and the possibility that additional parcels may remain to be acquired. The Contractor shall sequence and schedule the work to delay schedule impacts caused by un-acquired easements so as not to interfere with the progress of the work in other areas of the Project. The Owner shall not be liable for any damage that may occur to the Contractor for any and all delay through delay of the Owner in securing the necessary right-of-way. The Owner agrees that it shall make every effort to acquire such easements, if any, with all reasonable speed and diligence.

ARTICLE 6 - ADDENDA AND INTERPRETATIONS

6.1 Bidders shall promptly notify Purchasing Analyst of any ambiguity, inconsistency, or error that they may discover upon examination of the bidding documents or the site before submitting a Bid.

6.2 All questions about the meaning or intent of the bidding documents shall be submitted to Purchasing Analyst in writing at Owner's address or by e-mail to ostokych@ocoee.org. Bidders shall not contact other City staff, members of the City Commission, or City agents or consultants before the award date with reference to this Invitation to Bid. **Any contact with other members of City staff, the City Commission, or their agents or consultants during the bid, award, and protest period may be grounds for Bidder disqualification.**

6.3 Submitted questions and their replies considered relevant to other Bidders, if any, shall be published through addenda posted on Bonfire no later than twenty-four (24) hours before bid time. **Questions received less than seven (7) calendar days prior to the date for opening of bids may not be answered.** Only questions answered by formal written addenda shall be binding. Prospective Bidders are warned that no source other than formal written addenda is authorized to give information supplementing, explaining, or interpreting the Bidding Documents. Failure of any Bidder to receive any such addendum or interpretation shall not relieve such Bidder from its terms and requirements.

6.4 Owner reserves the right to suspend, cancel, or postpone bid opening without prior notice in response to emergencies, loss of funds, and other unexpected conditions. An addendum will be published at the earliest reasonable opportunity notifying bidders of such an event and the time of any new bid opening date.

ARTICLE 7 - BID SECURITY

7.1 Bid security shall be submitted in the form of a cashier's check/certified check or company check upon an incorporated bank or trust company **or** a Bid Bond made payable to Owner in an amount not less than five percent (5%) of the Bidder's contract price. A combination of any of the former is not acceptable. Cash will not be accepted as Bid Security. Any bid bond submitted shall be issued by a surety company having a registered agent in the State of Florida and meeting the requirements of Article 21 of this section and Article 5 of the General Conditions.

7.2 The bid security of any Bidder whom Owner believes to have a reasonable chance of receiving the award will be retained by Owner until the City and successful bidder have executed the contract for work or until the ninety-first (91st) day after the bid opening, whichever is earlier. Bid security, in the form of a cashier's check, of other Bidders will be returned approximately thirty (30) days after the bid opening. Bid security, in the form of a bid bond, will be returned upon request following the same criteria as the cashier's check. The bid security of the successful Bidder shall be retained until such Bidder has executed the Agreement and furnished the required payment and performance bonds, whereupon the bid

security shall be returned. If the successful Bidder fails to furnish the required qualifications or submittals; or fails to execute and deliver the Agreement and furnish the required bonds within ten (10) days of the Notice of Award, Owner may rescind the Notice of Award and the bid security of that Bidder shall be forfeited.

7.3 A copy of the bid security is to be included with the proposal submitted electronically on Bonfire. The original bid security is to be mailed within five (5) business days after the bid opening to: City of Ocoee, Finance Department/Purchasing, Attention: Olena Stokych, Purchasing Analyst, 1 North Bluford Avenue, Ocoee, FL 34761. Failure to provide the original may cause your bid to be deemed non-responsive.

ARTICLE 8 - CONTRACT TIME

The number of consecutive calendar days within which, or the date by which, the work is to be completed (the Contract Time) is set forth in the Scope of Work Agreement (Section 00500).

ARTICLE 9 - LIQUIDATED DAMAGES AND INDEMNITY

9.1 Provisions for liquidated damages are set forth in the Scope of Work Agreement (Section 00500, Article 3).

9.2 The liquidated damages amount of Section 00500 has been established in accordance with the Florida Department of Transportation's *Standard Specifications for Road and Bridge Construction*, 2004 Edition, and supplements and revisions thereto.

ARTICLE 10 - SUBSTITUTE MATERIAL AND EQUIPMENT

The work, if awarded, shall be awarded on the basis of material and equipment described in the drawings or given in the specifications with consideration of possible substitute items identified by the reference, "or equal." Whenever it is indicated in the drawings or stated in the specifications that a substitute item of material or equipment may be furnished or used by Contractor, if acceptable to Owner's representative, then application for such acceptance shall not be considered by Owner's representative until after the effective date of the Agreement. If a substitution list is provided as part of the prescribed Base Bid Form, Bidders must identify proposed substitute materials. These substitute materials and equipment shall be evaluated after the effective date of the Agreement. Only the proposed alternatives and substitution items listed on the Substitution List shall be evaluated by the Owner's representative. The cost of changes in related work and/or production of additional drawings that may be required to illustrate or define the alternate equipment and its relationship to the other parts or portions of the work shall be paid by Contractor. No change shall be made in the amount of time in which to complete the work or in the liquidated damages. If the proposed substituted material or equipment is found to be unacceptable to the Owner's representative as an "equal" item, then the base bid material or equipment named in the specification or the bid form (circled item) shall be furnished by the Contractor.

ARTICLE 11 - SUBCONTRACTORS, ETC.

11.1 Each bid must identify the names and addresses of the subcontractors listed in the bid form titled, "Subcontractor/Supplier List (Section 00301-A)." If requested by the Purchasing Agent, the Bidder, and any other Bidder so requested, shall, within seven (7) days after the date of the request, submit to Owner an experience statement with pertinent information as to similar projects and other evidence of qualification for each such subcontractor, person, and organization. If Owner or its representative, after due investigation, has reasonable objection to any proposed subcontractor, other person, or organization, then Owner may, before giving the Notice of Award, request Bidder to submit an acceptable substitute without an increase in contract price or contract time. If the Bidder declines to make any such substitution, Owner may elect not to award the work to such Bidder. A Bidder's declining to make any such substitution shall not constitute grounds for sacrificing his bid security. No Bidder shall be required to employ any subcontractor, other person, or organization against whom Bidder has reasonable objection.

11.2 Procedures for approval of other subcontractors after execution of the Agreement are through written submittal to and approval by Owner's representative.

11.3 No more than <u>thirty percent (30%)</u> of the dollar value of the total bid amount for the work shall be performed by subcontractors, excluding supplying of material. The balance of the work must be accomplished by the Bidder's own forces. Each Bidder must complete the bid form titled, "Subcontractor/Supplier List" (Section 00301-A) listing each item of work to be subcontracted and the estimated not-to-exceed cost of these items. (Work in this respect does not include cost paid to suppliers for materials and equipment furnished for this project.)

ARTICLE 12 - BID FORM

12.1 The Bid form may not be completed in pencil. All entries on the Bid form shall be legible. The City reserves the right, but does not assume the obligation, to ask a Bidder to clarify an illegible entry on the Bid form. If the Bid form requires that the Bid price, or constituent portions of the Bid price, be stated in unit prices and total price; the unit prices and the total price for the stated number of units identified on the Bid form should be provided by the Bidder and be correctly computed. If there is an arithmetical conflict, between the unit price stated by the Bidder on the Bid form and the total price stated by the Bidder on the Bid form, the unit price stated by the Bidder on the Bid form shall take precedence. The City may unilaterally correct such arithmetical conflict on the Bid form to calculate the total price, utilizing the unit prices that have been identified by the Bidder. The taking of such action by the City shall not constitute grounds for the Bidder to withdraw its bid nor shall it provide a defense constituting discharge of the bid bond. The City reserves the right, but does not assume the obligation, to waive any mistake, omission, error or other irregularity that may appear on the Bid form. However, the City reserves the right to reject as non-responsive Bid forms that are incomplete or contain information that is not required.

12.2 Bids by corporations must be executed in the corporate name by the president or a vice-president (or other corporate officer, if accompanied by evidence of authority to sign) and the corporate seal must be affixed and attested by the secretary or an assistant secretary of the corporation. The corporate address and state of incorporation must be shown below the signature. If requested, the person signing a bid for a corporation or partnership must produce evidence satisfactory to Owner of the person's authority to bind the corporation or partnership. If the Bidder is a corporation, and if the bid is executed by someone other than the President or Vice President of the corporation, attach to the bid a certified copy of corporate resolutions of the board of directors of the corporation authorizing the person to execute the bid on behalf of the corporation.

12.3 Bids by partnerships must be executed in the partnership's name and signed by a partner, whose title must appear under the signature. The official address of the partnership must be shown below the signature.

12.4 All names and titles must be typed or printed below the signature.

12.5 The bid shall contain an acknowledgment of receipt of all addenda (the numbers of which shall be indicated on the bid form).

12.6 The Bidder's address to which communications regarding the bid are to be directed must be shown.

12.7 Evidence of authority to conduct business in the State of Florida as an out-of-state corporation shall be provided in accordance with Paragraph 12.2, above. Florida contractor's license number, if any, must also be shown.

12.8 Bids must be priced on a lump-sum basis for the base contract and include a separate price for each line item, as provided in the bid form. Some line items on the bid form are for unit prices with a bid quantity stated. The actual installed quantity may differ, with the unit price being multiplied by the actual number of units required. However, the Owner reserves the right to renegotiate the unit price whenever the installed quantity is significantly different from the bid quantity. In this context, "significantly different" is defined as being of sufficient magnitude so as to alter the price basis of the materials and/or services supplied to the Contractor, either up or down, for the line item.

12.9 The bid price shall include such amounts as the Bidder deems proper for overhead and profit on all line items. There is no additional line item on the bid form for these elements of the total price.

12.10 Bids that are incomplete or conditional, or that contain additions not called for, alterations, or irregularities of any kind, may be rejected.

12.11 Indemnification shall be incidental to the contract and no direct pay shall be made for indemnification.

12.12 The bid price for Mobilization/Demobilization may not exceed five percent (5%) of the total bid price less this bid item.

ARTICLE 13- SUBMISSION OF BIDS

13.1 The City utilizes Bonfire, an e-procurement platform. The City is ONLY accepting electronic solicitation responses online through the City's Bonfire platform at https://ocoee.bonfirehub.com. This link can also be accessed through the City's website at https://www.ocoee.org/323/Purchasing under the Current Open Solicitations menu. All responses for this bid MUST be submitted through the Bonfire platform. Submissions received in any other format will not be accepted; no paper, fax, or e-mailed submissions will be accepted. There is no charge to use the Bonfire electronic bid submission platform.

13.2 Each bid must contain the forms as stated in Section 300.

13.3 More than one bid received for the same work from an individual, firm, partnership, corporation, or association under the same or different names shall not be considered. Reasonable grounds for believing that any Bidder is interested in more than one bid for the same work shall cause the rejection of all such bids in which the Bidder has an interest. If there are reasonable grounds for believing that collusion exists among the Bidders, the bids of participants in such collusion shall not be considered.

ARTICLE 14 - MODIFICATION AND WITHDRAWAL OF BIDS

14.1 Bids may be modified or withdrawn by an appropriate document duly executed (in the manner that a bid must be executed) and delivered to the place where bids are to be submitted at any time prior to the deadline for submitting bids. A request for withdrawal or a modification must be in writing and signed by a person duly authorized to do so; and, in case it is signed by a deputy or subordinate, the principal's proper written authority to such deputy or subordinate must accompany the request for withdrawal or modification. Withdrawal of a bid shall not prejudice the rights of a Bidder to submit a new bid prior to the bid date and time. After expiration of the period for receiving bids, no bid may be withdrawn, modified, or explained.

14.2 Within twenty-four (24) hours after bids are opened, any Bidder may withdraw its bid and the bid security shall be returned, provided that Owner is not materially prejudiced, and the Bidder files a duly signed written notice with Owner. Any such withdrawal is conditioned on Bidder demonstrating within forty-eight (48) hours to the reasonable satisfaction of Owner that: (a) there has been a material and substantial mistake in the preparation of the bid; (b) the mistake is of such great consequence that to enforce the bid would be unconscionable; and (c) the mistake occurred notwithstanding the exercise of reasonable care in the preparation of the bid.

14.3 Following the 24-hour period during which a bid may be withdrawn as a result of one of the three causes noted above in Section 14.2, bids may not be withdrawn without being subject to the loss of bid security, regardless of the cause, including the discovery of a mistake resulting from Owner's correcting bid item prices and/or the total bid price.

ARTICLE 15 - OPENING OF BIDS

15.1 Except for bids that are facially or patently non-responsive, bids shall be opened publicly and read aloud at the time and place indicated in the Invitation to Bid (Section 00020).

15.2 Owner reserves the right to suspend, cancel, or postpone bid opening without prior notice in response to emergencies, loss of funds, and other unexpected conditions. An addendum will be published at the earliest reasonable opportunity notifying bidders of such an event and the time of any new bid opening date.

15.3 An abstract (tabulation) of the amounts of the bids received will be prepared by the Owner and made available to all Bidders within ten (10) days of the bid opening. Owner reserves the right to modify the bid abstract at any time subsequent to posting in order to reflect issues that may arise up to the time of award.

ARTICLE 16 - BIDS TO REMAIN OPEN SUBJECT TO ACCEPTANCE

16.1 All bids shall remain open for delivery by Owner of the Notice of Award for ninety (90) calendar days after the day of the bid opening.

16.2 Extensions of time when bids shall remain open beyond the ninety (90) day period may be made only by mutual agreement between Owner, the Bidder, and the surety, if any, for the Bidder.

ARTICLE 17 - AWARD OF CONTRACT

17.1 To the extent permitted by applicable state and federal laws and regulations and Owner's purchasing rules and procedures, Owner reserves the right to reject any or all bids, including, without limitation, the right to reject any or all nonconforming, non-responsive, unbalanced, or conditional bids and to reject the bid of any Bidder if Owner believes that it would not be in the best interest of the project to make an award to that Bidder, whether because the bid is not responsive, the Bidder is unqualified or of doubtful skill or ability, the Bidder fails to meet any other pertinent standard or criteria established by Owner, or the bid is irregular. Bids may be considered irregular and subject to rejection if they show serious omission, unauthorized alterations of form, unauthorized alternate bids, incomplete or unbalanced unit prices, excessive loading of project costs on fixed-cost (lump sum) components of the work, or other irregularities of any kind. Owner also reserves the right to waive all informalities not involving price, time, or changes in the work, and to negotiate contract terms with the Bidder. (Discrepancies between the multiplication of units of work and unit prices will be resolved in favor of the unit prices.) (Discrepancies between the indicated sum of any

column of figures and the correct sum thereof will be resolved in favor of the correct sum.) Bids may be corrected or rejected by Owner at any time prior to award.

17.2 Invited Alternate Bids, if any, that are determined by Owner, in its sole discretion, to be acceptable may be considered in determining the lowest responsive and responsible Bidder.

17.3 The Owner shall award the contract pursuant to applicable law. Owner specifically reserves the right to award the contract to a Bidder other than the lowest responsive Bidder when, in Owner's sole discretion, Owner determines that action to be in its best interests. Owner, in its sole discretion, reserves the right to reject any and all bids and to waive any informality concerning bids whenever such rejection or waiver is in the best interest of Owner. If all bids exceed the amount of funds estimated by Owner to be available to finance the project, Owner may reject all bids. The Owner reserves the right to rescind any award of a contract if anticipated funding for the project becomes unavailable. The ability of a Bidder to obtain a performance and payment bond shall not be regarded as the sole test of such Bidder's competency or responsibility. Nothing contained herein shall place a duty upon Owner to reject bids or award a contract based upon anything other than its sole discretion, as described herein. By submitting a bid, Bidder recognizes and accepts that Owner may reject the bid based upon the exercise of Owner's sole discretion, and Bidder waives any claim it might have for damages or other relief resulting from the rejection of its bid based on these grounds.

17.4 Owner may consider the qualifications and experience of subcontractors proposed for those portions of the work for which the identity of subcontractors must be submitted in conformance with Articles 11 and 22 of these Instructions to Bidders (Section 00100).

17.5 In evaluating bids, Owner will consider the qualifications and references of the Bidders; and the prescribed requirements, bid alternates, unit prices, and other information, as may be requested in the Bid Form or by other means prior to the Notice of Award. Owner may conduct such investigations as Owner deems necessary to assist in the evaluation of any bid and to establish the responsibility, qualifications, and ability of Bidders, proposed subcontractors, and other persons and organizations to perform the work in accordance with the Contract Documents within the prescribed time to Owner's satisfaction. Owner reserves the right to reject the bid of any Bidder that does not pass any such evaluation to Owner's satisfaction.

17.6 The responsive Bidder must complete the bid schedule for the contemplated work. Owner intends to award one (1) contract, if any award is made, to the lowest responsible and responsive Bidder. The successful Bidder shall be required to perform the work as a prime contractor. No assignment of the contract shall be allowed without the prior written permission of Owner.

17.7 If a contract is to be awarded, Owner will give the successful Bidder a Notice of Intent to Award not later than ninety (90) days after the date of the bid opening.

ARTICLE 18 - TAXES

Contractor shall pay all applicable sales, consumer, use, and other similar taxes required by law. Contractor shall comply with all applicable federal, state, and local requirements.

ARTICLE 19 - ORGANIZATION OF DRAWINGS AND SPECIFICATIONS

Drawings and specifications for the work are incorporated as:

19.1 Project Manual, consisting of Division 0 - Bidding and Contract Requirements, Division 1 - General Requirements, and Division 2 – Site Construction, Division 3 – Appendix A, Division 4 – Miscellaneous Forms.

19.2 Drawings, separately bound and with the title, "ITB #24-002 W. Oakland Ave Reconstruction."

19.3 Technical specifications may also be reflected or identified on the Drawings.

ARTICLE 20 - REQUIRED DISCLOSURE

20.1 Any contractor submitting a bid in response to this invitation must execute form PUR. 7068, SWORN STATEMENT UNDER SECTION 287.133(3)(A), FLORIDA STATUTES, ON PUBLIC ENTITY CRIMES, including proper check(s), in the space(s) provided, and enclose it with his or her bid. The required disclosure form (Section 00482) must be completed by the appropriate individual within the organization, include a notarized signature of an authorized person, and be provided with the Bid. Corrections to the form will not be allowed after the bid opening time and date. Failure to complete this form in every detail and to submit it with the bid may result in disqualification.

20.2 Owner has the sole discretion to reject any Bidder whose present or former employees, officers, directors, stockholders, partners, or owners are found by Owner to lack high standards of honesty, integrity, or responsibility. The discretion of Owner may be exercised based on the disclosure required herein, Owner's own investigation, public records, or any other reliable sources of information. Owner may also reject any Bidder failing to make the disclosure required herein. By submitting a bid, Bidder recognizes and accepts that Owner may reject the bid based upon the exercise of its sole discretion and Bidder waives any claim it might have for damages or other relief resulting from the rejection of its bid based on these grounds.

ARTICLE 21 - QUALIFICATIONS OF SURETY COMPANIES

In order to be acceptable to Owner, a surety company issuing bid guaranty bonds, or 100 percent performance/ payment bonds, or 25 percent maintenance bonds called for in the bidding documents shall meet and comply with the following minimum standards:

21.1 Surety company shall comply with the provisions of s. 255.05, Florida Statutes.

21.2 Surety companies executing bonds must appear on the United States Treasury Department's most current list (Circular 570, as amended).

21.3 Attorneys-in-fact who sign bid bonds or performance/payment bonds must file with such bond a certified copy of their power of attorney to sign such bond.

21.4 Agents of surety companies must list their name, address, and telephone number on all bonds.

21.5 Surety shall have at least the following minimum ratings:

CONTRACT AMOUNT		BEST'S RATINGS
to 50,000	Class IV	B+ or better
50,000 to 500,000	Class V	A or better
500,000 to 2,500,000	Class VI	A or better
2,500,000 and over	Class VII	A or better

RATINGS SCHEDULE (net worth of bonding company)

Class IV	3,750,000 to 5,000,000
Class V	7,500,000 to 12,500,000
Class VI	25,000,000 to 50,000,000
Class VII	75,000,000 to 100,000,000

21.6 All bonds must be provided on the forms contained in the bidding documents. Failure to provide bonds on Owner's forms may result in the rejection of the bid and the forfeiture of the bid security.

ARTICLE 22 - QUALIFICATIONS SUBMITTALS

22.1 It is the intention of Owner to award this contract to a Bidder competent to perform and complete the work in a satisfactory manner. Accordingly, Owner shall require the successful Bidder to submit prior to award of any contract: (a) evidence of Bidder's certification and license to perform the work and services; (b) experience statement; (c) a preliminary progress schedule; (d) a preliminary schedule of values; and (e) such business references as may be required to evaluate the Bidder’s performance on work of a similar nature.

22.2 The experience statement shall provide data additional to that information provided in the bid form pertaining to Contractor's adequacy of plant and equipment, organization, and prior experience. Owner may specifically request certain items to be addressed in the experience statement.

22.3 The preliminary progress schedule shall consist of three copies of a diagram and a narrative prepared in accordance with the formats set forth in Paragraph 2.05 of Project Manual Section 00700 – General Requirements for an initial work schedule and written narrative. (Note that the preliminary progress schedule is only prepared in a manner consistent with the initial work schedule; it does not constitute the initial work schedule, which is prepared within twenty-one (21) days following contract execution.) Activities in the diagram shall show the order in which the Bidder proposes to perform the work within the constraints and sequencing conditions set forth in the specification and shall indicate starting and completion dates for key milestones and work pertaining to each division of the specifications within each major structure or geographical area of work. Activities shall further identify significant submittals/approvals, major deliveries, testing, Owner's responsibilities, and responsibilities of affected utilities and other similarly involved third parties. The preliminary progress schedule shall not replace, but serve as a basis for, the progress schedule submittals to be developed later in conformance with the requirements of Paragraph 2.07 of Project Manual Section 00700 – General Requirements.

22.4 It is assumed that the schedule of values under which progress payments and change order negotiations will be based is the same as the bid prices. If this is not the case, the preliminary schedule of values shall consist of an itemization of the unit-price bid items listed in the bid form. It may also modify lump-sum items when the nature of the work changes to such a degree as to affect that part of the project.

22.5 The successful Bidder and its surety, if any, hereby agree that any delays within Bidder's control in the delivery of these qualifications submittals shall constitute a request by Bidder for an extension of the time during which the bid shall remain open for Owner's acceptance. Should Owner agree to such extension, Bidder shall be required to comply with this submittal requirement within five (5) additional days. At Owner's option, failure by the successful Bidder to deliver these qualifications submittals within the extended period shall void evaluation of the bid and shall constitute proof that the successful Bidder has abandoned his bid, the Bidder’s bid security may be declared forfeited to Owner as liquidated damages, and the work may be awarded to another Bidder.

22.6 If, upon receipt and evaluation of the submittals, the successful Bidder does not pass the evaluations to Owner's satisfaction, Owner reserves the right to reject the bid.

ARTICLE 23 - INTERPRETATION OF QUANTITIES

In the case of unit-price items, the quantities of work to be done or materials to be furnished, as identified in the bid form provided in the bidding documents, are to be considered as approximate only and are to be used solely for the comparison of bids received. The Owner and/or its representative do not expressly, or by implication, represent that the actual quantities involved shall correspond exactly therewith; nor shall the Bidder plead misunderstanding or deception because of such estimate or quantities or of the character, location, or other conditions pertaining to the work. Payment to the Contactor shall be made only for the actual quantities of work performed or material furnished in accordance with the Drawings and other Contract Documents, and it is understood that

the quantities may be increased or decreased, as provided in the General Conditions, without, in any way, invalidating any of the unit or lump-sum prices bid, provided that the parties may negotiate changes to unit prices under the provisions of Section 12.8, above.

ARTICLE 24 - DRUG-FREE WORKPLACE

Provide a certification on the form provided (Section 00303) indicating whether the Bidder has implemented a drug-free workplace program pursuant to the requirements of Section 287.087, Florida Statutes. Preference in the award process shall be given, according to the statutory requirements, to a business that certifies it has implemented a drug-free workplace program.

ARTICLE 25 - CONSTRUCTION SAFETY

25.1 In instances where such is applicable due to the nature of the work matter with which this bid is concerned, all materials, equipment, etc., as proposed and offered by Bidders must meet and conform to all Occupational Safety and Health Act (OSHA) requirements. The Bidders' signature upon the bid form (Section 00300) is considered certification of conformance to such requirements.

25.2 In the event this contract requires trench excavation, the requirements of Florida Statutes 553.60, et seq., shall be adhered to by all Bidders and acknowledged on Form 00302. All costs associated with complying with these requirements shall be included in the offered price for any applicable bid item(s).

ARTICLE 26 - SPECIAL WARRANTY, PERFORMANCE BOND, INSURANCE, AND CORRECTION PERIOD REQUIREMENTS

Detailed requirements pertaining to warranty, performance bond, insurance, and the correction period are described elsewhere in the bidding documents. Bidders are hereby notified that, in the event of an overpayment to Contractor as a result of an error on the part of either party in the preparation and/or processing of change orders, invoices, or other documents affecting the cost of the work, Contractor will refund any such overpaid amount within ten (10) calendar days of notification by Owner via certified U.S. mail of the overpayment. This obligation of Contractor is not limited to the term of the construction project.

ARTICLE 27 - SIGNING OF AGREEMENT

27.1 When Owner gives a Notice of Intent to Award to the successful Bidder, Owner will provide one (1) unsigned Agreement and all other Contract Documents shall accompany it. Within ten (10) days of receipt, successful Bidder shall sign and deliver the Agreement to Owner together with the required bonds, insurance certificates, and endorsements. Owner must be satisfied with regard to the submitted documents prior to its execution of the Agreement. In addition, the award is contingent upon action of the City Commission of the City of Ocoee, at which time the Mayor of the City of Ocoee may be authorized to sign the Agreement.

Within ten (10) days after Owner signs the Agreement, Owner shall deliver a fully signed copy of the Agreement to the successful Bidder (Contractor).

27.2 A successful Bidder that is awarded the work and fails to execute the Agreement or furnish the required bonds or insurance certificates and endorsements within the period specified in Paragraph 27.1, above, shall have its Notice of Intent to Award rescinded and shall forfeit its bid security to Owner as liquidated damages for its failure to enter into a contract with Owner.

ARTICLE 28 - BID PROTESTS

All Bid Protests shall be submitted in the following manner to the Purchasing Analyst at ostokych@ocoee.org with a copy to the Procurement Manager at jtolbert@ocoee.org:

28.1 A Bidder **shall** file a written bid protest under this Article or be barred any relief; oral protests shall not be acknowledged.

28.2 A bid protest **shall** be limited to the following grounds: (a) issues arising from the procurement provisions of the Project Manual, its addenda, and other bidding documents; and/or (b) applicable federal, state, or local law. No bid protest may be based upon questions concerning the design documents (drawings and specifications). The Bidder shall clarify all questions concerning the design documents of the project prior to submitting its bid.

28.3 The content of the bid protest **shall** fully state the factual and legal grounds for the protest and the legal basis for the relief requested.

28.4 The bid protest **shall** be filed with the Purchasing Analyst and Procurement Manager not later than three (5) calendar days after the posting of the notice of intent to award or recommendation of award by staff, whichever is earlier.

28.5 The Purchasing Analyst, on behalf of the Owner, shall make a determination of the merits of the protest not later than five (5) business days after receipt of the protest. If Owner denies the protest, Owner may proceed with award of the contract unless enjoined by order of a court of competent jurisdiction.

ARTICLE 29 - UNIT PRICES INFORMATION

29.1 Within thirty (30) days after the effective date of the Agreement, the Contractor shall submit a detailed list of unit prices (schedule of values) to be used as a basis to negotiate change orders, if such prices are proposed to differ from the unit prices included in the Bid Form. Otherwise, the bid unit prices will be used for change orders, subject to the provisions of Section 12.8, above. The successful Bidder shall submit a detailed breakdown of unit costs for performing additional work or deleting work of the types requested by Owner or Owner's representative.

29.2 The information supporting the proposed unit prices proposed in a schedule of values shall be submitted in sufficient detail to allow comprehensive analysis and review, shall show all "Cost of the Work," as defined in Article 11 of the General Conditions (Section 00700), and shall be in accordance with generally accepted accounting principles and applicable government regulations. Owner and the appropriate State agency(ies) shall have the right to audit these costs.

29.3 If Owner accepts such proposed unit prices, in whole or in part, they shall be binding on the Contractor for change orders to the extent of such acceptance and subject to any ancillary terms and conditions such as escalation clauses. However, if the Owner rejects all or any portion of such proposed unit prices, the parties shall rely on the provisions of Article 11 of the General Conditions (Section 00700), as supplemented, for changes in contract price (to the extent of such rejection). Owner may accept or reject such unit prices at its sole discretion.

ARTICLE 30 - LICENSES AND PERMITS

30.1 The contractor shall obtain and pay for all necessary building permits and all right-of-way utilization permits utilizing an allowance provided in the bid schedule (see Division 1 – General Requirements of the bidding documents). **However, any permit required from the City of Ocoee shall be provided by Owner without payment of the usual and customary fee.**

30.2 The contractor shall obtain and pay for all other federal, state, and county permits, licenses, and other authorizations required for the prosecution of the work, including the cost of all work performed in compliance with the terms and conditions of such permits, licenses, and authorizations, whether by itself or others.

ARTICLE 31 - RETAINAGE

Provisions concerning retainage and contractors' rights to deposit securities in lieu of retainage are set forth in the Proposed Scope of Work Agreement, Section 00500.

ARTICLE 32 – STORED MATERIAL ALLOWANCE

Provisions concerning stored material allowances are set forth in Sections 00710 & 01025.

END OF SECTION

SECTION 00200

INFORMATION AVAILABLE TO BIDDERS

1. Utilities: The location and existence of such utilities has not been verified by the Owner or Engineer. The contractor is responsible to verify all existing utilities located within the right-of-ways. If conflict(s) arise requiring modification of the project elements, the contactor's compensation will be based on adjusted unit quantities as measured in-place. The Contractor shall identify and verify the location of all existing utilities and preserve as necessary, applicable existing utilities required to be preserved under The Contract, whether shown on the Drawings or not. If the Contractor encounters utility conflicts during construction, the Contractor shall give sufficient notice to the Owners so that they may make the necessary adjustments. Damage to any utilities that is caused by carelessness of the Contractor shall be repaired at the Contractor's expense. Any delays ensuing from this damage shall be considered a delay that is within the Contractor's control.

2. Permits: The Contractor shall obtain all necessary building permits and all right-of-way utilization permits from City of Ocoee. However, any permit required from the City of Ocoee shall be provided by Owner without payment of the usual and customary fee. The Contractor shall obtain and pay for all other federal, state, and county permits, licenses, and other authorizations required for the prosecution of the Work, including the cost of all Work performed in compliance with the terms and conditions of such permits, licenses, and authorizations, whether by himself or others. The Contractor shall strictly adhere to the specific conditions or requirements of all such permits issued by the governmental unit(s) or agency(ies) having jurisdiction over the Work. Whenever there is a difference in the requirements of a jurisdictional body and these Specifications, the more stringent shall apply.

3. SJRWMD Permit Exemption will be provided prior to notice to proceed commencement.

4. Field Trailer: No field trailer is required for the contract.

5. Bid Form for W. Oakland Ave Reconstruction: The enclosed Bid Form is a Unit Item bid form with Eighty (80) items. The Contractor's Bid Bond shall be five percent (5%) of the total of the Bid Form.

6. W. Oakland Avenue Reconstruction Plan Dated October 16, 2023

7. Bechtol Engineering Preliminary Geotechnical Report No. G17175

8. Duke Energy Conduit Plan with Customer Guide for Installation

END OF SECTION

SECTION 00300

BID FORM

SUBMITTED: _____
(Date)

PROJECT IDENTIFICATION: CITY OF OCOEE BID

ITB #24-002 W. Oakland Ave Reconstruction

NAME OF BIDDER:_____

BUSINESS ADDRESS: _____PHONE NO.: _____
CITY, STATE, ZIP: _____

CONTRACTOR'S FEDERAL I.D. NUMBER _____

CONTRACTOR'S FLORIDA LICENSE NO.: _____

THIS BID IS SUBMITTED TO: City of Ocoee, Florida (hereinafter called Owner)

1. The undersigned Bidder proposes and agrees, if this Bid is accepted, to enter into an Agreement with Owner in the form included in the Contract Documents to perform and furnish all Work, as specified or indicated in the Contract Documents for the Contract Price and within the Contract Time indicated in this Bid Form and in accordance with the other terms and conditions of the Contract Documents.

2. Bidder accepts all of the terms and conditions of the Bidding Documents, including, without limitation, those dealing with the disposition of Bid Bond. This Bid will remain open for ninety (90) calendar days after the day of Bid opening. Bidder will sign and deliver the required number of counterparts of the Amendment to the Agreement with the Bonds and other documents required by the Bidding Requirements within ten (10) days after the date of Owner's Notice of Intent to Award.

3. In submitting this Bid, Bidder makes all representations required by the Instructions to Bidders and the Agreement and further warrants and represents that:

   a. Bidder has examined copies of all the Bidding Documents and of the following Addenda:

No. _____ Dated _____ No. _____ Dated: _____
No. _____ Dated _____ No. _____ Dated: _____
No. _____ Dated _____ No. _____ Dated: _____
No. _____ Dated _____ No. _____ Dated: _____

(Receipt of all which is hereby acknowledged) and also copies of the Invitation for Bids and the Instructions to Bidders.

b. Bidder has familiarized itself with the nature and extent of the Contract Documents, work, site, locality, and all local conditions and laws and regulations that in any manner may affect cost, progress, performance or furnishing the Work.

c. Bidder has carefully studied all reports of explorations and tests of subsurface conditions at or contiguous to the site and all drawings of physical conditions in or relating to existing surface of subsurface structures at or contiguous to the site (except Underground Facilities) which have been identified in the Supplementary Conditions, as provided in paragraph 4.02.1 of the General Conditions. Bidder accepts the determination set forth in paragraph SC-4.02 of the Supplementary Conditions of the extent of the "technical data" contained in such reports and drawings upon which Bidder is entitled to rely, as provided in paragraph 4.02 of the General Conditions. Bidder acknowledges that such reports and drawings are not Contract Documents and may not be complete for Bidder's purposes. Bidder acknowledges that Owner and Engineer do not assume responsibility for the accuracy or completeness of information and data shown or indicated in the Bidding Documents with respect to Underground Facilities at or contiguous to the site.

d. Bidder has obtained and carefully studied (or assumes responsibility for having done so) all such additional or supplementary examinations, investigations, explorations, tests, studies and data concerning conditions (surface, subsurface and Underground Facilities) at or contiguous to the site or otherwise which may affect cost progress, performance or furnishing of the Work, or which relate to any aspect of the means, methods, techniques, sequences and procedures of construction to be employed by Bidder and safety precautions and programs incident thereto. Bidder does not consider that any additional examinations, investigations, explorations, tests, studies or data are necessary for the determination of this Bid for performance and furnishing of the Work in accordance with the times, price and other terms and conditions of the Contract Documents.

e. Bidder understands the full extent and scope of Work to be performed by Owner and others at the site that relates to Work for which this Bid is submitted.

f. Bidder has correlated the information known to Bidder, information and observations obtained from visits to the site, reports and drawings identified in the Contract Documents and all additional examinations, investigations, explorations, tests, studies and date with the Contract Documents.

g. Bidder has given Engineer written notice of all conflicts, errors, ambiguities or discrepancies that Bidder has discovered in the Contract Documents and the written resolution thereof by Engineer is acceptable to Bidder, and the Contract

Documents are generally sufficient to indicate and convey understanding of all terms and conditions for performing and furnishing the Work for which this Bid is submitted.

h. This Bid is genuine and not made in the interest of or on behalf of any undisclosed person, firm or corporation and is not submitted in conformity with any agreement or rules of any group, association, organization or corporation; Bidder has not directly or indirectly induced or solicited any other Bidder to submit a farce or sham Bid; Bidder has not solicited or induced any person, firm or corporation to refrain from bidding; and Bidder has not sought by collusion to obtain for itself any advantage over any other Bidder or over Owner.

i. Bidder hereby agrees to commence Work under this contract on or before a date to be specified in the Notice to Proceed and to fully complete all work of the project within the Contract Time specified in the Scope of Work Agreement (Section 00500). Bidder further accepts the provisions of the Scope of Work Agreement as to liquidated damages and agrees to pay as liquidated damages the amount stated in the Scope of Work Agreement (Section 00500), for each consecutive calendar day completion of the Work is delayed.

Completion Schedule:

1) The Work shall be substantially complete within the Contract Time specified in Article 3.1 of the Proposed Scope of Work Agreement (Section 00500).

2) The Work shall be finally complete within the contract Time specified in Article 3.2 of the Proposed Scope of Work Agreement (Section 00500).

4. All bid items shall include all materials, equipment, labor, permit fees, taxes, tests, miscellaneous costs of all types, overhead, and profit for the item to be complete, in place, and ready for operation in the manner contemplated by the Contract Documents. Bidder submits the **TOTAL BID OR TOTAL BASE BID** to perform all the Work, as required by the Drawings and Specifications.

5. The following documents are made a condition of this Bid:

a. **Bidding Documents and shall include the following**:

1. Bid Forms (entire Section 00300, 00301, 00301A, 00302, 00303 and 00310)
2. Bid Bond (Surety Bond or Cashier's Check). (Section 00410)
3. Non-collusion Affidavit (Section 00480)
4. Conflict of Interest Disclosure (Section 00480a)
5. Certification of Non-segregated Facilities (Section 00481)
6. Sworn Statement on Public Entity Crimes (Section 00482)
7. Certification of Nondiscriminatory Labor Practices (Section 00483)
8. Certification Regarding Scrutinized Companies' List (Section 00484)

ITB #24-002 Bid Form (Page 1 of 3)					
Item No.	**Item Description**	**Quantity**	**Unit**	**Unit Price**	**Total Price**
	GENERAL				
1.01	MOBILIZATION	1	LS		
1.02	MAINTENANCE OF TRAFFIC	1	LS		
1.03	SEDIMENT BARRIER	1,678	LF		
1.04	INLET PROTECTION SYSTEM	5	EA		
1.05	CLEARING & GRUBBING	1.87	AC		
1.06	REMOVAL OF EXISTING CONCRETE	978	SY		
1.07	MAILBOX, RELOCATE	14	EA		
1.08	WEIGH SCALE REMOVAL & RESTORATION	1	LS		
1.09	REGULAR EXCAVATION	2,179	CY		
1.10	EMBANKMENT	195	CY		
1.11	TYPE B STABILIZATION (LBR40) (12")	4,050	SY		
1.12	OPTIONAL BASE GROUP 09 CRUSHED CONC. (10")	3,205	SY		
1.13	MILLING EXISTING ASPHALT PAVEMENT, 1" AVG DEPTH	207	SY		
1.14	SUPERPAVE ASHPALT CONC. TRAFFIC C, 1"	11	TN		
1.15	SUPERPAVE ASHPALT CONC. TRAFFIC C, 2"	291	TN		
1.16	INLETS, CURB, TYPE 9, P BOT <10'	8	EA		
1.17	INLETS, CURB, TYPE 9, J BOT, <10'	1	EA		
1.18	INLETS, CURB, TYPE 9, PARTIAL	1	EA		
1.19	INLETS, VALLEY GUTTER, P BOTTOM <10'	6	EA		
1.20	INLETS, VALLEY GUTTER, PARTIAL	2	EA		
1.21	MANHOLES, J-8, <10'	3	EA		
1.22	MANHOLE, ADJUST	3	EA		
1.23	PIPE CULVERT, RCP, ROUND, 24" S/CD	1,133	LF		
1.24	PIPE CULVERT, RCP, ROUND, 30" S/CD	204	LF		
1.25	PIPE CULVERT, RCP, OTHER SHAPE - ELIP/ARCH, 34"X53" S/CD	78	LF		
1.26	CURB AND GUTTER, TYPE F	1,069	LF		
1.27	CURB AND GUTTER, TYPE F, DROP CURB	681	LF		
1.28	CONCRETE CURB, TYPE B	1,798	LF		
1.29	CONCRETE CURB, TYPE D	711	LF		
1.30	CONCRETE, SIDEWALK, CURB RAMP, 4" THICK	1,858	SY		
1.31	CONCRETE, DRIVEWAYS, TRAIL, SEATING PADS, 6" THICK	1,500	SY		
1.32	PAVERS, ARCHITECTURAL, ROADWAY W/ IN-SITU INFILROMETER (6)	701	SY		
1.33	DETECTABLE WARNINGS	416	SF		
1.34	BEDDING STONE (15", NO. 57 STONE)	453	TN		

ITB #24-002 Bid Form (Page 2 of 3)					
Item No.	**Item Description**	**Quantity**	**Unit**	**Unit Price**	**Total Price**
1.35	PERFORMANCE TURF, SOD	6,436	SF		
1.36	SINGLE POST SIGN, F&I, GM, 12-20 SF	10	AS		
1.37	PAINTED PAVEMENT MARKINGS, FINAL SURFACE	1	LS		
1.38	THERMOPLASTIC, STD, WHITE, SOLID, 12"	48	LF		
1.39	THERMOPLASTIC, STD, WHITE, SOLID, 24"	104	LF		
1.40	THERMOPLASTIC, STD, WHITE, MESSAGE	2	EA		
1.41	THERMOPLASTIC, STD, OPEN GRADED, WHITE, SOLID, 6"	0.0352	GM		
1.42	THERMOPLASTIC, STD, OPEN GRADED, YELLOW, SOLID, 6"	0.0112	GM		
	UTILITIES				
2.01	REMOVE EXISTING 2" PIPE	330	LF		
2.02	REMOVE EXISTING 3" PIPE	105	LF		
2.03	REMOVE EXISTING 6" PIPE	1,125	LF		
2.04	2" PE WATER MAIN	30	LF		
2.05	4" DI WATER MAIN	295	LF		
2.06	6" DI WATER MAIN	580	LF		
2.07	8" DI WATER MAIN	382	LF		
2.08	GATE VALVE WITH BOX (6")	5	EA		
2.09	GATE VALVE WITH BOX (8")	3	EA		
2.10	TAPPING SLEEVE AND VALVE ASSEMBLY (2")	1	EA		
2.11	TAPPING SLEEVE AND VALVE ASSEMBLY (6")	2	EA		
2.12	CUT-IN CONNECTION TO EXISTING WATER MAIN	8	EA		
2.13	LINE STOP ASSEMBLY (6")	2	EA		
2.14	2" BLOW OFF ASSEMBLY	1	EA		
2.15	OFFSET AIR RELEASE VALVE ASSEMBLY (2" DIAMETER)	2	EA		
2.16	REMOVE AND SALVAGE FIRE HYDRANT	3	EA		
2.17	CLOSE, PLUG, AND ABANDON EXISTING 3" GATE VALVE	1	EA		
2.18	1" WATER SERVICE CONNECTION	12	EA		
2.19	8" PVC SAN SEWER (0-6 FT. DEEP)	308	LF		
2.20	4' DIA. SAN SEWER MANHOLE (0-6 FT. DEEP)	1	EA		
2.21	SINGLE LATERAL SERVICE (0-8 FT DEEP)	9	EA		
	LANDSCAPE & HARDSCAPE				
3.01	DECORATIVE WALL, F&I, COMPLETE	2	EA		
3.02	DECORATIVE COLUMN, F&I, COMPLETE	4	EA		
3.03	DECORATIVE BENCHES, F&I, COMPLETE	8	EA		
3.04	CONCRETE RIBBON CURB	313	LF		
3.05	LANDSCAPE IRRIGATION SYSTEM, F&I, COMPLETE	1	EA		

ITB #24-002 Bid Form (Page 2 of 3)					
Item No.	**Item Description**	**Quantity**	**Unit**	**Unit Price**	**Total Price**
3.06	MULCH	92	CY		
3.07	TREE ROOT BARRIER	2,192	LF		
3.08	CRAPE MYRTLE	23	EA		
3.09	HIGHRISE LIVE OAK	11	EA		
3.10	CABBAGE PALM	22	EA		
3.11	FIREFLY FIREBUSH	232	EA		
3.12	MRS SCHILLERS VIBURNUM	98	EA		
3.13	BABY PETE AGAPANTHUS	1,749	EA		
3.14	MUHLY GRASS	327	EA		
3.15	POWDERPUFF MIMOSA	1,802	EA		
3.16	PEACH DRIFT ROSE	180	EA		
	DUKE ENERGY ITEM				
4.01	6" PVC SCHEDULE 40 CONDUIT F&I	1,500	LF		
Total Base Bid Cost:					
Written Total Base Bid Cost:					

LEGEND: AC = Acre; AS = Assembly; CY = Cubic Yard; GM = Gross Mile; EA = Each; LF = Linear Foot; LS = Lump Sum; SY = Square Yard; TN = U.S. Ton

Company Name:_____
By:_____

Notes:
1. Pay items obtained from the Florida Department of Transportation (FDOT) Basis of Estimates (BOE) dated 2014.
2. Reference Specification Section 01025 Measurement and Payment for a detailed list of Bid Items.
3. All areas disturbed by construction are to be restored to match existing to equal or better condition.
4. The Contractor is to verify all quantities prior to BID.

7. The Bidder acknowledges that the City specifically reserves the right to accept and make an award to a Bidder that has not submitted the lowest Bid when, in Owner's sole and absolute discretion, it determines that action to be in its best interest. The terms used in this Invitation to Bid, which are defined in the General Conditions and included as part of the Contract Documents, have the meanings assigned to them in the General Conditions.

8. The work shall be performed under a Florida Underground Utility or General Contractor license. Contract shall not be awarded unless proof of valid license(s) is provided.

9. It is understood that where quantities for unit price work have been presented on the Bid Form, they are approximate only and are solely for the purpose of facilitating the comparison of bids, and that the Contractor's compensation will be computed upon the basis, described in the measurement and payment clauses in the specifications contained herein.

10. **BASE BID - SCHEDULE OF MANUFACTURERS/SUPPLIERS**

If the foregoing Schedule of Bid Items is presented in a Base Bid format, the undersigned as Bidder, agrees that the Contract, if awarded, will be on the basis of the materials and equipment named in the Contract Documents, in accordance with Article 10 of the Instructions to Bidders (Section 00100). The undersigned, as Bidder, also agrees that the Total Bid reflects the equipment and material supplied by one of the listed manufacturers/suppliers, by circling "A", "B", "C", etc. If the Bidder desires to propose an alternate manufacturer/supplier, he may write in the name of such alternate in the substitution list included within this Bid Form, but he must, nevertheless, also circle one of the listed manufacturers/suppliers. If the proposed alternate manufacturer/supplier is determined "not equivalent" by the Engineer, the Bidder must furnish equipment and/or material items by the circled manufacturer/supplier. If the Bidder fails to indicate which listed manufacturer/supplier he intends to use if an alternate is rejected, he must use the manufacturer/supplier listed as "A," or such other listed manufacturer as the City may approve. Also, if the Bidder circled more than one listed manufacturer/supplier, he must use the first manufacturer/supplier circled (unless an alternate is approved).

11. **SUBSTITUTIONS AND "OR EQUAL"**

The undersigned as Bidder agrees that substitutions, or "equal," items will not be considered until after the effective date of the Agreement and will be evaluated in accordance with paragraphs 6.05.1 and 6.05.2 of the General Conditions. In addition to the reimbursement required under the General Conditions, the Contractor shall also reimburse the Owner for any engineering costs directly attributable to the change in manufacturers/suppliers caused by the acceptance of proposed alternates, such as, additional field trips for the Engineer, additional redesign costs, additional review costs, etc. Other costs directly attributable to the change in manufacturers/suppliers caused by the acceptance of proposed alternates, such as; increased electrical requirements, larger building, additional pumps or tankage, etc., shall be borne by others and not the Owner.

If Bidder intends to propose substitutions or "equal" items after the effective date of the Agreement, it is agreed that these items must be listed on the Substitution List included within this Bid Form, with a deductive amount representing 50 percent of the total savings between the named Base Bid item and the proposed item. "Base Bid" item substitutions providing to the Owner equipment or material cost savings of less than $1,000 will not be considered. The undersigned, as Bidder, also agrees that if a substitution or "equal" item is not listed on the Substitution List included with the Bid, all of the savings between the named item and the proposed item will go to the Owner, if the Owner accepts the proposed item in accordance with paragraphs 6.05.1 and 6.05.2 of the General Conditions. The Owner may request, and the undersigned Bidder shall supply, complete information on proposed substitutions. Such information shall be the manufacturer's current published or preprinted information for the specific substitution.

12. As Bidder, I hereby certify that I am aware and understand that the City of Ocoee in its sole discretion reserves the right to waive technicalities or irregularities, to reject any or all Bids, and/or to accept that Bid which is in the best interest of the City. The award of this Bid, if made, may be based on considerations other than total cost, and may be awarded based on various considerations, including but not limited to: Bidder experience and whether the Bid, in the judgment of the City, is the most responsive to the City's needs.

SUBSTITUTION LIST

Bidder offers the following substitutions and "equal" items.

Equipment Item or Material	Spec Section	Alternative Manufacturer/Supplier (List One Only)	Deductible Amount* (Indicate Whether Lump Sum or Unit Price)

Represents 50 percent of the difference in cost in accordance with the General Conditions
(Minimum Deductible Amount per Substitution Item shall be $1,000)
(Bidder may make additional copies of this page as required.)

Strike out (X) non-applicable signature block and complete applicable block. (ALL SIGNATORIES MUST HAVE THEIR NAMES PRINTED OR TYPED BELOW THEIR SIGNATURES)
If Bidder is:

SOLE PROPRIETORSHIP

(SEAL)

(Individual's Signature)

(Individual's Name)

doing business as

Business Address:

Phone No.:

Florida License No.: _____

A PARTNERSHIP

(SEAL)

(Partnership Name)

(General Partner's Signature)

(General Partner's Name)

Business address:

Phone No.:
Florida License No.: _____

Strike out (X) non-applicable signature block and complete applicable block. (ALL SIGNATORIES MUST HAVE THEIR NAMES PRINTED OR TYPED BELOW THEIR SIGNATURES)

If Bidder is:

A CORPORATION

(Corporation Name)

(State of Incorporation)

By

(Name of person authorized to sign)

(Title)

(Authorized Signature)

(Corporate Seal)

Attest

(Secretary)

Business address:

Phone No.:

Corporation President:

Florida License No.:

Strike out (X) non-applicable signature block and complete applicable block. (ALL SIGNATORIES MUST HAVE THEIR NAMES PRINTED OR TYPED BELOW THEIR SIGNATURES)

If Bidder is:

A JOINT VENTURE

By

(Name)

(Address)

By

(Name)

(Address)

Business Address:

Phone No.:

Florida License No.:

(Each joint venturer must sign. The manner of signing for each individual, partnership, and corporation that is a party to the joint venture should be in the manner indicated above.)

Florida License No.:

13. List the following in connection with the Surety which is providing the Bid Bond:

Surety's Name: _____

Surety's Address: _____

_____

_____

14. Name and address of Surety's resident agent for service of process in Florida:

_____

_____

_____

CORPORATE AUTHORITY TO EXECUTE DOCUMENTS

I HEREBY CERTIFY that a meeting of the Board of Directors of _____ _____, a corporation under
(Contractor's Corporate Name)
the laws of the State of _____, held on the _____ day of _____, 20__, the following resolution was duly passed and adopted:

"RESOLVED, that _____ _____
(signature of individual) (typed name of individual)
as _____ of the corporation, is hereby authorized to execute and all documents required to be signed by an officer of the Corporation in order to submit a valid bid, contract and bond for

CITY OF OCOEE
ITB #24-002 W. Oakland Ave Reconstruction

between the CITY OF OCOEE, a municipal corporation, and this corporation, and that his execution thereof, attested by the Secretary of the corporation and with corporate seal affixed shall be the official act and deed of this corporation."

I FURTHER CERTIFY that said resolution is now in full force and effect.

IN WITNESS WHEREOF, I have hereunto set my hand and affixed the official seal of the corporation this _____ day of _____, 20__.
(CORPORATE SEAL)

_____ (Corporate Secretary)

STATE OF _____
CITY OF _____

The foregoing instrument was acknowledged before me this _____ day of _____, 20__ by _____
(name of officer or agent, title of officer or agent), of _____ (name of corporation acknowledging), a _____ (state or place of incorporation) corporation, on behalf of the corporation. He/She is personally known to me or has produced identification _____ (type of identification) as identification and did/did not take an oath.

_____
(Notary Public)
My Commission Expires: _____

END OF SECTION

SECTION 00301
QUESTIONNAIRE

Bidder shall fill out questionnaire form with all information pertinent to his/her company: failure of the Bidder to provide all information required in this form may cause your Bid to be deemed Non-Responsive.

DATE:_____

PROJECT IDENTIFICATION: City of Ocoee
ITB #24-002 W. Oakland Ave Reconstruction

NAME OF BIDDER:_____

BUSINESS ADDRESS:_____

TELEPHONE NO.:_____EMAIL_____

CONTRACTOR'S FLORIDA LICENSE NO._____

The undersigned warrants the truth and accuracy of all statements and answers herein contained. Include additional sheets if necessary.

1. How many years has your organization been in business licensed Florida Contractor?
_____

2. Describe and give the date and owner contat information of the last 3 (three) projects that you have completed in the last 10 (ten) years with surface and sub-surface construction elements included within the proposed project scope?
1)_____
_____
_____

2)_____
_____
_____

3)_____
_____
_____

Have you ever failed to complete work awarded to you? If so, where and why?
_____
_____

4. Name three (3) municipalities for which you have performed similar work and contact person:

_____
_____
_____

5. Have you personally inspected the site of the proposed Work? Describe any anticipated problems with the site and your proposed solutions?

_____
_____
_____

6. Will you Subcontract any part of this Work? If so, describe which portions and the percentage of the project:

_____
_____
_____
_____
_____

7. What equipment do you plan on using to complete the Work?

_____
_____
_____
_____

8. State the true and exact, correct, and complete name under which you do business.

Bidder is:_____

SECTION 00301-A

SUBCONTRACTOR & SUPPLIER LIST

Will your firm be doing all the Work with your own forces? Yes____ No____ (Check yes only if no subcontracting opportunities exist. If you will be doing portions of the Work with your own forces, list these areas and approximate dollar amount allocated for this Work. List suppliers).

List all proposed subcontractors and suppliers to be used to include company names, contractor license number, contact, addresses, phone numbers, type of work subcontracted (trade/commodity), and dollar amount of work. Provide all information requested. Use additional sheets if necessary.

Submit Update Subcontractor/Supplier List with each progress payment requested. Submit Final Subcontractor/Supplier List with Final Payment Request.

COMPANY NAME, CONTACT ADDRESS, PHONE NUMBER	WORK TO BE PERFORMED (TRADE) OR COMMODITY TO BE SUPPLIED	ESTIMATED DOLLAR AMOUNT
1		
2		
3		
4		
5		
6		
7		

END OF SECTION

SECTION 00302

COMPLIANCE WITH FLORIDA TRENCH SAFETY ACT (90-96, LAWS OF FLORIDA)

Bidder hereby acknowledges that all costs for complying with the Florida Trench Safety Act are included in the various items of the bid and in the Lump Sum Total Bid Price shown in Section 00300 - Bid Form, "Schedule of Bid Items". For informational purposes only, the bidder is required to further identify these costs in the summary below.

	Trench Safety Measure (Description)	Unit of Measure (LF, SY)	Unit (Quantity)	Unit Cost	Extended Cost
A				$	$
B				$	$
C				$	$
D				$	$
				TOTAL	$

BIDDER: _____

SIGNED: _____

BY: _____
(Print or type name)

TITLE: _____

DATE: _____

THIS IS NOT A PAY ITEM: The purpose of this form is to gather information on the costs associated with trench safety measures and to insure that the Bidder has considered these costs and included them in the Lump Sum Total Bid price. Contractor will not receive additional payment if actual quantities differ from those estimated or if the Contractor uses a safety measure different than those listed.

(Failure to Complete This Form May Result in the Bid Being Declared Non-Responsive.)

END OF SECTION

SECTION 00303

DRUG-FREE WORKPLACE CERTIFICATION

IDENTICAL TIE BIDS: Preference shall be given to businesses with drug-free workplace programs. Whenever two or more bids which are equal with respect to price, quantity, and service are received by the State or by any political subdivision for the procurement of commodities or contractual services, a bid received from a business that certifies that it has implemented a drug-free workplace program shall be given preference in the award process. Established procedures for processing tie bids will be followed if none of the tied vendors have a drug-free workplace program (Florida Statutes Section 287.037). In order to have a drug-free workplace program, a business shall:

1. Publish a statement notifying employees that the unlawful manufacture, distribution, dispensing, possession, or use of a controlled substance is prohibited in the workplace and specifying the actions that will be taken against employees for violations of such prohibition.

2. Inform employees about the dangers of drug abuse in the workplace, the business's policy of maintaining a drug-free workplace, and available drug counseling, rehabilitation, and employee assistance programs, and the penalties that may be imposed upon employees for drug abuse violations.

3. Give each employee engaged in providing the commodities or contractual services that are under bid a copy of the statement specified in subsection (1).

4. In the statement specified in subsection (1), notify the employees that, as a condition of working on the commodities or contractual services that are under bid, the employee will abide by the terms of the statement and will notify the employer of any conviction of, or pleas of guilty or *nolo contendere* to, any violation of Chapter 893 or of any controlled substance law of the United States or any state, for a violation occurring in the workplace no later than five (5) days after such conviction.

5. Impose a sanction on, or require the satisfactory participation in a drug abuse assistance or rehabilitation program is such is available in the employee's community, by any employee who is so convicted.

6. Make a good faith effort to continue to maintain a drug-free workplace through implementation of this section.

As the person authorized to sign the statement, I certify that this firm complies fully with the above requirements.

Bidder:_____

Signed:_____

By: _____
(Print or Type Name)

Title: _____

Date:_____

END OF SECTION

SECTION 00310

CONTRACTOR E-VERIFY AFFIDAVIT

I hereby certify that _____ [contractor] does not employ, contract with, or subcontract with an unauthorized alien, and is otherwise in full compliance with Section 448.095, Florida Statutes.

All employees hired on or after January 1, 2021 have had their work authorization status verified through the E-Verify system.

A true and correct copy of _____ [contractor] proof of registration in the E-Verify system is attached to this Affidavit.

_____

Print Name: _____

Date: _____

STATE OF _____

COUNTY OF _____

The foregoing instrument was acknowledged before me by means of ☐physical presence or ☐online notarization, this _____(date) by _____ (name of officer or agent, title of officer or agent) of _____ (name of contractor company acknowledging), a _____ (state or place of incorporation) corporation, on behalf of the corporation. He/she is personally known to me or has produced _____ (type of identification) as identification.

[Notary Seal]

_____

Notary Public

_____

Name typed, printed or stamped

My Commission Expires: _____

SECTION 00410
BID BOND

Bidder shall provide the City with a Bid Bond in the amount of five percent (5%) of the contract bid.

KNOW ALL MEN BY THESE PRESENTS, that we, the undersigned, _____ _____, as Principal, and _____ _____ as Surety, are hereby held and firmly bound unto the City of Ocoee, Florida, as Owner, in the penal sum of, (5 percent of the Contract Bid) $_____ _____

(written amount in dollars and cents)

for the payment of which, well and truly to be made, we hereby jointly and severally bind ourselves, successors and assigns.

Signed this _____ day of _____, 20__. The Condition of the above obligation is such that whereas the Principal has submitted to the City of Ocoee, Florida a certain Bid, attached hereto and hereby made a part hereof to enter into a contract in writing, for the Project: "ITB #24-002 W. Oakland Ave Reconstruction."

NOW THEREFORE

1. Bidder and Surety, jointly and severally, bind themselves, their heirs, executors, administrators, successors and assigns to pay to Owner upon default of Bidder any damages, costs, or expenses, including attorney's fees, incurred by Owner that are proximately caused by such default. In no event shall Bidder's and Surety's obligation hereunder exceed the penal sum set forth on the face of this Bond.

2. Default of Bidder shall occur upon the failure of Bidder to deliver within the time required by the Bidding Documents (or any extension thereof agreed to in writing by Owner) the executed Agreement required by the Bidding Documents and any performance and payment bonds required by the Bidding Documents and Contract Documents.

3. This obligation shall be null and void if:

   3.1 Owner accepts Bidder's bid and Bidder delivers within the time required by the Bidding Documents (or any extension thereof agreed to in writing by Owner) the executed Agreement required by the Bidding Documents and any performance and payment bonds required by the Bidding Documents and Contract Documents, or

   3.2 All bids are rejected by Owner, or

   3.3 Owner fails to issue a Notice of Intent to Award to Bidder within ninety (90) days from the time and date fixed for the opening of Bids (or any extension thereof agreed to in writing by Bidder and, if applicable, consented to by Surety when required by paragraph 5 hereof).

4. Payment under this Bond will be due and payable upon default by Bidder and within 30 calendar days after receipt by Bidder and Surety of written notice of default from Owner, which notice will be given with reasonable promptness, identifying this Bond and the Project and including a statement of the amount due.

5. Surety waives notice of and any and all defenses based on or arising out of any time extension to issue notice of award agreed to in writing by Owner and Bidder, provided that the total time for issuing notice of award including extensions shall not in the aggregate exceed 120 days from Bid Due Date without Surety's written consent.

6. No suit or action shall be commenced under this bond prior to 30 calendar days after the notice of default required in paragraph 4 above is received by Bidder and Surety and in no case later than one year after Bid Due Date.

7. Any suit or action under this Bond shall be commenced only in a court of competent jurisdiction located in the state in which the Project is located.

8. Notices required hereunder shall be in writing and sent to Bidder and Surety at their respective addresses shown on the face of this Bond. Such notices may be sent by personal delivery, commercial courier or by United States Registered or Certified Mail, return receipt requested, postage pre-paid, and shall be deemed to be effective upon receipt by the party concerned.

9. Surety shall cause to be attached to this Bond, a current and effective Power of Attorney evidencing the authority of the officer, agent or representative who executed this Bond on behalf of Surety to execute, seal and deliver such Bond and bind the Surety thereby.

10. This Bond is intended to conform to all applicable statutory requirements. Any applicable requirement of any applicable statute that has been omitted from this Bond shall be deemed to be included herein as if set forth at length. If any provision of this Bond conflicts with any applicable provision of any applicable statute, then the provision of said statute shall govern and the remainder of this Bond that is not in conflict therewith shall continue in full force and effect.

11. The term "bid" as used herein includes a bid, offer, or proposal as applicable.

IN WITNESS WHEREOF, the Principal and the Surety have hereunto set their hands and seals, and such of them as are corporations have caused their corporate seals to be hereto affixed and these presents to be signed by their proper officers, the day and year first set forth above.

BIDDER:	Strike out (X) non-applicable signature blocks and complete applicable block. All signatures must have their names printed or type below their signature.

If Bidder is **SOLE PROPRIETORSHIP**, complete this signature block.	
_____ (Individual's Signature) _____ (Individual's Signature) doing business as _____ _____ (Business Address) _____ _____ (Telephone No.) (Florida License No.)	(1) _____ (Witness) (2) _____ (Witness) **(SEAL)**

If Bidder is **PARTNERSHIP**, complete this signature block.	
_____ (Partnership Name) _____ (General Partner's Signature) _____ (General Partner's Name) _____ (Business Address) _____ _____ (Telephone No.) (Florida License No.)	(1) _____ (Witness) (2) _____ (Witness) **(SEAL)**

If Bidder is **CORPORATION,** complete this signature block.	
_____ (Corporation Name) _____ (State of Incorporation) By:_____ (Name of Person Authorized to Sign - See Note 1) _____ (Title) _____ (Authorized Signature) _____ (Corporation President) _____ (Business Address) _____ _____ (Telephone No.) (Florida License No.)	(1) _____ (Witness) (2) _____ (Witness) **(SEAL)**

SURETY

_____ (Surety Business Name)	Witness: (If agency is not a Corporation) (1) _____ (Witness)
_____ (Principal Place of Business)	(2) _____ (Witness)
By:_____ (Surety Agent's Signature - See Note 2)	Attest: (If Agency is a Corporation)
_____ (Surety Agent's Name)	_____ (Corporate Secretary Signature)
_____ (Surety Agent's Title)	_____ (Corporate Secretary Name)
_____ (Business Name of Local Agent for Surety)	(Corporate Seal)
_____ (Business Address)	
_____ _____ (Telephone No.) (Bond No.)	

NOTES:

(1) Complete and attach "Corporate Authority to Execute Documents" if executed by any corporate employee other than president or vice-president.

(2) Complete and attach a certified copy of "Power-of-Attorney" prepared by Surety appointing individual "Attorney-in-Fact" for execution of Bid Bond on behalf of Surety and corresponding notarized "Attorney-in-Fact".

(3) Above addresses are to be used for giving required notice.

(4) Any singular reference to Bidder, Surety, Owner or other party shall be considered plural where applicable.

(5) Surety companies executing bonds must appear on the Treasury Department's most current list (Circular 570 as amended) and be authorized to transact business in the state where the project is located.

ATTORNEY-IN-FACT AFFIDAVIT

STATE OR COMMONWEALTH OF_____)

COUNTY OR CITY OF _____)

Before me, a Notary Public, personally came _____ known to me, and known to be the Attorney-in-Fact of _____, a _____ Corporation, which (Surety Company) (State)

executed the attached bond as surety, who deposed and said that his signature and the corporate seal of said

_____ were affixed by order and authority of said Company's Board of Directors, (Surety Company)

and that the execution of the attached bond is the free act and deed of _____.
(Surety Company)

Given under my hand and seal this _____ day of _____, 20_ .

_____
(Notary Public)

My Commission Expires _____.

END OF SECTION

SECTION 00480

NON-COLLUSION AFFIDAVIT

STATE OF_____)

COUNTY OF_____)

_____, being first duly swore deposes and says:

1. He (it) is the _____
(Owner, Partner, Office, Representative or Agent)
of _____ , the Bidder that has submitted the attached Bid;

2. He is fully informed respecting the preparation and contents of the attached Bid and of all pertinent circumstances respecting such Bid;

3. Such Bid is genuine and is not a collusive or sham Bid;

4. Neither the said Bidder nor any of its officers, partners, owners, agents, representatives, employees, or parties in interest, including this affidavit, have in any way, colluded, conspired, connived or agreed, directly or indirectly, with any other Bidder, firm or person to submit a collusive or sham Bid in connection with the Contract for which the attached Bid has been submitted; or to refrains from bidding in connection with such Contract; or have in any manner, directly or indirectly, sought by agreement or collusion, or communication, or conference with any Bidder, firm, or person to fix the price or prices in the attached Bid or of any other Bidder, or to fix any overhead, profit, or cost elements of the Bid price or the Bid price in any other Bidder, or to secure through any collusion, conspiracy, connivance, or unlawful agreement any advantage against (Recipient), or any person interested in the proposed Contract;

5. The price or prices quoted in the attached Bid are fair and proper and are not tainted by any collusion, conspiracy, connivance, or unlawful agreement on the part of the Bidder or any other of its agents, representatives, owners, employees or parties in interest, including this affidavit.

By: _____

Title: _____

Sworn to (or affirmed) and subscribed before me by means of ☐ physical presence or ☐ online notarization, this ____ day of _____, 20 , by _____ in the state of _____ County of _____.

_____
Notary Public

My Commission Expires: _____

END OF SECTION

ITB#24-002 BID CONFLICT OF INTEREST DISCLOSURE FORM

The award of this contract is subject to the provisions of Chapter 112, Florida Statutes. All Bidders must disclose within their Bid: the name of any City of Ocoee employee, Mayor or City Commissioner, other City Official, or City Consultants, who owns assets or capital stock, directly or indirectly, in the Bidder's firm or any of its branches, or would directly or indirectly benefit by the profits or emoluments of this Bid. (Indirect ownership or benefit applies to any members of his or her immediate family.) Bidder certifies that no member of the entity's ownership or management is presently applying for an employee position or actively seeking an elected position with the City. In the event that a conflict of interest is identified in the provision of services, Bidder agrees to immediately notify the City in writing.

The purpose of this disclosure form is to give the City the information needed to identify potential conflicts of interest for the City Commission, Staff, and other key City employees and consultants involved in the award and administration of this contract.

According to Chapter 112, Florida Statutes, the term "conflict of interest" "means a situation in which regard for a private interest tends to lead to disregard of a public duty or interest", and refers to situations in which financial or other personal considerations may adversely affect, or have the appearance of adversely affecting, an employee's professional judgment in exercising any City duty or responsibility in administration, management, instruction, research, or other professional activities.

Please check one of the following statements and attach additional documentation if necessary:

_____ To the best of our knowledge, the undersigned firm has no potential conflict of interest for this Bid.

_____ The undersigned firm, by attachment to this form, submits information which may be a potential conflict of interest for this Bid.

Acknowledged by:

_____
Firm Name

_____
Signature

_____
Name and Title (Print or Type)

_____
Date

SECTION 00481
CERTIFICATION OF NONSEGREGATED FACILITIES

The Bidder certifies that he does not maintain or provide for his employees any segregated facilities at any of his establishments, and that he does not permit his employees to perform their services at any location, under this control, where segregated facilities are maintained. The Bidder certifies further that he will not maintain or provide for his employees any segregated facilities at any of his establishments, and that he will not permit his employees to perform their services at any location under his control where segregated facilities are maintained. The Bidder agrees that a breach of this certification will be a violation of the Equal Opportunity clause in any contract resulting from acceptance of this Bid. As used in this certification, the term "segregated facilities" means any waiting rooms, work areas, restrooms and washrooms, restaurants and other eating areas, time clocks, locker rooms and other storage and dressing areas, parking lots, drinking fountains, recreation or entertainment area, transportation, and housing facilities provided for employees on the basis of race, color, religion, or national origin, because of habit, local custom, or otherwise. The Bidder agrees that (except where he has obtained identical certification from proposed subcontractors for specific time periods) he will obtain identical certifications from proposed subcontractors prior to the award of subcontracts exceeding $10,000 which are not exempt from the provisions of the Equal Opportunity clause, and that he will retain such certifications in his files.
The nondiscriminatory guidelines as promulgated in Section 202, Executive Order 11246, and as amended by Executive Order 11375 and as amended, relative to Equal Opportunity for all persons and implementations of rules and regulations prescribed by the United States Secretary of Labor are incorporated herein.

Note:

The penalty for making false statements in offers is prescribed in 18 U.S.C. 1001.

Date _____, 20___. _____

By: _____

_____
(Title)

Official Address (including Zip Code):

_____

_____

ATTACH AND INCLUDE AS PART OF PROPOSAL FORM; FAILURE TO DO SO MAY BE CAUSE FOR DISQUALIFICATION OF YOUR BID.

END OF SECTION

SECTION 00482
(Page 1 of 2)

SWORN STATEMENT UNDER SECTION 287.133(3)(a), FLORIDA STATUTES, ON PUBLIC ENTITY CRIMES

THIS FORM MUST BE SIGNED IN THE PRESENCE OF A NOTARY PUBLIC OR OTHER OFFICER AUTHORIZED TO ADMINISTER OATHS.

1. This sworn statement is submitted to City of Ocoee, Florida by_____by

   _____.
   (Print individual's Name & Title)

   whose business address is _____

   _____

2. I understand that a "public entity crime" as defined in Paragraph 287.133(1)(g), Florida Statutes, means a violation of any state or federal law by a person with respect to and directly related to the transaction of business with any public entity or with an agency or political subdivision of any other state or with the United States, including, but not limited to, any bid or contract for goods or services to be provided to any public entity or an agency or political subdivision of any other state or of the United States and involving antitrust, fraud, theft, bribery, collusion, racketeering, conspiracy, or material representation.

3. I understand that "convicted" or "conviction" as defined in Paragraph 287.133(1)(b), Florida Statutes, means a finding of guilt or a conviction of a public entity crime, with or without an adjudication of guilt, in any federal or state trial court of record relating to charges brought by indictment or information after July 1, 1989, as a result of a jury verdict, non-jury trial, or entry of a plea of guilty or nolo contendere.

4. I understand that an "affiliate" as defined in Paragraph 287.133(1)(a), Florida Statutes, means:

   a. A predecessor or successor of a person convicted of a public entity crime: or

   b. An entity under the control of any natural person who is active in the management of the entity and who has been convicted of a public entity crime. The term "affiliate" includes those officers, directors, executives, partners, shareholders, employees, members, and agents who are active in the management of an affiliate. The ownership by one person of shares constituting a controlling interest in another person, or a pooling of equipment or income among persons when not for fair market value under an arm's length agreement, shall be a *prima facie* case that one person controls another person. A person who knowingly enters into a joint venture with a person who has been convicted of a public entity crime in Florida during the preceding 36 months shall be considered an affiliate.

5. I understand that a "person" as defined in Paragraph 287.133(1)(e), Florida Statutes, means any natural person or entity organized under the laws of any state or of the United States with the legal power to enter into a binding contract and which bids or applies to bid on contracts for the provision of goods or services let by a public entity, or which otherwise transacts or applies to transact business with a public entity. The term "person" includes those officers, directors, executives, partners, shareholders, employees, members, and agents who are active in management of an entity.

6. Based on information and belief, the statement I have marked below is true in relation to the entity submitting this sworn statement. (please indicate which statement applies).

_____Neither the entity submitting this sworn statement, or one or more of its officers, directors, executives, partners, shareholders, employees, members, or agents who are active in management of the entity, nor any affiliate of the entity have been charged with and convicted of a public entity crime subsequent to July 1, 1989.

_____The entity submitting this sworn statement, or one or more of the officers, directors, executives, partners, shareholders, employees, members, or agents who are active in management of the entity, or an affiliate of this entity has been charged with and convicted of a public entity crime subsequent to July 1, 1989.

_____The entity submitting this sworn statement, or one or more of the officers, directors, executives, partners, shareholders, employees, members, or agents who are active in management of the entity, or an affiliate of this entity has been charged with and convicted of a public entity crime subsequent to July 1, 1989. However, there has been a subsequent proceeding concerning the conviction before a Hearing Officer of the State of Florida, Division of Administrative Hearings. The final order entered by the Hearing Officer determined that it was not in the public interest to place the entity submitting this sworn statement on the convicted vendor list. (Please attach a copy of the final order.)

I UNDERSTAND THAT THE SUBMISSION OF THIS FORM TO THE CONTRACTING OFFICER FOR THE PUBLIC ENTITY IDENTIFIED IN PARAGRAPH 1 (ONE) ABOVE IS FOR THAT PUBLIC ENTITY ONLY AND, THAT THIS FORM IS VALID THROUGH _____ _____. I ALSO UNDERSTAND THAT I AM REQUIRED TO INFORM THE PUBLIC ENTITY PRIOR TO ENTERING INTO A CONTRACT IN EXCESS OF THE THRESHOLD AMOUNT PROVIDED IN SECTION 287.017, FLORIDA STATUTES FOR CATEGORY TWO OF CHANGE IN THE INFORMATION CONTAINED IN THIS FORM.

_____
(Signature)

Date: _____

_____
Name of Bidder (Contractor)

STATE OF _____

COUNTY OF _____

Sworn to (or affirmed) and subscribed before me by means of ☐ physical presence or ☐ online notarization, this ____ day of _____, 20 , by _____ in the state of _____ County of _____.

Notary Public _____

My Commission Expires: _____

END OF SECTION

SECTION 00483
CERTIFICATION OF NONDISCRIMINATORY LABOR PRACTICES

This certification relates to a construction contract proposed by the City of Ocoee

Equal Opportunity Employment: The Contractor shall not discriminate on the basis of race, color, national origin, gender, age, handicapped status, veteran status, and/or religion in performing the work governed by this contract. The City is an Equal Opportunity Employer (EOE) and as such encourages all contractors to comply with EOE regulations. Any subcontract the Contractor may enter into shall include this clause with the same degree of application being encouraged.

I am the undersigned prospective construction contractor or subcontractor. I certify that:

(1) I _____ have/_____ have not participated in a previous contract or subcontract subject to the Equal Opportunity Clause and

(2) if I have participated in a previous contract or subcontract subject to the Equal Opportunity Clause, I _____have/ _____ have not filed with the Joint Reporting Committee, the Director of the Office of Federal Contract Compliance Programs, or the Equal Employment Opportunity Commission all reports due under the applicable filing requirements.

I understand that, if I have participated in a previous contract or subcontract subject to the Equal Opportunity Clause and have failed to file all reports due under the applicable filing requirements, I am not eligible, and will not be eligible, to have my bid or offer considered, or to enter into the proposed contract or subcontract, unless and until I make an arrangement regarding such reports that is satisfactory to the office where the reports are required to be filed.

I agree that I will obtain identical certifications from prospective lower-tier sub-contractors when I receive bids or offers or initiate negotiations for any lower-tier construction subcontracts with a price exceeding $10,000. I also agree that I will retain such certifications in my files.

Date _____, 20___. By:_____
(Signature of Authorized Official)

_____
(Name of Prospective Construction Contractor or Subcontractor)

_____
(Address of Prospective Construction Contractor or Subcontractor)

_____ _____
(Telephone Number) (Employer Identification Number)

END OF SECTION

Certification Regarding Scrutinized Companies' Lists

The Respondent certifies that the company is not participating in a boycott of Israel. The Respondent certifies that the Respondent is not on the Scrutinized Companies that Boycott Israel List, not on the Scrutinized Companies with Activities in Sudan List, not on the Scrutinized Companies with activities in the Iran Petroleum Energy Sector List, or has been engaged in business operations in Cuba or Syria, as those terms are used and defined in sections 287.135 and 215.473 of the Florida Statutes. In the event that the Respondent is unable to provide such certification but still seeks to be considered for award of this solicitation, the Respondent shall, on a separate piece of paper, clearly state that it is on one or both of the Scrutinized Companies lists and shall furnish together with its proposal a duly executed written explanation of the facts supporting any exception to the requirement for certification that it claims under Section 287.135 of the Florida Statutes. The Respondent agrees to cooperate fully with the City in any investigation undertaken by the City to determine whether the claimed exception would be applicable. The City shall have the right to terminate any contract resulting from this solicitation for default if the Respondent is found to have submitted a false certification, or to have been placed on the Scrutinized Companies that Boycott Israel List, or to have been placed on the Scrutinized Companies for Activities in Sudan List, or the Scrutinized Companies with Activities in the Iran Petroleum Energy Sector List, or has been engaged in business operations in Cuba or Syria.

Name of Respondent:_____

By:_____
(Authorized Signature)

Title:_____

Date:_____

SECTION 00500
CONTRACT FOR CONSTRUCTION

THIS AGREEMENT is dated as of the _____ day of _____ in the year 20 , by and between the **City of Ocoee**, a Florida municipal corporation, hereinafter called Owner, and _____ a Florida corporation, hereinafter called Contractor.

Owner and Contractor, in consideration or the mutual covenants hereinafter set forth, agree as follows:

ARTICLE 1. WORK

Contractor shall complete all work as specified or indicated in the Contract Documents. The work is generally described as follows:

ITB #24-002 W. Oakland Ave Reconstruction

General Scope of Work:

In conformance with the plans and specifications for this project: furnishing, delivering, and installing of all materials, equipment, incidentals, and services, including all labor for the work which is generally described as the following:

- The W. Oakland Ave Reconstruction Project is a complete demolition and reconstruction of W. Oakland Ave between Taylor St. and S. Bluford Ave. The new roadway will consist of a two-way street divided by a 22-foot median with a 12-foot trail in the center of the median. The construction includes curb and gutter, new 12-foot asphalt roadway lanes, reconstructed stormwater system, potable water improvements, gravity sewer improvements, brick on-street parking, and 8-foot widewalks. Pipe diameters for the stormwater system include 24-inch RCP, 42-inch RCP, and 34”x53” ERCP as shown in the Drawings and listed in the Invitation to Bid. This project also includes the installation of a 6” PVC conduit for future underground power conversion. Finally, the project shall include removal of existing City utilities, roadway reconstruction, removal and replacement of driveways and curb, sidewalk, and sodding and other restoration as may be required.
- The Contractor shall furnish all labor, materials, equipment, tools, services, and incidentals to complete all work required by these Specifications and as shown on the Drawings.
- The Contractor shall perform the work complete, in place and ready for continuous service, and shall include repairs, tie-ins, testing, permits, clean up, replacements, and restoration required as a result of damages caused during this construction.

- The Contractor shall furnish and install all incidental materials, equipment, and labor which is reasonably and properly inferable and necessary for the proper completion of the work, whether specifically indicated in the Contract Documents or not.
- The Contractor shall comply with all County, State, Federal, and other codes and regulations applicable to the above construction work.
- All work must be in compliance with the City of Ocoee Engineering Standards Manual. See Section 02100. All work activities shall be required to be in accordance with the permits issued by the respective agencies. All work performed will be required to be done while maintaining the functional operation of the existing utilities.

ARTICLE 2. ENGINEER

The Project has been designed by **CPH**; however, the City Engineer (within here and other references in the contract documents as "Engineer") or his designee is to act as Owner's representative, assume all duties and responsibilities of the project engineer, and have the rights and authority assigned Director in the Contract Documents in connection with completion of the work.

ARTICLE 3. CONTRACT TIME

3.1 The work shall be Substantially complete within_____( ) calendar days in addition to any days for the city to migrate meters and the Entire work, which shall include readiness for final payment, shall be complete and ready for its intended use, including final dressing and cleanup, within _____( ) calendar days. All time periods begin from the effective date of the Notice to Proceed, as provided in paragraph 2.03 of the General Conditions (Commencement of Contract Time; Notice to Proceed).

In accordance with Florida Statutes Section §218.735, within 30 calendar days, or 45 days if over $10 million construction cost, of reaching substantial completion of the construction services, the Owner and Contractor shall work together to develop the single list of items and the estimated cost to complete each item on the list required to render complete, satisfactory, and acceptable the construction services purchased by the Owner. See also General Conditions Section 710 of the bid package, and Section 5 of the Contract, Payment Procedures.

3.2 Placing of permanent pavement markings on all final asphaltic concrete surfaces, if applicable, shall not be accomplished before thirty (30) calendar days have elapsed after placement of the final surfaces. The charging of Contract Time will be suspended during the thirty (30) calendar-day period provided the work is considered to be Substantially Complete, as provided in paragraph 3.1 above. The charging of Contract Time will resume on the 31st day.

3.3 Contractor recognizes that time is of the essence of this Agreement and that Owner will suffer financial loss if the work is not completed within the times as specified, plus any

extensions thereof allowed in accordance with the General and Supplementary Conditions. Contractor acknowledges that proving the actual loss and damages suffered by Owner if the work is not completed on time is impracticable and not susceptible to exact calculation. Accordingly, instead of requiring any such proof, Contractor agrees that as liquidated damages for delay (but not as a penalty) Contractor shall pay to the Owner for work not completed as specified paragraph 3.1 the following:

Substantial Completion: Two Hundred Dollars ($200.00) for each day
Entire Completion: Two Hundred and Fifty Dollars ($250.00) for each day

Note: Each Day(s) in this section shall be referred to as calendar day(s)

3.4 In addition to the liquidated damages, there shall be additional incidental damages paid by the Contractor to the Owner for failure to timely complete the work. These may include, but not be limited to, delay damage settlements or awards owed by Owner to others, inspection and engineering services, interest and bond expense, delay penalties, fines or penalties imposed by regulatory agencies, contract damages, and professional fees (including attorneys' fees) incurred by Owner in connection with Contractor's failure to timely complete the work.

3.5 In addition to liquidated damages and incidental damages arising from Contractor's failure to perform the work, Contractor may be required to repay Owner for the cost of corrective actions undertaken by Owner to resolve construction defects. Such corrective actions include, but are not limited to, restoration of damaged areas, clearing of reclaimed water customer facilities to remove construction debris, repair and replacement of damaged reclaimed water customer equipment, and emergency repairs to the reclaimed water distribution system during the one-year warranty period.

3.6 Suspension of Work and Termination as stated in Article 15 of the General Conditions.

ARTICLE 4. CONTRACT PRICE

4.1 Owner shall pay Contractor for performance of the work in accordance with the Contract Documents in current funds at the lump sum or unit prices presented in the Bid Form, **_____ DOLLARS AND _____ CENTS _____**, which is incorporated herein and made a part hereof by this reference.

4.2 The Contractor agrees that the Contract Price is a stipulated sum except with regard to those items in the bid which are subject to unit prices and agrees to perform all of the work as described in the Contract Documents, subject to additions and deductions by Change Order, and comply with the terms therein for the Bid stated in the attached Bid Form.

ARTICLE 5. PAYMENT PROCEDURES

Contractor shall submit applications for payment in accordance with Article 14 of the General Conditions. Applications for payment will be processed by Engineer, as provided in the General Conditions.

5.1 Progress Payments. In accordance with Section §218.735 Florida Statutes, Owner shall make progress payments on account of the Contract Price on the basis of Contractor's properly submitted and approved Applications for Payment, as recommended by Engineer, not later than the Twenty-fifth (25th) business day after the date on which the properly submitted Application for Payment is initially received by the Owner. All such progress payments will be on the basis of the progress of the work measured by the Schedule of Values established in paragraph 2.07 of the General Conditions (Initial Acceptance of Schedules) (and in the case of Unit Price, work based on the number of units completed) and included in Contractor's qualifications submittals.

5.1.1 Owner shall submit a monthly "Certificate of payment based on the provided Paid to Date Summary may withhold, in accordance with the Division 1: General Conditions (Progress Payments).

5.1.2 Progress payments shall be equal to ninety-five percent (95%) of the value of work completed to date and Ongoing Stored Material Allowance as defined in Section 01025 Measurement and Payment, to include materials and equipment not incorporated into the work but delivered and suitably stored and accompanied by documentation satisfactory to Owner, with the remaining five percent 5% of the work being retainage.

5.1.3 Retainage shall be five percent (5%) of work to date based on the progress payment, including all change orders.

5.2 Final Payment - Within 20 business days after the list is created, upon receipt of a proper invoice or Application for Payment, the Owner shall pay the contractor the remaining contract balance that includes all retainage previously withheld by the Owner less an amount equal to 150 percent of the estimated cost to complete the items on the list, less any liquidated damages. Upon completion of all items on the list, the contractor may submit a payment request for the amount withheld by the Owner. If a good faith dispute exists as to whether one or more items identified on the list have been completed pursuant to the contract, the local governmental entity may continue to withhold up to 150 percent of the total costs to complete such items. If the Owner has provided written notice to the contractor specifying the failure of the contractor to meet contract requirements in the development of the list of items to be completed, the Owner must pay the contractor the remaining balance of the contract, less any items in dispute, less an amount equal to 150 percent of the estimated cost to complete the items that the local governmental entity intended to include on the list.

ARTICLE 6. INTEREST

All monies not paid when due, as provided in Division I General Conditions, shall bear interest at the rate of 3% simple interest per annum.

ARTICLE 7. CONTRACTOR'S REPRESENTATIONS

In order to induce Owner to enter into this Agreement, Contractor makes the following representations:

7.1 Contractor has examined and carefully studied the Contract Documents (including the Addenda listed in paragraph 8) and the other related data identified in the Bidding Documents including "technical data."

7.2 Contractor has visited the site and become familiar with and is satisfied as to the general, local and site conditions that may affect cost, progress, performance and furnishings of the work.

7.3 Contractor is familiar with and is satisfied as to all federal, state, and local laws and regulations that may affect cost, progress, performance, and furnishing of the work.

7.4 Contractor has carefully studied all reports of explorations and tests of subsurface conditions at or contiguous to the site and all drawings of physical conditions in or relating to existing surface or subsurface structures at or contiguous to the site (except Underground Facilities) that are identified in Section 00200 "Information Available to Bidders".

7.5 Contractor has obtained and carefully studied (or assumes responsibility for having done so) all such additional supplementary examinations, investigations, explorations, tests, studies and data concerning conditions (surface, subsurface and Underground Facilities) at or contiguous to the site or otherwise which may affect costs, progress, performance or furnishing of the work or which relate to any aspect of the means, methods, techniques, sequences and procedures of construction to be employed by Contractor and safety precautions and programs incident thereto. Contractor does not consider that any additional examinations, investigations, explorations, tests, studies or data are necessary for the performance and furnishing of the work at the Contract Price, within the Contract Times and in accordance with the other terms and conditions of the Contract Documents.

7.6 Contractor is aware of the general nature of work to be performed by Owner and others at the site that relates to the work as indicated in the Contract Documents.

7.7 Contractor has correlated the information known to Contractor, information and observations obtained from visits to the site, reports and drawings identified in the Contract Documents and all additional examinations, investigations, explorations, tests, studies and data with the Contract Documents.

7.8 Contractor has given Engineer written notice of all conflicts, errors, ambiguities or discrepancies that Contractor has discovered in the Contract Documents and the written resolution thereof by Engineer is acceptable to Contractor, and the Contract Documents are generally sufficient to indicate and convey understanding of all terms and conditions for performance and furnishing of the work.

7.9 Contractor shall perform work with a value of not less than fifty percent (50%) of the Contract Price with his own forces.

ARTICLE 8. CONTRACT DOCUMENTS

The Contract Documents, which comprise the entire agreement between Owner and Contractor concerning the work, are attached to this Agreement, made a part hereof, and consist of the following:

8.1 This Scope of work Agreement (Section 00500).

8.2 Exhibits to this Scope of work Agreement (if any).

8.3 Performance Bond, Payment Bonds and Certificates of Insurance (Sections 00610, 00620, 00630 and 00650, respectively).

8.4 Notice of Award and Notice to Proceed.

8.5 General Conditions (Section 00710 - NSPE - ACEC Document 1910-8 (1996 Edition), as modified and supplemented.

8.6 Supplementary Conditions (Section 00800) (If Applicable).

8.7 Specific Technical Specification (Engineering Standard Manual) (Section 02100).

8.8 22.08_Customer Guide for Installing Conduit (16 pages)
Duke Energy Conduit Plan: C-101, Plan Sheet No. 14
Geotechnical Report – Bechtol Engineering (10 pages)
W. Oakland Ave Reconstruction Plan Sheets (69 pages)

8.9 Project Manual bearing the general title "**City of Ocoee, Florida, ITB #24-002 W. Oakland Ave Reconstruction**" dated _____ and consisting of Divisions 0 through 4, as listed in the Table of Contents thereof, including the Invitation to Bid (Section 00020) and Instructions to Bidders (Section 00100).

8.10 Drawings consisting of a cover sheet and the sheets bearing the following general title:

City of Ocoee
ITB #24-002 W. Oakland Ave Reconstruction

8.11 Addenda numbers __ to __, inclusive.

8.12 Contractor's Bid (Section 00300).

8.13 Documentation submitted by Contractor prior to Notice of Award.

There are no Contract Documents other than those listed above in this Article 8. The Contract Documents may only be amended, modified, or supplemented, as provided in paragraphs 3.04 of the General Conditions.

ARTICLE 9. MISCELLANEOUS

9.1 Terms used in this Agreement that are defined in Article 1 (Definitions) of the General Conditions shall have the meanings indicated in the General Conditions, as may be modified in the Supplementary Conditions.

9.2 No assignment by a party hereto of any rights under, or interests in, the Contract Documents will be binding on another party hereto without the written consent of the party sought to be bound; and specifically, but without limitation, moneys that may become due, and moneys that are due, may not be assigned without such consent (except to the extent that the effect of this restriction may be limited by law), and unless specifically stated to the contrary in any written consent to an assignment, no assignment will release or discharge the assignor from any duty or responsibility under the Contract Documents. Notwithstanding the foregoing, the Owner may assign this contract to the State of Florida or any political subdivision, municipality, special district or authority thereof without Contractor's consent and without recourse.

9.3 Owner and Contractor each binds himself, his partners, successors, assigns and legal representatives to the other party hereto, his partners, successors, assigns, and legal representatives in respect to all covenants, agreements, and obligations contained in the Contract Documents.

9.4 Chapter 558, Florida Statutes: The parties agree that the provisions of Chapter 558, Florida Statutes are not applicable to this Agreement.

9.5 Waiver of Jury Trial; Legal Costs. It is mutually agreed by and between the Contract and Owner that each of the parties do hereby waive trial by jury in any action, proceeding or claim which may be brought by either of the parties hereto against the other on any matters concerning or arising out of this Agreement. The parties further agree that the sole and exclusive venue for any action to enforce this agreement shall be in The Circuit Court of the Ninth Judicial Circuit in and for Orange County, Florida.

9.6 Any provision or part of the Contract Documents held to be void or unenforceable under any Law or Regulation shall be deemed stricken, and all remaining provisions shall continue to be valid and binding upon Owner and Contractor, who agree that the Contract Documents shall be reformed to replace such stricken provision or part thereof with a valid and enforceable provision that comes as close as possible to expressing the intention of the stricken provision.

9.7 SCRUTINIZED COMPANIES: The Respondent certifies that the company is not participating in a boycott of Israel. The Respondent certifies that the Respondent is not on the Scrutinized Companies that Boycott Israel List, not on the Scrutinized Companies

with Activities in Sudan List, not on the Scrutinized Companies with activities in the Iran Petroleum Energy Sector List, or has been engaged in business operations in Cuba or Syria, as those terms are used and defined in sections 287.135 and 215.473 of the Florida Statutes. In the event that the Respondent is unable to provide such certification but still seeks to be considered for award of this solicitation, the Respondent shall, on a separate piece of paper, clearly state that it is on one or both of the Scrutinized Companies lists and shall furnish together with its proposal a duly executed written explanation of the facts supporting any exception to the requirement for certification that it claims under Section 287.135 of the Florida Statutes. The Respondent agrees to cooperate fully with the City in any investigation undertaken by the City to determine whether the claimed exception would be applicable. The City shall have the right to terminate any contract resulting from this solicitation for default if the Respondent is found to have submitted a false certification, or to have been placed on the Scrutinized Companies that Boycott Israel List, or to have been placed on the Scrutinized Companies for Activities in Sudan List, or the Scrutinized Companies with Activities in the Iran Petroleum Energy Sector List, or has been engaged in business operations in Cuba or Syria.

9.8 **PUBLIC RECORDS COMPLIANCE**

The City of Ocoee (City) is a public agency subject to Chapter 119, Florida Statutes. The Contractor agrees to comply with Florida's Public Records Law. Specifically, the Contractor shall:

1. Keep and maintain public records required by the City to perform the service.

2. Upon request from the City's custodian of public records, provide the City with a copy of the requested records or allow the records to be inspected or copied within a reasonable time at a cost that does not exceed the cost provided in chapter 119, Florida Statutes, or as otherwise provided by law.

3. Ensure that public records that are exempt or confidential and exempt from the public records disclosure requirements are not disclosed except as authorized by law for the duration of the contract term and following completion of the contract if the Contractor does not transfer the records to the City.

4. Upon completion of the contract, Contractor agrees to transfer at no cost to the City all public records in possession of the Contractor or keep and maintain public records required by the City to perform the service. If the Contractor transfers all public record to the City upon completion of the contract, the Contractor shall destroy any duplicate public records that are exempt or confidential and exempt from public records disclosure requirements. If the Contractor keeps and maintains public records upon completion of the contract, the Contractor shall meet all applicable requirements for retaining public records. All records stored electronically must be provided to the City, upon request from the City's custodian of public records, in a format that is compatible with the information technology systems of the City.

5. A Contractor who fails to provide the public records to City within a reasonable time may be subject to penalties under section 119.10, Florida Statutes.

IF THE CONTRACTOR HAS QUESTIONS REGARDING THE APPLICATION OF CHAPTER 119, FLORIDA STATUTES, TO THE CONTRACTOR'S DUTY TO PROVIDE PUBLIC RECORDS RELATING TO THIS CONTRACT, CONTACT THE CUSTODIAN OF PUBLIC RECORDS AT 407-905-3100, EXTENSION 1022, CCDL@ci.ocoee.fl.us, WITH AN OFFICE LOCATED AT 1 NORTH BLUFORD AVENUE, OCOEE, FLORIDA 34761.

9.9 By entering into the Contract, the awarded Contractor is obligated to comply with the provisions of § 448.095, Fla. Stat., "Employment Eligibility." This includes, but is not limited to utilization of the E-Verify System to verify the work authorization status of all newly hired employees, and requiring all subcontractors to provide an affidavit attesting that the subcontractor does not employ, contract with, or subcontract with, an alien unauthorized to work in the USA. Failure to comply will lead to termination of this contract, or if a subcontractor knowingly violates the statute, the subcontractor must be terminated immediately. If the Contract is terminated pursuant to Section 448.095, Fla. Stat., such termination is not a breach of contract and may not be considered as such. Any challenge to termination under this provision must be filed in the Ninth Judicial Circuit Court of Florida no later than 20 calendar days after the date of termination. If the Contract is terminated for a violation of Section 448.095 Fla. Stat., by the Contractor, the Contractor shall be liable for any additional costs incurred by the City as a result of the termination of the Contract. Nothing in the E-Verify Certification shall be construed to allow intentional discrimination of any class protected by law.

A. Pursuant to section 448.095, Florida Statutes, Contractor shall register with and use the U.S. Department of Homeland Security's E-Verify system, https://e-verify.uscis.gov/emp, to verify the work authorization status of all Contractor employees hired on and after January 1, 2021.

B. Subcontractors

(i) Contractor shall also require all subcontractors performing work under this Agreement to use the E-Verify system for any employees they may hire during the term of this Agreement.

(ii) Contractor shall obtain from all such subcontractors an affidavit stating the subcontractor does not employ, contract with, or subcontract with an unauthorized alien, as defined in section 448.095, Florida Statutes.

(iii) Contractor shall maintain a copy of all subcontractor affidavits for the duration of the Agreement.

C. Contractor must provide evidence of compliance with section 448.095, Florida Statutes. Evidence shall consist of an affidavit from the Contractor stating all employees hired on and after January 1, 2021 have had their work authorization status verified through the E-Verify system and a copy of their proof of registration in the E-Verify system.

D. Failure to comply with this provision is a material breach of the Agreement, and shall result in the immediate termination of the Agreement without penalty to the City. Contractor shall be liable for all costs incurred by the City to secure a replacement Agreement, including but not limited to, any increased costs for the same services, any costs due to delay, and rebidding costs, if applicable.

(Remainder of page left blank intentionally.)

IN WITNESS WHEREOF, the parties hereto have signed this Agreement. All portions of the Contract Documents have been signed or identified by Owner and Contractor or by Engineer on his behalf.

CONTRACTOR: _____

BY:_____

PRINT NAME: _____

TITLE: _____

WITNESSES:

NAME:_____ NAME:_____

TITLE: _____ TITLE: _____

OWNER: CITY OF OCOEE, FLORIDA

ATTEST:

BY: _____
Melanie Sibbitt, City Clerk

(SEAL)

APPROVED:

BY: _____
Rusty Johnson, Mayor

FOR USE AND RELIANCE ONLY BY
THE CITY OF OCOEE, FLORIDA
APPROVED AS TO FORM AND LEGALITY

this ___ day of _____, _____

FISHBACK DOMINICK

BY: _____
Richard S. Geller, City Attorney

APPROVED BY CITY OF OCOEE
COMMISSION AT A MEETING HELD
on _____, under Agenda Item ___.

END OF SECTION

SECTION 00610

PERFORMANCE BOND

KNOW ALL MEN BY THESE PRESENTS that _____ _____, (hereinafter referred to as "Principal"), and _____ _____, a corporation organized under the laws of the State of _____ _____and licensed to do business in the State of _____, (hereinafter referred to as "Surety"), and held and firmly bound unto the City of Ocoee, Florida, as Obligee, (hereinafter referred to as "Obligee"), in the Penal Sum of _____, for the payment of which sum well and truly made, Principal and Surety bind themselves, their heirs, personal representatives, successors and assigns, jointly and severally, firmly by these presents.

WHEREAS, Principal has by written agreement dated _____,entered into a contract, (hereinafter referred to as the "Contract") with Obligee for the construction of _____ (hereinafter referred to as the "Project") in accordance with the plans and specifications prepared by _____, dated _____ _____; and

NOW, THEREFORE, THE CONDITIONS OF THIS OBLIGATION IS SUCH THAT IF Principal shall well and truly perform all the undertakings, covenants, terms, conditions, and agreements of said Contract including, but not limited to, the making of payments to persons or entities providing labor, materials or services to Principal under the Contract, as well as, fulfilling all warranty obligations required after the Certificate of Completion is issued, within the time provided therein, and any extensions thereof that may be granted by the Obligee, and also during the life of any warranty or guaranty required under said Contract, and shall also well and truly perform all undertakings, covenants, terms, conditions, and agreements of any and all duly authorized and modifications of said Contract that may hereafter be made, and shall pay, compensate, indemnify and save harmless the said Obligee of and from any and all loss, damage and expense, or from any breach or default by Principal under the Contract, including, but not limited to, liquidated damages, damages caused by delays in performance of the Principal, expenses, cost and attorneys' fees, including appellate proceedings, that Obligee sustains resulting directly or indirectly from failure of the Principal to perform the Work identified by the Contract, then this obligations shall be null and void; otherwise, it shall remain in full force and effect and Surety shall be liable to Obligee under this Performance Bond.

The Surety's obligations hereunder shall be direct and immediate and not conditional or contingent upon Obligee's pursuit of its remedies against Principal, and shall remain in full force and effect notwithstanding (I) amendments or modifications to the contract or contract entered into by Obligee and Principal without the Surety's knowledge or consent; (ii) waivers of compliance with or any default under the Contract granted by Obligee to Principal or by Principal to Obligee without the Surety's knowledge or consent; (iii) the discharge of Principal from its obligations under the Contract as a result of any proceeding initiated under The Bankruptcy Code of 1978, as the same may be amended, or any similar state or federal law, or any limitation of the liability of Principal or its estate as a result of any such proceedings; or (iv) any other action taken by Obligee or Principal that would, in the absence of this clause, result in the release or discharge by operation of law of the Surety from its obligations hereunder.

In the event that the Surety fails to fulfill its obligations under this Performance Bond, then the Surety shall also indemnify and save the Obligee harmless from any and all loss, damage, cost and expense, including reasonable attorneys' fees and other legal costs for all trial and appellate proceedings, resulting directly or indirectly from the Surety's failure to fulfill its obligations hereunder. This paragraph shall survive the termination or cancellation of this Performance Bond. The obligations set forth in this paragraph shall not be limited by the Penal Sum of this Bond.

Any changes in or under the Contract or the Contract and compliance or noncompliance with any formalities connected with the Contract or the Contract or the changes therein shall not affect Surety's obligations under this bond, and Surety hereby waives notice of any such changes. Further, Principal and Surety acknowledge that the Penal Sum of this bond shall increase or decrease in accordance with approved changes or modifications to the Contract.

The said Principal and the said surety agree that this bond shall inure to the benefit of all persons supplying labor and material in the prosecution of the work provided for in the said subcontract, as well as to the Obligee, and that such persons may maintain independent actions upon this bond in their own names.

IN WITNESS WHEREOF, the Principal and Surety have executed this instrument under their several seals on the _____ day of _____, 20__, the name and corporate seal of each corporate party being hereto affixed and these presents fully signed by its undersigned representative, pursuant to the authority of its governing body.

Signed, sealed and delivered
in the presence of:

_____Principal

By:_____(SEAL)

_____ (Official Title)

_____Surety

By:_____ (SEAL)

_____ (Official Title)

NOTES: If Principal and Surety are corporations, the respective corporate seal should be affixed and attached.

Surety shall execute and attach a certified copy of Power of Attorney Appointing Individual Attorney-In-Fact for execution of Performance Bond on behalf of Surety.

END OF SECTION

SECTION 00620
STATUTORY PAYMENT BOND

Bidder shall provide the City with a Statutory Payment Bond in the amount of the contract bid.

Statutory Payment Bond
Pursuant to Florida Statutes, 255.05, et seq.

KNOW ALL MEN BY THESE PRESENTS, THAT _____ (hereinafter called the "Principal"), as Principal, and _____, a corporation organized and existing under the laws of the State of _____, hereinafter called the "Surety"), as Surety, are held and firmly bound unto the City of Ocoee, Florida, (hereinafter called the "Obligee"), by bond number _____ in the sum of _____ _____ Dollars and ____Cents ($_____), for the payment of which sum well and truly to be made, the said Principal and Surety bind themselves, and their respective heirs, administrators, executors, successors and assigns, jointly and severally, firmly by these presents.

WHEREAS, the Principal has entered into a written Contract with the Obligee dated ____ _____, 20__ to perform, as Contractor, in accordance with the Contract and Contract Documents, which Contract and Contract Documents are hereby incorporated herein by reference.

NOW, THEREFORE, THE CONDITION OF THIS OBLIGATION IS SUCH, that if the Principal promptly makes payments to all claimants, as defined in Section 255.05 (1), Florida Statutes, that provide or furnish the Principal with labor, materials, or supplies, used directly or indirectly by Principal in the prosecution of the work provided for in the contract, then this obligation shall be null and void; otherwise it shall remain in full force and effect.

The Principal and the Surety agree that this Bond shall inure to the benefit of all claimants, as defined in Section 255.05 (1), Florida Statutes, that provide or furnish the Principal with labor, materials, or supplies, used directly or indirectly by Principal in the prosecution of the work provided for in said Contract, and that any such claimant may maintain an independent action upon this Bond in its own name.

The provisions of Florida Statutes, Section 255.05, et seq. are hereby incorporated herein by reference and made a part of this payment bond including, but not limited to, the notice and time limitation provisions in subsection (2). Any action instituted by a claimant under this bond for payment must be in accordance with the notice and time limitation provisions in Section 255.05 (2), Florida Statutes.

IN WITNESS WHEREOF, the above bounden parties have executed this instrument under their several seals this _____ day of _____, 20__, the name and corporate seal of each corporate party being hereto affixed and these presents duly signed by its undersigned representative, pursuant to authority of its governing body.

_____(Seal)
(Principal)

By _____
(Name & Title)

_____
(Signature)

_____
Witness or Secretary's Attestation

_____(Seal)
(Surety)

By _____
(Name & Title*)

_____
(Signature)

_____
Witness or Secretary's Attestation

*Attach Power-Of-Attorney

END OF SECTION

SECTION 00630

CONSTRUCTION PERFORMANCE AND PAYMENT BONDS

CITY OF OCOEE

ITB #24-002 W. Oakland Ave Reconstruction

I, _____, certify that I am the Secretary of the corporation named as Principal in the foregoing Construction Performance and Payment Bonds; that _____, who signed the said Bonds on behalf of the Principal, was then _____of said corporation; that I know (his, her) signature, and (his, her) signature thereto is genuine, and that said Bonds were duly signed, sealed, and attested for and in behalf of said corporation by authority of its governing body.

_____

Secretary

(Corporate Seal)

(SURETY COMPANY LETTERHEAD)

_____, 20__

Olena Stokych
Purchasing Analyst
City of Ocoee
1 North Bluford Avenue
Ocoee, FL 34761
(407) 905-3100 X1521

RE: Construction Performance and Payment Bonds
Authority to Date Bond and Power of Attorney
Bond No.: _____
Project Name: CITY OF OCOEE

ITB #24-002 W. Oakland Ave Reconstruction

Dear Ms. Stokych:

Please be advised that as Obligee on the above referenced bond executed in your behalf for the captioned project, you are hereby authorized to date the bonds and the powers of attorney concurrent with the date of the contract.

Best Regards,

_____
(Surety Company's Name)

_____
Attorney-in-Fact

City of Ocoee

END OF SECTION

SECTION 00640
WAIVER OF RIGHT TO CLAIM AGAINST
THE PAYMENT BOND (FINAL PAYMENT)
(Section 255.05)

The undersigned, in consideration of the final payment in the amount of $_____

hereby waives its right to claim against the payment bond for labor, services, or materials furnished

to ___ _____insert the name of your customer) on the job of _____

(insert name of the owner), for improvements to the following described project:

DESCRIPTION OF PROJECT:

- The W. Oakland Ave Reconstruction Project is a complete demolition and reconstruction of W. Oakland Ave between Taylor St. and S. Bluford Ave. The new roadway will consist of a two-way street divided by a 22-foot median with a 12-foot trail in the center of the median. The construction includes curb and gutter, new 12-foot asphalt roadway lanes, reconstructed stormwater system, potable water improvements, gravity sewer improvements, brick on-street parking, and 8-foot widewalks. Pipe diameters for the stormwater system include 24-inch RCP, 42-inch RCP, and 34"x53" ERCP as shown in the Drawings and listed in the Invitation to Bid. This project also includes the installation of a 6" PVC conduit for future underground power conversion. Finally, the project shall include removal of existing City utilities, roadway reconstruction, removal and replacement of driveways and curb, sidewalk, and sodding and other restoration as may be required.

- The Contractor shall furnish all labor, materials, equipment, tools, services, and incidentals to complete all work required by these Specifications and as shown on the Drawings.

- The Contractor shall perform the work complete, in place and ready for continuous service, and shall include repairs, tie-ins, testing, permits, clean up, replacements, and restoration required as a result of damages caused during this construction.

- The Contractor shall furnish and install all incidental materials, equipment, and labor which is reasonably and properly inferable and necessary for the proper completion of the work, whether specifically indicated in the Contract Documents or not.

- The Contractor shall comply with all County, State, Federal, and other codes and regulations applicable to the above construction work.

DATE _____,

_____ (Claimant)

By:_____

END OF SECTION

SECTION 00650
INSURANCE CERTIFICATE

Bidder is to provide City of Ocoee with completed Certificate Liability Insurance listing City of Ocoee as a Certificate Holder, and listing the City of Ocoee as Additional Insured.

ACORD CERTIFICATE OF LIABILITY INSURANCE

OP ID JC
FRAZE-1

DATE (MM/DD/YYYY) 11/04/04

PRODUCER

THIS CERTIFICATE IS ISSUED AS A MATTER OF INFORMATION ONLY AND CONFERS NO RIGHTS UPON THE CERTIFICATE HOLDER. THIS CERTIFICATE DOES NOT AMEND, EXTEND OR ALTER THE COVERAGE AFFORDED BY THE POLICIES BELOW.

INSURERS AFFORDING COVERAGE	NAIC #
INSURER A: AM Best Rating A- or Better	
INSURER B:	
INSURER C:	
INSURER D:	
INSURER E:	

INSURED

Contractor's Name
Address

COVERAGES

THE POLICIES OF INSURANCE LISTED BELOW HAVE BEEN ISSUED TO THE INSURED NAMED ABOVE FOR THE POLICY PERIOD INDICATED. NOTWITHSTANDING ANY REQUIREMENT, TERM OR CONDITION OF ANY CONTRACT OR OTHER DOCUMENT WITH RESPECT TO WHICH THIS CERTIFICATE MAY BE ISSUED OR MAY PERTAIN, THE INSURANCE AFFORDED BY THE POLICIES DESCRIBED HEREIN IS SUBJECT TO ALL THE TERMS, EXCLUSIONS AND CONDITIONS OF SUCH POLICIES. AGGREGATE LIMITS SHOWN MAY HAVE BEEN REDUCED BY PAID CLAIMS.

INSR LTR	ADD'L INSRD	TYPE OF INSURANCE	POLICY NUMBER	POLICY EFFECTIVE DATE (MM/DD/YY)	POLICY EXPIRATION DATE (MM/DD/YY)	LIMITS	
	X	GENERAL LIABILITY				EACH OCCURRENCE	$ 1,000,000
		X COMMERCIAL GENERAL LIABILITY				DAMAGE TO RENTED PREMISES (Ea occurence)	$ 50,000
		CLAIMS MADE X OCCUR				MED EXP (Any one person)	$ 5,000
						PERSONAL & ADV INJURY	$ 1,000,000
						GENERAL AGGREGATE	$ 2,000,000
		GEN'L AGGREGATE LIMIT APPLIES PER:				PRODUCTS - COMP/OP AGG	$ 2,000,000
		POLICY X PRO-JECT LOC					
		AUTOMOBILE LIABILITY				COMBINED SINGLE LIMIT (Ea accident)	$ 1,000,000
		X ANY AUTO				BODILY INJURY (Per person)	$
		ALL OWNED AUTOS					
		SCHEDULED AUTOS				BODILY INJURY (Per accident)	$
		X HIRED AUTOS					
		X NON-OWNED AUTOS				PROPERTY DAMAGE (Per accident)	$
		GARAGE LIABILITY				AUTO ONLY - EA ACCIDENT	$
		ANY AUTO				OTHER THAN AUTO ONLY: EA ACC	$
						AGG	$
	X	EXCESS/UMBRELLA LIABILITY				EACH OCCURRENCE	$ 1,000,000
		X OCCUR CLAIMS MADE				AGGREGATE	$ 2,000,000
							$
		DEDUCTIBLE					$
		RETENTION $					$
		WORKERS COMPENSATION AND EMPLOYERS' LIABILITY				X WC STATU-TORY LIMITS / OTH-ER	
		ANY PROPRIETOR/PARTNER/EXECUTIVE OFFICER/MEMBER EXCLUDED?				E.L. EACH ACCIDENT	$ 500,000
		If yes, describe under SPECIAL PROVISIONS below				E.L. DISEASE - EA EMPLOYEE	$ 500,000
						E.L. DISEASE - POLICY LIMIT	$ 500,000
		OTHER					
		Builders Risk				Any 1 Loc	100,000
						Any 1 Occ	1,000,000

DESCRIPTION OF OPERATIONS / LOCATIONS / VEHICLES / EXCLUSIONS ADDED BY ENDORSEMENT / SPECIAL PROVISIONS

The insurance evidenced by this certificate shall name the certificate holders as an additional insured on the General Liability & Umbrella Liability. Workers' Compensation, Employers' Liability & General Liability shall contain a Waiver of Subrogation in favor of the certificate holder. The certificate holder is added as a named insured for Builders Risk.

CERTIFICATE HOLDER

OCOEE01

City of Ocoee
150 N. Lakeshore Drive
Ocoee FL 34761-2258

CANCELLATION

SHOULD ANY OF THE ABOVE DESCRIBED POLICIES BE CANCELLED BEFORE THE EXPIRATION DATE THEREOF, THE ISSUING INSURER WILL ENDEAVOR TO MAIL 10 DAYS WRITTEN NOTICE TO THE CERTIFICATE HOLDER NAMED TO THE LEFT, BUT FAILURE TO DO SO SHALL IMPOSE NO OBLIGATION OR LIABILITY OF ANY KIND UPON THE INSURER, ITS AGENTS OR REPRESENTATIVES.

AUTHORIZED REPRESENTATIVE

ACORD 25 (2001/08)

© ACORD CORPORATION 1988

SAMPLE

STANDARD GENERAL CONDITIONS OF THE CONSTRUCTION CONTRACT

City of Ocoee

(Revised November, 2023)

Notice: This section of the Project Manual is derived and adapted from the EJCDC C-710 Standard General Conditions of the Construction Contract, Funding Agency Edition, *but has been substantially modified to conform to the needs of the City of Ocoee. The City does not represent or imply that this is an EJCDC document. Those portions included from EJCDC publications are copyrighted and subject to the terms and conditions of a license granted to the City of Ocoee for their use.*

Portions Copyright © 2002 National Society of Professional Engineers for EJCDC. All rights reserved.

TABLE OF CONTENTS

Page

Article 1 – Definitions and Terminology 5
1.01 Defined Terms 5
1.02 Terminology 8

Article 2 – Preliminary Matters 9
2.01 Delivery of Bonds and Evidence of Insurance 9
2.02 Copies of Documents 10
2.03 Commencement of Contract Times; Notice to Proceed 10
2.04 Starting the Work 10
2.05 Before Starting Construction 10
2.06 Preconstruction Conference 10
2.07 Initial Acceptance of Schedules 10

Article 3 – Contract Documents: Intent, Amending, Reuse 11
3.01 Intent 11
3.02 Reference Standards 11
3.03 Reporting and Resolving Discrepancies 11
3.04 Amending and Supplementing Contract Documents 12
3.05 Reuse of Documents 12
3.06 Electronic Data 12

Article 4 – Availability of Lands; Subsurface and Physical Conditions; Hazardous Environmental Conditions; Reference Points13
4.01 Availability of Lands 13
4.02 Subsurface and Physical Conditions 13
4.03 Differing Subsurface or Physical Conditions 14
4.04 Underground Facilities 15
4.05 Reference Points 16
4.06 Hazardous Environmental Condition at Site 16

Article 5 – Bonds and Insurance 18
5.01 Performance, Payment, and Other Bonds 18
5.02 Licensed Sureties and Insurers 18
5.03 Certificates of Insurance 18
5.04 Contractor's Liability Insurance 18
5.05 Owner's Liability Insurance 21
5.06 Property Insurance 21
5.07 Waiver of Rights 22
5.08 Receipt and Application of Insurance Proceeds 22
5.09 Acceptance of Bonds and Insurance; Option to Replace 23
5.10 Partial Utilization, Acknowledgment of Property Insurer 23

Article 6 – Contractor's Responsibilities 23
6.01 Supervision and Superintendence 23
6.02 Labor; Working Hours 23
6.03 Services, Materials, and Equipment 25
6.04 Progress Schedule 25
6.05 Substitutes and "Or-Equals" 25
6.06 Concerning Subcontractors, Suppliers, and Others 27
6.07 Patent Fees and Royalties 29
6.08 Permits 29
6.09 Laws and Regulations 29
6.10 Taxes 29

6.11 Use of Site and Other Areas 29
6.12 Record Documents 30
6.13 Safety and Protection 30
6.14 Safety Representative 31
6.15 Hazard Communication Programs 31
6.16 Emergencies 31
6.17 Shop Drawings and Samples 32
6.18 Continuing the Work 33
6.19 Contractor's General Warranty and Guarantee 33
6.20 Indemnification 34
6.21 Delegation of Professional Design Services 34

Article 7 – Other Work at the Site 35
7.01 Related Work at Site 35
7.02 Coordination 35
7.03 Legal Relationships 36

Article 8 – Owner's Responsibilities 36
8.01 Communications to Contractor 36
8.02 Replacement of Engineer 36
8.03 Furnish Data 36
8.04 Pay When Due 36
8.05 Lands and Easements; Reports and Tests 36
8.06 Insurance 36
8.07 Change Orders 36
8.08 Inspections, Tests, and Approvals 36
8.09 Limitations on Owner's Responsibilities 37
8.10 Undisclosed Hazardous Environmental Condition 37

Article 9 – Engineer's Status During Construction 37
9.01 Owner's Representative 37
9.02 Visits to Site 37
9.03 Project Representative 37
9.04 Authorized Variations in Work 40
9.05 Rejecting Defective Work 41
9.06 Shop Drawings, Change Orders and Payments 41
9.07 Determinations for Unit Price Work 41
9.08 Decisions on Requirements of Contract Documents and Acceptability of Work 41
9.09 Limitations on Engineer's Authority and Responsibilities 41

Article 10 – Changes in the Work; Claims 42
10.01 Authorized Changes in the Work 42
10.02 Unauthorized Changes in the Work 42
10.03 Execution of Change Orders 42
10.04 Notification to Surety 43
10.05 Claims 43

Article 11 – Cost of the Work; Allowances; Unit Price Work 43
11.01 Cost of the Work 43
11.02 Allowances 45
11.03 Unit Price Work 46

Article 12 – Change of Contract Price; Change of Contract Times 46
12.01 Change of Contract Price 46
12.02 Change of Contract Times 48

12.03 Delays 48

Article 13 – Tests and Inspections; Correction, Removal or Acceptance of Defective Work 49
13.01 Notice of Defects 49
13.02 Access to Work 49
13.03 Tests and Inspections 49
13.04 Uncovering Work 50
13.05 Owner May Stop the Work 50
13.06 Correction or Removal of Defective Work 50
13.07 Correction Period 50
13.08 Acceptance of Defective Work 51
13.09 Owner May Correct Defective Work 51

Article 14 – Payments to Contractor and Completion 52
14.01 Schedule of Values 52
14.02 Progress Payments 52
14.03 Contractor's Warranty of Title 55
14.04 Substantial Completion 55
14.05 Partial Utilization 55
14.06 Final Inspection 56
14.07 Final Payment 56
14.08 Final Completion Delayed 57
14.09 Waiver of Claims 57

Article 15 – Suspension of Work and Termination 58
15.01 Owner May Suspend Work 58
15.02 Owner May Terminate for Cause 58
15.03 Owner May Terminate For Convenience 59
15.04 Contractor May Stop Work or Terminate 59

Article 16 – Dispute Resolution 59
16.01 Methods and Procedures 61

Article 17 – Miscellaneous 60
17.01 Giving Notice 60
17.02 Computation of Times 60
17.03 Cumulative Remedies 60
17.04 Survival of Obligations 61
17.05 Controlling Law 62
17.06 Headings 61

Article 18 – Federal Requirements 62
18.01 Agency Not a Party 62
18.02 Contract Approval 62
18.03 Conflict of Interest 62
18.04 Gratuities 62
18.05 Audit and Access to Records 62
18.06 Small, Minority and Women's Businesses 63
18.07 Anti-Kickback 63
18.08 Clean Air and Pollution Control Acts 63
18.09 State Energy Policy 63
18.10 Equal Opportunity Requirements 63
18.11 Restrictions on Lobbying 64
18.12 Environmental Requirements 64

GENERAL CONDITIONS

ARTICLE 1 – DEFINITIONS AND TERMINOLOGY

1.01 *Defined Terms*

A. Wherever used in the Bidding Requirements or Contract Documents and printed with initial capital letters, the terms listed below will have the meanings indicated which are applicable to both the singular and plural thereof. In addition to terms specifically defined, terms with initial capital letters in the Contract Documents include references to identified articles and paragraphs, and the titles of other documents or forms.

1. *Addenda* – Written or graphic instruments issued prior to the opening of Bids which clarify, correct, or change the Bidding Requirements or the proposed Contract Documents.

2. *Agency* – The Federal or state governmental agency named as such in the Agreement, which in this instance is the City of Ocoee. .

3. *Agreement* – The written instrument which is evidence of the agreement between Owner and Contractor covering the Work.

4. *Application for Payment* – The form acceptable to Engineer which is to be used by Contractor during the course of the Work in requesting progress or final payments and which is to be accompanied by such supporting documentation as is required by the Contract Documents.

5. *Asbestos* – Any material that contains more than one percent asbestos and is friable or is releasing asbestos fibers into the air above current action levels established by the United States Occupational Safety and Health Administration.

6. *Bid* – The offer or proposal of a Bidder submitted on the prescribed form setting forth the prices for the Work to be performed.

7. *Bidder* – The individual or entity who submits a Bid directly to Owner in accordance with the Bidding Documents.

8. *Bidding Documents* – The Bidding Requirements and the proposed Contract Documents (including all Addenda). This may include the Invitation To Bid and the Instructions to Bidders

9. *Bidding Requirements* – The Advertisement or Invitation to Bid, Instructions to Bidders, bid security of acceptable form, if any, and the Bid Form with any supplements.

10. *Change Order* – A document recommended by Engineer which is signed by Contractor and Owner and Agency and authorizes an addition, deletion, or revision in the Work or an adjustment in the Contract Price or the Contract Times, issued on or after the Effective Date of the Agreement.

11. *Claim* – A demand or assertion by Owner or Contractor seeking an adjustment of Contract Price or Contract Times, or both, or other relief with respect to the terms of the Contract. A demand for money or services by a third party is not a Claim.

12. *Contract* – The entire and integrated written agreement between the Owner and Contractor concerning the Work. The Contract supersedes prior negotiations, representations, or agreements, whether written or oral.

13. *Contract Documents* – Those items so designated in the Agreement. Only printed or hard copies of the items listed in the Agreement are Contract Documents. Approved Shop Drawings, other Contractor's submittals, and the reports and drawings of subsurface and physical conditions are not Contract Documents.

14. *Contract Price* – The moneys payable by Owner to Contractor for completion of the Work in accordance with the Contract Documents as stated in the Agreement (subject to the provisions of Paragraph 11.03 in the case of Unit Price Work).

15. *Contract Times* – The number of days or the dates stated in the Agreement to: (i) achieve Milestones, if any, (ii) achieve Substantial Completion; and (iii) complete the Work so that it is ready for final payment as evidenced by Engineer's written recommendation of final payment.

16. *Contractor* – The individual or entity with whom Owner has entered into the Agreement.

17. *Cost of the Work* – See Paragraph 11.01.A for definition.

18. *Drawings* – That part of the Contract Documents prepared or approved by Engineer which graphically shows the scope, extent, and character of the Work to be performed by Contractor. Shop Drawings and other Contractor submittals are not Drawings as so defined.

19. *Effective Date of the Agreement* – The date indicated in the Agreement on which it becomes effective, but if no such date is indicated, it means the date on which the Agreement is signed and delivered by the last of the two parties to sign and deliver.

20. *Engineer* – The individual or entity named as such in the Agreement.

21. *Field Order* – A written order issued by Engineer which requires minor changes in the Work but which does not involve a change in the Contract Price or the Contract Times.

22. *General Requirements* – Sections of Division 1 of the Specifications. The General Requirements pertain to all sections of the Specifications.

23. *Hazardous Environmental Condition* – The presence at the Site of Asbestos, PCBs, Petroleum, Hazardous Waste, or Radioactive Material in such quantities or circumstances that may present a substantial danger to persons or property exposed thereto in connection with the Work.

24. *Hazardous Waste* – The term Hazardous Waste shall have the meaning provided in Section 1004 of the Solid Waste Disposal Act (42 USC Section 6903) as amended from time to time.

25. *Laws and Regulations; Laws or Regulations* – Any and all applicable laws, rules, regulations, ordinances, codes, and orders of any and all governmental bodies, agencies, authorities, and courts having jurisdiction.

26. *Liens* – Charges, security interests, or encumbrances upon Project funds, real property, or personal property.

27. *Milestone* – A principal event specified in the Contract Documents relating to an intermediate completion date or time prior to Substantial Completion of all the Work.

28. *Notice of Award* – The written notice by Owner to the Successful Bidder stating that upon timely compliance by the Successful Bidder with the conditions precedent listed therein, Owner will sign and deliver the Agreement.

29. *Notice to Proceed* – A written notice given by Owner to Contractor fixing the date on which the Contract Times will commence to run and on which Contractor shall start to perform the Work under the Contract Documents.

30. *Owner* – The individual or entity with whom Contractor has entered into the Agreement and for whom the Work is to be performed. For purposes of this Agreement, the Owner is the City of Ocoee, referred to either as the City or the Owner.

31. *PCBs* – Polychlorinated biphenyls.

32. *Petroleum* – Petroleum, including crude oil or any fraction thereof which is liquid at standard conditions of temperature and pressure (60 degrees Fahrenheit and 14.7 pounds per square inch absolute), such as oil, petroleum, fuel oil, oil sludge, oil refuse, gasoline, kerosene, and oil mixed with other non-Hazardous Waste and crude oils.

33. *Progress Schedule* – A schedule, prepared and maintained by Contractor, describing the sequence and duration of the activities comprising the Contractor's plan to accomplish the Work within the Contract Times.

34. *Project* – The total construction of which the Work to be performed under the Contract Documents may be the whole, or a part.

35. *Project Manual* – The bound documentary information prepared for bidding and constructing the Work. A listing of the contents of the Project Manual, which may be bound in one or more volumes, is contained in the table(s) of contents.

36. *Radioactive Material* – Source, special nuclear, or byproduct material as defined by the Atomic Energy Act of 1954 (42 USC Section 2011 et seq.) as amended from time to time.

37. *Related Entity* – An officer, director, partner, employee, agent, consultant, or subcontractor.

38. *Resident Project Representative* – The authorized representative of Engineer who may be assigned to the Site or any part thereof.

39. *Samples* – Physical examples of materials, equipment, or workmanship that are representative of some portion of the Work and which establish the standards by which such portion of the Work will be judged.

40. *Schedule of Submittals* – A schedule, prepared and maintained by Contractor, of required submittals and the time requirements to support scheduled performance of related construction activities.

41. *Schedule of Values* – A schedule, prepared and maintained by Contractor, allocating portions of the Contract Price to various portions of the Work and used as the basis for reviewing Contractor's Applications for Payment.

42. *Shop Drawings* – All drawings, diagrams, illustrations, schedules, and other data or information which are specifically prepared or assembled by or for Contractor and submitted by Contractor to illustrate some portion of the Work.

43. *Site* – Lands or areas indicated in the Contract Documents as being furnished by Owner upon which the Work is to be performed, including rights-of-way and easements for access thereto, and such other lands furnished by Owner which are designated for the use of Contractor.

44. *Specifications* – That part of the Contract Documents consisting of written requirements for materials, equipment, systems, standards and workmanship as applied to the Work, and certain administrative requirements and procedural matters applicable thereto. The Specifications are included in the Project Manual for the project.

45. *Subcontractor* – An individual or entity having a direct contract with Contractor or with any other Subcontractor for the performance of a part of the Work at the Site.

46. *Substantial Completion* – The time at which the Work (or a specified part thereof) has progressed to the point where, in the opinion of Engineer, the Work (or a specified part thereof) is sufficiently complete, in accordance with the Contract Documents, so that the Work (or a specified part thereof) can be utilized for the purposes for which it is intended. The terms "substantially complete" and "substantially completed" as applied to all or part of the Work refer to Substantial Completion thereof. Final Completion shall be achieved only be acceptance of all of the Work by the Owner, as evidenced by its signature on the Final Certificate of Completion, which, in any event, shall only occur after the Owner has observed and approved such demonstration testing of the Project or has otherwise assured itself that all of the provisions and requirements of the Contract Documents have been fully satisfied.

47. *Successful Bidder* – The Bidder submitting a responsive Bid to whom Owner makes an award.

48. *Supplementary Conditions* – That part of the Contract Documents which amends or supplements these General Conditions.

49. *Supplier* – A manufacturer, fabricator, supplier, distributor, materialman, or vendor having a direct contract with Contractor or with any Subcontractor to furnish materials or equipment to be incorporated in the Work by Contractor or any Subcontractor.

50. *Underground Facilities* – All underground pipelines, conduits, ducts, cables, wires, manholes, vaults, tanks, tunnels, or other such facilities or attachments, and any encasements containing such facilities, including those that convey electricity, gases, steam, liquid petroleum products, telephone or other communications, cable television, water, wastewater, storm water, other liquids or chemicals, or traffic or other control systems.

51. *Unit Price Work* – Work to be paid for on the basis of unit prices.

52. *Work* – The entire construction or the various separately identifiable parts thereof required to be provided under the Contract Documents. Work includes and is the result of performing or providing all labor, services, and documentation necessary to produce such construction, and furnishing, installing, and incorporating all materials and equipment into such construction, all as required by the Contract Documents.

53. *Work Change Directive* – A written statement to Contractor issued on or after the Effective Date of the Agreement and signed by Owner and Agency upon recommendation of the Engineer ordering an addition, deletion, or revision in the Work, or responding to differing or unforeseen subsurface or physical conditions under which the Work is to be performed or to emergencies. A Work Change Directive will not change the Contract Price or the Contract Times but is evidence that the parties expect that the change ordered or documented by a Work Change Directive will be incorporated in a subsequently issued Change Order following negotiations by the parties as to its effect, if any, on the Contract Price or Contract Times.

1.02 *Terminology*

A. The following words or terms are not defined but, when used in the Bidding Requirements or Contract Documents, have the following meaning.

B. *Intent of Certain Terms or Adjectives*

1. The Contract Documents include the terms "as allowed," "as approved," "as ordered", "as directed" or terms of like effect or import to authorize an exercise of professional judgment by Engineer. In addition, the adjectives "reasonable," "suitable," "acceptable," "proper," "satisfactory," or adjectives of like effect or import are used to describe an action or determination of Engineer as to the Work. It is intended that such exercise of professional judgment, action or determination will be solely to evaluate, in general, the Work for compliance with the requirements of and information in the Contract Documents and conformance with the design concept of the completed Project as a functioning whole as shown or indicated in the Contract Documents (unless there is a specific statement indicating otherwise). The use of any such term or adjective is not intended to and shall not be effective to assign to Engineer any duty or authority to supervise or direct the performance of the Work

or any duty or authority to undertake responsibility contrary to the provisions of Paragraph 9.09 or any other provision of the Contract Documents.

C. *Day*

1. The word "day" means a calendar day of 24 hours measured from midnight to the next midnight.

D. *Defective*

1. The word "defective," when modifying the word "Work," refers to Work that is unsatisfactory, faulty, or deficient in that it:

   a. does not conform to the Contract Documents, or

   b. does not meet the requirements of any applicable inspection, reference standard, test, or approval referred to in the Contract Documents, or

   c. has been damaged prior to Engineer's recommendation of final payment (unless responsibility for the protection thereof has been assumed by Owner at Substantial Completion in accordance with Paragraph 14.04 or 14.05).

E. *Furnish, Install, Perform, Provide*

1. The word "furnish," when used in connection with services, materials, or equipment, shall mean to supply and deliver said services, materials, or equipment to the Site (or some other specified location) ready for use or installation and in usable or operable condition.

2. The word "install," when used in connection with services, materials, or equipment, shall mean to put into use or place in final position said services, materials, or equipment complete and ready for intended use.

3. The words "perform" or "provide," when used in connection with services, materials, or equipment, shall mean to furnish and install said services, materials, or equipment complete and ready for intended use.

4. When "furnish," "install," "perform," or "provide" is not used in connection with services, materials, or equipment in a context clearly requiring an obligation of Contractor, "provide" is implied.

F. Unless stated otherwise in the Contract Documents, words or phrases which have a well-known technical or construction industry or trade meaning are used in the Contract Documents in accordance with such recognized meaning.

ARTICLE 2 – PRELIMINARY MATTERS

2.01 *Delivery of Bonds and Evidence of Insurance*

A. When Contractor delivers the executed counterparts of the Agreement to Owner, Contractor shall also deliver to Owner such bonds as Contractor may be required to furnish in accordance with applicable Florida Law..

B. *Evidence of Insurance:* Before any Work at the Site is started, Contractor and Owner shall each deliver to the other, with copies to each additional insured identified in the Supplementary Conditions, certificates of insurance (and other evidence of insurance which either of them or any additional insured may reasonably request) which Contractor and Owner respectively are required to purchase and maintain in accordance with Article 5.

2.02 *Copies of Documents*

A. After the Contract has been executed, the Contractor will be furnished one (1) complete set of reproducible plans in electronic format, three (3) signed and sealed full-size prints, and one (1) 11"x17" print of the Drawings, one (1) complete set of the Project Manual (Contract Requirements and Specifications), and one (1) complete set of all addenda. The Contractor shall furnish each of the subcontractors, manufacturers, and material men such copies of the Contract Documents as may be required for their work. All copies of the Contract Documents shall be printed from the reproducible sets furnished to the Contractor. All costs of reproduction and printing shall be borne by the Contractor. The Contractor shall submit a complete set of reproducible Mylar ® sepias back to the Engineer as Project Record Drawings, as addressed in Section 1.07.E of the Contract General Requirements..

2.03 *Commencement of Contract Times; Notice to Proceed*

A. A Notice to Proceed may be given to Contractor at any time within thirty (30) days after the Effective Date of the Agreement. The Contract Time will commence to run on the date specified in the Notice to Proceed.

2.04 *Starting the Work*

A. Contractor shall start to perform the Work on the date when the Contract Times commence to run. No Work shall be done at the Site prior to the date on which the Contract Times commence to run.

2.05 *Before Starting Construction*

A. *Preliminary Schedules:* Within 21 days after the Contract Award, but in any event no later than the Preconstruction Conference, Contractor shall submit to Engineer for timely review**:**

1. a preliminary Progress Schedule;

2. a preliminary Schedule of Submittals; and

3. a preliminary Schedule of Values for all of the Work which includes quantities and prices of items which when added together equal the Contract Price and subdivides the Work into component parts in sufficient detail to serve as the basis for progress payments during performance of the Work. Such prices will include an appropriate amount of overhead and profit applicable to each item of Work.

2.06 *Preconstruction Conference*

A. Before any Work at the Site is started, a conference attended by Owner, Contractor, Engineer, Agency, and others as appropriate will be held to establish a working understanding among the parties as to the Work and to discuss the schedules referred to in Paragraph 2.05.A, procedures for handling Shop Drawings and other submittals, processing Applications for Payment, and maintaining required records.

2.07 *Initial Acceptance of Schedules*

A. At least 10 days before submission of the first Application for Payment a conference attended by Contractor, Engineer, and others as appropriate will be held to review for acceptability to Engineer as provided below the schedules submitted in accordance with Paragraph 2.05.A. Contractor shall have an additional 10 days to make corrections and adjustments and to complete and resubmit the schedules. No progress payment shall be made to Contractor until acceptable schedules are submitted to Engineer.

1. The Progress Schedule will be acceptable to Engineer if it provides an orderly progression of the Work to completion within the Contract Times. Such acceptance will not impose on Engineer responsibility for the Progress Schedule, for sequencing, scheduling, or progress of the Work nor interfere with or relieve Contractor from Contractor's full responsibility therefor.

2. Contractor's Schedule of Submittals will be acceptable to Engineer if it provides a workable arrangement for reviewing and processing the required submittals.

3. Contractor's Schedule of Values will be acceptable to Engineer as to form and substance if it provides a reasonable allocation of the Contract Price to component parts of the Work.

ARTICLE 3 – CONTRACT DOCUMENTS: INTENT, AMENDING, REUSE

3.01 *Intent*

A. The Contract Documents are complementary; what is required by one is as binding as if required by all.

B. It is the intent of the Contract Documents to describe a functionally complete Project (or part thereof) to be constructed in accordance with the Contract Documents. Any labor, documentation, services, materials, or equipment that may reasonably be inferred from the Contract Documents or from prevailing custom or trade usage as being required to produce the intended result will be provided whether or not specifically called for at no additional cost to Owner.

C. Clarifications and interpretations of the Contract Documents shall be issued by Engineer as provided in Article 9.

3.02 *Reference Standards*

A. Standards, Specifications, Codes, Laws, and Regulations

1. Reference to standards, specifications, manuals, or codes of any technical society, organization, or association, or to Laws or Regulations, whether such reference be specific or by implication, shall mean the standard, specification, manual, code, or Laws or Regulations in effect at the time of opening of Bids (or on the Effective Date of the Agreement if there were no Bids), except as may be otherwise specifically stated in the Contract Documents.

2. No provision of any such standard, specification, manual or code, or any instruction of a Supplier shall be effective to change the duties or responsibilities of Owner, Contractor, or Engineer, or any of their subcontractors, consultants, agents, or employees from those set forth in the Contract Documents. No such provision or instruction shall be effective to assign to Owner, or Engineer, or any of their Related Entities, any duty or authority to supervise or direct the performance of the Work or any duty or authority to undertake responsibility inconsistent with the provisions of the Contract Documents.

3.03 *Reporting and Resolving Discrepancies*

A. Reporting Discrepancies

1. *Contractor's Review of Contract Documents Before Starting Work*: Before undertaking each part of the Work, Contractor shall carefully study and compare the Contract Documents and check and verify pertinent figures therein and all applicable field measurements. Contractor shall promptly report in writing to Engineer any conflict, error, ambiguity, or discrepancy which Contractor may discover and shall obtain a written interpretation or clarification from Engineer before proceeding with any Work affected thereby.

2. *Contractor's Review of Contract Documents During Performance of Work*: If, during the performance of the Work, Contractor discovers any conflict, error, ambiguity, or discrepancy within the Contract Documents or between the Contract Documents and any provision of any Law or Regulation applicable to the performance of

the Work or of any standard, specification, manual or code, or of any instruction of any Supplier, Contractor shall promptly report it to Engineer in writing. Contractor shall not proceed with the Work affected thereby (except in an emergency as required by Paragraph 6.16.A) until an amendment or supplement to the Contract Documents has been issued by one of the methods indicated in Paragraph 3.04.

3. Contractor shall not be liable to Owner or Engineer for failure to report any conflict, error, ambiguity, or discrepancy in the Contract Documents unless Contractor knew or reasonably should have known thereof.

B. Resolving Discrepancies

1. Except as may be otherwise specifically stated in the Contract Documents, the provisions of the Contract Documents shall take precedence in resolving any conflict, error, ambiguity, or discrepancy between the provisions of the Contract Documents and:

a. the provisions of any standard, specification, manual, code, or instruction (whether or not specifically incorporated by reference in the Contract Documents); or

b. the provisions of any Laws or Regulations applicable to the performance of the Work (unless such an interpretation of the provisions of the Contract Documents would result in violation of such Law or Regulation).

3.04 *Amending and Supplementing Contract Documents*

A. The Contract Documents may be amended to provide for additions, deletions, and revisions in the Work or to modify the terms and conditions thereof by either a Change Order or a Work Change Directive.

B. The requirements of the Contract Documents may be supplemented, and minor variations and deviations in the Work may be authorized, by one or more of the following ways:

1. A Field Order;

2. Engineer's approval of a Shop Drawing or Sample; (Subject to the provisions of Paragraph 6.17.D.3) or

3. Engineer's written interpretation or clarification.

3.05 *Reuse of Documents*

A. Contractor and any Subcontractor or Supplier shall not:

1. have or acquire any title to or ownership rights in any of the Drawings, Specifications, or other documents (or copies of any thereof) prepared by or bearing the seal of Engineer or Engineer's consultants, including electronic media editions; or

2. reuse any of such Drawings, Specifications, other documents, or copies thereof on extensions of the Project or any other project without written consent of Owner and Engineer and specific written verification or adaption by Engineer.

B. The prohibition of this Paragraph 3.05 will survive final payment, or termination of the Contract. Nothing herein shall preclude Contractor from retaining copies of the Contract Documents for record purposes.

3.06 *Electronic Data*

A. Copies of data furnished by Owner or Engineer to Contractor or Contractor to Owner or Engineer that may be relied upon are limited to the printed copies (also known as hard copies). Files in electronic media format of text, data, graphics, or other types are furnished only for the convenience of the receiving party. Any conclusion or

information obtained or derived from such electronic files will be at the user's sole risk. If there is a discrepancy between the electronic files and the hard copies, the hard copies govern.

B. Because data stored in electronic media format can deteriorate or be modified inadvertently or otherwise without authorization of the data's creator, the party receiving electronic files agrees that it will perform acceptance tests or procedures within 60 days, after which the receiving party shall be deemed to have accepted the data thus transferred. Any errors detected within the 60-day acceptance period will be corrected by the transferring party.

C. When transferring documents in electronic media format, the transferring party makes no representations as to long term compatibility, usability, or readability of documents resulting from the use of software application packages, operating systems, or computer hardware differing from those used by the data's creator.

ARTICLE 4 – AVAILABILITY OF LANDS; SUBSURFACE AND PHYSICAL CONDITIONS; HAZARDOUS ENVIRONMENTAL CONDITIONS; REFERENCE POINTS

4.01 *Availability of Lands*

A. Owner shall furnish the Site. Owner shall notify Contractor of any encumbrances or restrictions not of general application but specifically related to use of the Site with which Contractor must comply in performing the Work. Owner will obtain in a timely manner and pay for easements for permanent structures or permanent changes in existing facilities. If Contractor and Owner are unable to agree on entitlement to or on the amount or extent, if any, of any adjustment in the Contract Price or Contract Times, or both, as a result of any delay in Owner's furnishing the Site or a part thereof, Contractor may make a Claim therefor as provided in Paragraph 10.05.

B. Upon reasonable written request, Owner shall furnish Contractor with a current statement of record legal title and legal description of the lands upon which the Work is to be performed and Owner's interest therein as necessary for giving notice of or filing a mechanic's or construction lien against such lands in accordance with applicable Laws and Regulations.

C. Contractor shall provide for all additional lands and access thereto that may be required for temporary construction facilities or storage of materials and equipment.

D. If all lands and rights-of-way are not obtained as herein contemplated before construction begins, CONTRACTOR shall begin the Work upon such land and rights-of-way as OWNER has previously acquired and no claim for damages whatsoever will be allowed by reason of the delay in obtaining the remaining lands and rights-of-way. Should OWNER be prevented or enjoined from proceeding with the Work, or from authorizing its prosecution, either before or after the commencement, by reason of any litigation, or by reason of its inability to procure any lands or rights-of-way for the Work, CONTRACTOR shall not be entitled to make or assert a claim for Additional Compensation by reason of said delay, or to withdraw from the Agreement except by consent of OWNER. Time for completion of the Work will be extended as provided in Article 12, to such time as OWNER determines will compensate for the time lost by such delay." An extension of Contract time will be Contractor's sole and exclusive remedy of delay.

4.02 *Subsurface and Physical Conditions*

A. *Reports and Drawings:* The Contract Documents may identify:

1. those reports of explorations and tests of subsurface conditions at or contiguous to the Site that Engineer has used in preparing the Contract Documents; and

2. those drawings of physical conditions in or relating to existing surface or subsurface structures at or contiguous to the Site (except Underground Facilities) that Engineer has used in preparing the Contract Documents.

B. *Limited Reliance by Contractor on Technical Data Authorized:* Contractor may rely upon the general accuracy of the "technical data" contained in such reports and drawings, but such reports and drawings are not Contract

Documents. Such "technical data" is identified in the Supplementary Conditions. Except for such reliance on such "technical data," Contractor may not rely upon or make any claim against Owner or Engineer, or any of their Related Entities with respect to:

1. the completeness of such reports and drawings for Contractor's purposes, including, but not limited to, any aspects of the means, methods, techniques, sequences, and procedures of construction to be employed by Contractor, and safety precautions and programs incident thereto; or

2. other data, interpretations, opinions, and information contained in such reports or shown or indicated in such drawings; or

3. any Contractor interpretation of or conclusion drawn from any "technical data" or any such other data, interpretations, opinions, or information.

4.03 *Differing Subsurface or Physical Conditions*

A. *Notice:* If Contractor believes that any subsurface or physical condition at or contiguous to the Site that is uncovered or revealed either:

1. is of such a nature as to establish that any "technical data" on which Contractor is entitled to rely as provided in Paragraph 4.02 is materially inaccurate; or

2. is of such a nature as to require a change in the Contract Documents; or

3. differs materially from that shown or indicated in the Contract Documents; or

4. is of an unusual nature, and differs materially from conditions ordinarily encountered and generally recognized as inherent in work of the character provided for in the Contract Documents;

then Contractor shall, promptly after becoming aware thereof and before further disturbing the subsurface or physical conditions or performing any Work in connection therewith (except in an emergency as required by Paragraph 6.16.A), notify Owner and Engineer in writing about such condition. Contractor shall not further disturb such condition or perform any Work in connection therewith (except as aforesaid) until receipt of written order to do so.

B. *Engineer's Review*: After receipt of written notice as required by Paragraph 4.03.A, Engineer will promptly review the pertinent condition, determine the necessity of Owner's obtaining additional exploration or tests with respect thereto, and advise Owner in writing (with a copy to Contractor) of Engineer's findings and conclusions.

C. *Possible Price and Times Adjustments*

1. The Contract Price or the Contract Times, or both, will be equitably adjusted to the extent that the existence of such differing subsurface or physical condition causes an increase or decrease in Contractor's cost of, or time required for, performance of the Work; subject, however, to the following:

a. such condition must meet any one or more of the categories described in Paragraph 4.03.A; and

b. with respect to Work that is paid for on a Unit Price Basis, any adjustment in Contract Price will be subject to the provisions of Paragraphs 9.07 and 11.03.

2. Contractor shall not be entitled to any adjustment in the Contract Price or Contract Times if:

a. Contractor knew of the existence of such conditions at the time Contractor made a final commitment to Owner with respect to Contract Price and Contract Times by the submission of a Bid or becoming bound under a negotiated contract; or

b. the existence of such condition could reasonably have been discovered or revealed as a result of any examination, investigation, exploration, test, or study of the Site and contiguous areas required by the Bidding Requirements or Contract Documents to be conducted by or for Contractor prior to Contractor's making such final commitment; or

c. Contractor failed to give the written notice as required by Paragraph 4.03.A.

3. If Owner and Contractor are unable to agree on entitlement to or on the amount or extent, if any, of any adjustment in the Contract Price or Contract Times, or both, a Claim may be made therefor as provided in Paragraph 10.05. However, Owner and Engineer, and any of their Related Entities shall not be liable to Contractor for any claims, costs, losses, or damages (including but not limited to all fees and charges of engineers, architects, attorneys, and other professionals and all court or arbitration or other dispute resolution costs) sustained by Contractor on or in connection with any other project or anticipated project.

4.04 *Underground Facilities*

A. *Shown or Indicated:* The information and data shown or indicated in the Contract Documents with respect to existing Underground Facilities at or contiguous to the Site is based on information and data furnished to Owner or Engineer by the owners of such Underground Facilities, including Owner, or by others. Unless it is otherwise expressly provided in the Supplementary Conditions:

1. Owner and Engineer shall not be responsible for the accuracy or completeness of any such information or data; and

2. the cost of all of the following will be included in the Contract Price, and Contractor shall have full responsibility for:

a. reviewing and checking all such information and data,

b. locating all Underground Facilities shown or indicated in the Contract Documents,

c. coordination of the Work with the owners of such Underground Facilities, including Owner, during construction, and

d. the safety and protection of all such Underground Facilities and repairing any damage thereto resulting from the Work.

B. *Not Shown or Indicated*

1. If an Underground Facility is uncovered or revealed at or contiguous to the Site which was not shown or indicated, or not shown or indicated with reasonable accuracy in the Contract Documents, Contractor shall, promptly after becoming aware thereof and before further disturbing conditions affected thereby or performing any Work in connection therewith (except in an emergency as required by Paragraph 6.16.A), identify the owner of such Underground Facility and give written notice to that owner and to Owner and Engineer. Engineer will promptly review the Underground Facility and determine the extent, if any, to which a change is required in the Contract Documents to reflect and document the consequences of the existence or location of the Underground Facility. During such time, Contractor shall be responsible for the safety and protection of such Underground Facility.

2. If Engineer concludes that a change in the Contract Documents is required, a Work Change Directive or a Change Order will be issued to reflect and document such consequences. An equitable adjustment shall be made in the Contract Price or Contract Times, or both, to the extent that they are attributable to the existence or location of any Underground Facility that was not shown or indicated or not shown or indicated with reasonable accuracy in the Contract Documents and that Contractor did not know of and could not reasonably have been expected to be aware of or to have anticipated. If Owner and Contractor are unable to agree on

entitlement to or on the amount or extent, if any, of any such adjustment in Contract Price or Contract Times, Owner or Contractor may make a Claim therefor as provided in Paragraph 10.05.

4.05 The Contractor shall have no claim for an adjustment in Contract Price or Contract Times (or Milestones) under this Article 4 unless (1) CONTRACTOR has given the written notice required in as set forth herein not later than thirty (30) days after the event giving rise thereto), and (2) within sixty (60) days after the event giving rise thereto, CONTRACTOR shall submit to OWNER a detailed claim setting forth CONTRACTOR'S right to an increase in Contract Price or extension of Contract Time. No claim by the CONTRACTOR hereunder shall be allowed if asserted after final payment under this Contract.

4.06 *Reference Points*

A. Owner shall provide engineering surveys to establish reference points for construction which in Engineer's judgment are necessary to enable Contractor to proceed with the Work. Contractor shall be responsible for laying out the Work, shall protect and preserve the established reference points and property monuments, and shall make no changes or relocations without the prior written approval of Owner. Contractor shall report to Engineer whenever any reference point or property monument is lost or destroyed or requires relocation because of necessary changes in grades or locations, and shall be responsible for the accurate replacement or relocation of such reference points or property monuments by professionally qualified personnel.

B. Engineer may check the lines, elevations, reference marks, batter boards, etc., set by Contractor, and Contractor shall correct any errors disclosed by such check. Such a check shall not be considered as approval of Contractor's work and shall not relieve Contractor of the responsibility for accurate construction of the entire Work. Contractor shall furnish personnel to assist Engineer in checking lines and grades."

4.07 *Hazardous Environmental Condition at Site*

A. *Reports and Drawings:* Reference is made to the Supplementary Conditions for the identification of those reports and drawings relating to a Hazardous Environmental Condition identified at the Site, if any, that have been utilized by the Engineer in the preparation of the Contract Documents.

B. *Limited Reliance by Contractor on Technical Data Authorized:* Contractor may rely upon the general accuracy of the "technical data" contained in such reports and drawings, but such reports and drawings are not Contract Documents. Such "technical data" is identified in the Supplementary Conditions. Except for such reliance on such "technical data," Contractor may not rely upon or make any claim against Owner or Engineer, or any of their Related Entities with respect to:

1. the completeness of such reports and drawings for Contractor's purposes, including, but not limited to, any aspects of the means, methods, techniques, sequences and procedures of construction to be employed by Contractor and safety precautions and programs incident thereto; or

2. other data, interpretations, opinions and information contained in such reports or shown or indicated in such drawings; or

3. any Contractor interpretation of or conclusion drawn from any "technical data" or any such other data, interpretations, opinions or information.

C. Contractor shall not be responsible for any Hazardous Environmental Condition uncovered or revealed at the Site which was not shown or indicated in Drawings or Specifications or identified in the Contract Documents to be within the scope of the Work. Contractor shall be responsible for a Hazardous Environmental Condition created with any materials brought to the Site by Contractor, Subcontractors, Suppliers, or anyone else for whom Contractor is responsible.

D. If Contractor encounters a Hazardous Environmental Condition or if Contractor or anyone for whom Contractor is responsible creates a Hazardous Environmental Condition, Contractor shall immediately: (i) secure or otherwise isolate such condition; (ii) stop all Work in connection with such condition and in any area affected thereby (except in an emergency as required by Paragraph 6.16.A); and (iii) notify Owner and Engineer (and promptly thereafter confirm such notice in writing). Owner shall promptly consult with Engineer concerning the necessity for Owner to retain a qualified expert to evaluate such condition or take corrective action, if any.

E. Contractor shall not be required to resume Work in connection with such condition or in any affected area until after Owner has obtained any required permits related thereto and delivered to Contractor written notice: (i) specifying that such condition and any affected area is or has been rendered safe for the resumption of Work; or (ii) specifying any special conditions under which such Work may be resumed safely. If Owner and Contractor cannot agree as to entitlement to or on the amount or extent, if any, of any adjustment in Contract Price or Contract Times, or both, as a result of such Work stoppage or such special conditions under which Work is agreed to be resumed by Contractor, either party may make a Claim therefor as provided in Paragraph 10.05.

F. If after receipt of such written notice Contractor does not agree to resume such Work based on a reasonable belief it is unsafe, or does not agree to resume such Work under such special conditions, then Owner may order the portion of the Work that is in the area affected by such condition to be deleted from the Work. If Owner and Contractor cannot agree as to entitlement to or on the amount or extent, if any, of an adjustment in Contract Price or Contract Times as a result of deleting such portion of the Work, then either party may make a Claim therefor as provided in Paragraph 10.05. Owner may have such deleted portion of the Work performed by Owner's own forces or others in accordance with Article 7.

G. To the fullest extent permitted by Laws and Regulations, Owner shall indemnify and hold harmless Contractor, Subcontractors, and Engineer, and the officers, directors, partners, employees, agents, consultants, and subcontractors of each and any of them from and against all claims, costs, losses, and damages (including but not limited to all fees and charges of engineers, architects, attorneys, and other professionals and all court or arbitration or other dispute resolution costs) arising out of or relating to a Hazardous Environmental Condition, provided that such Hazardous Environmental Condition: (i) was not shown or indicated in the Drawings or Specifications or identified in the Contract Documents to be included within the scope of the Work, and (ii) was not created by Contractor or by anyone for whom Contractor is responsible. Nothing in this Paragraph 4.06.G shall obligate Owner to indemnify any individual or entity from and against the consequences of that individual's or entity's own negligence.

H. To the fullest extent permitted by Laws and Regulations, Contractor shall indemnify and hold harmless Owner and Engineer, and the officers, directors, partners, employees, agents, consultants, and subcontractors of each and any of them from and against all claims, costs, losses, and damages (including but not limited to all fees and charges of engineers, architects, attorneys, and other professionals and all court or arbitration or other dispute resolution costs) arising out of or relating to a Hazardous Environmental Condition created by Contractor or by anyone for whom Contractor is responsible. Nothing in this Paragraph 4.06. H shall obligate Contractor to indemnify any individual or entity from and against the consequences of that individual's or entity's own negligence.

I. The provisions of Paragraphs 4.02, 4.03, and 4.04 do not apply to a Hazardous Environmental Condition uncovered or revealed at the Site.

J. Contractor shall be responsible for all safety measures concerning the handling of all asbestos pipe to be removed as relocated under This Agreement. Contractor shall indemnify the Owner, its agents, employees, and officials from and against all claims, costs, losses and damages, including but not limited to attorneys' fees and other professional fees, arising out of and relating to the removal and/or relocation of asbestos pipe.

ARTICLE 5 – BONDS AND INSURANCE

5.01 *Performance, Payment, and Other Bonds*

A. Contractor shall furnish performance and payment bonds, each in an amount at least equal to the Contract Price as security for the faithful performance and payment of all of Contractor's obligations under the Contract Documents all in accordance with applicable Florida Statutes, including but not limited to, Florida Statutes, 255.05, et seq. . These bonds shall be in form and content as identified in the Instructions To Bidders or otherwise in the Contract Documents. Contractor shall also furnish such other bonds as are required by the Contract Documents. The City of Ocoee has specified a form of a performance bond which shall be used for this project.

B. All bonds shall be executed by such sureties as are named in the current list of "Companies Holding Certificates of Authority as Acceptable Sureties on Federal Bonds and as Acceptable Reinsuring Companies" as published in Circular 570 (amended) by the Financial Management Service, Surety Bond Branch, U.S. Department of the Treasury. All bonds signed by an agent must be accompanied by a certified copy of the agent's authority to act.

C. If the surety on any bond furnished by Contractor is declared bankrupt or becomes insolvent or its right to do business is terminated in any state where any part of the Project is located or it ceases to meet the requirements of Paragraph 5.01.B, Contractor shall promptly notify Owner and Engineer and shall, within 20 days after the event giving rise to such notification, provide another bond and surety, both of which shall comply with the requirements of Paragraphs 5.01.B and 5.02.

5.02 *Licensed Sureties and Insurers*

A. All bonds and insurance required by the Contract Documents to be purchased and maintained by Owner or Contractor shall be obtained from surety or insurance companies that are duly licensed or authorized in the jurisdiction in which the Project is located to issue bonds or insurance policies for the limits and coverages so required. Such surety and insurance companies shall also meet such additional requirements and qualifications as may be provided in the Supplementary Conditions or below.

5.03 *Certificates of Insurance*

A. Contractor shall deliver to Owner, with copies to each additional insured identified below in this Article or in the Supplementary Conditions, certificates of insurance (and other evidence of insurance requested by Owner or any other additional insured) which Contractor is required to purchase and maintain.

B. Owner shall deliver to Contractor, with copies to each additional insured identified as identified below or in the Supplementary Conditions, certificates of insurance (and other evidence of insurance requested by Contractor or any other additional insured) which Owner is required to purchase and maintain.

5.04 *Contractor's Liability Insurance*

A. Contractor shall purchase and maintain such liability and other insurance as is appropriate for the Work being performed and as will provide protection from claims set forth below which may arise out of or result from Contractor's performance of the Work and Contractor's other obligations under the Contract Documents, whether it is to be performed by Contractor, any Subcontractor or Supplier, or by anyone directly or indirectly employed by any of them to perform any of the Work, or by anyone for whose acts any of them may be liable:

1. claims under workers' compensation, disability benefits, and other similar employee benefit acts;

2. claims for damages because of bodily injury, occupational sickness or disease, or death of Contractor's employees;

3. claims for damages because of bodily injury, sickness or disease, or death of any person other than Contractor's employees;

4. claims for damages insured by reasonably available personal injury liability coverage which are sustained:

   a. by any person as a result of an offense directly or indirectly related to the employment of such person by Contractor, or

   b. by any other person for any other reason;

5. claims for damages, other than to the Work itself, because of injury to or destruction of tangible property wherever located, including loss of use resulting therefrom; and

6. claims for damages because of bodily injury or death of any person or property damage arising out of the ownership, maintenance or use of any motor vehicle.

B. The policies of insurance required by this Paragraph 5.04 shall:

1. with respect to insurance required by Paragraphs 5.04.A.3 through 5.04.A.6 inclusive, include as additional insureds (subject to any customary exclusion regarding professional liability) Owner and Engineer, and any other individuals or entities identified below or in the Supplementary Conditions, all of whom shall be listed as additional insureds, and include coverage for the respective officers, directors, partners, employees, agents, consultants and subcontractors of each and any of all such additional insureds, and the insurance afforded to these additional insureds shall provide primary coverage for all claims covered thereby;

2. include at least the specific coverages and be written for not less than the limits of liability provided below or in the Supplementary Conditions or required by Laws or Regulations, whichever is greater;

3. include completed operations insurance;

4. include contractual liability insurance covering Contractor's indemnity obligations under Paragraphs 6.11 and 6.20;

5. contain a provision or endorsement that the coverage afforded will not be canceled, materially changed or renewal refused until at least 30 days prior written notice has been given to Owner and Contractor and to each other additional insured identified below or in the Supplementary Conditions to whom a certificate of insurance has been issued (and the certificates of insurance furnished by the Contractor pursuant to Paragraph 5.03 will so provide);

6. remain in effect at least until final payment and at all times thereafter when Contractor may be correcting, removing, or replacing defective Work in accordance with Paragraph 13.07; and

7. with respect to completed operations insurance, and any insurance coverage written on a claims-made basis, remain in effect for at least two years after final payment.

C. Contractor shall furnish Owner and each other additional insured identified below or in the Supplementary Conditions, to whom a certificate of insurance has been issued, evidence satisfactory to Owner and any such additional insured of continuation of such insurance at final payment and one year thereafter.

D. The limits of liability for the insurance required by paragraph 5.04 of the General Conditions shall provide coverage for not less than the following amounts or greater where required by Laws and Regulations:

1. Workers' Compensation, and related coverages under paragraphs 5.04.A.1 and A.2 of the General Conditions:

a.	State:	Statutory
b.	Applicable Federal (e.g., Longshoreman's):	Statutory
c.	Employer's Liability:	***

2. Contractor's General Liability under paragraphs 5.04.A.3 through A.6 of the General Conditions which shall include completed operations and product liability coverages and eliminate the exclusion with respect to property under the care, custody and control of Contractor:

a.	General Aggregate	2,000,000
b.	Products - Completed Operations Aggregate	1,000,000
c.	Personal and Advertising Injury	1,000,000
d.	Each Occurrence (Bodily Injury and Property Damage)	1,000,000

e. Personal Injury Liability Coverage will include Claims arising out of Employment.

f. Property Damage liability insurance will provide Explosion, Collapse, and Underground coverages where applicable.

g.	Excess or Umbrella Liability	2,000,000
	1) General Aggregate	
	2) Each Occurrence	

3. Automobile Liability under paragraph 5.04.A.6 of the General Conditions:

a.	Bodily Injury:	
	Each person	$1,000,000
	Each Accident	$1,000,000
b.	Property Damage:	
	Each Accident	$1,000,000
	OR	
c.	Combined Single	
	Limit of	$1,000,000

4. The Contractual Liability coverage required by paragraph 5.04.B.4 of the General Conditions shall provide coverage for not less than the following amounts:

a.	Bodily Injury:	
	Each Accident	$1,000,000
	Annual Aggregate	$2,000,000
b.	Property Damage:	
	Each Accident	$1,000,000
	Annual Aggregate	$2,000,000

5. Additional Insureds:

[name and address of design firm, if any]

City of Ocoee
1 N. Bluford Avenue
Ocoee, FL 34761

Others, as may be identified by the OWNER

5.05 *Owner's Liability Insurance*

A. In addition to the insurance required to be provided by Contractor under Paragraph 5.04, Owner, at Owner's option, may purchase and maintain at Owner's expense Owner's own liability insurance as will protect Owner against claims which may arise from operations under the Contract Documents. The Owner shall not have the duty or obligation to purchase or maintain such insurance and nothing herein shall be so deemed to require same.

5.06 *Property Insurance*

A. Unless otherwise provided in the Supplementary Conditions, Contractor shall purchase and maintain property insurance upon the Work at the Site in the amount of the full replacement cost thereof (Contractor shall be responsible for any deductible or self-insured retention.). This insurance shall:

1. include the interests of Owner, Contractor, Subcontractors, and Engineer, and any other individuals or entities identified in the Supplementary Conditions, and the officers, directors, partners, employees, agents, consultants and subcontractors of any of them, each of whom is deemed to have an insurable interest and shall be listed as an insured or additional insured;

2. be written on a Builder's Risk "all-risk" or open peril or special causes of loss policy form that shall at least include insurance for physical loss or damage to the Work, temporary buildings, falsework, and materials and equipment in transit, and shall insure against at least the following perils or causes of loss: fire, lightning, extended coverage, theft, vandalism and malicious mischief, earthquake, collapse, debris removal, demolition occasioned by enforcement of Laws and Regulations, water damage (other than caused by flood), and such other perils or causes of loss as may be specifically required by the Supplementary Conditions;

3. include expenses incurred in the repair or replacement of any insured property (including but not limited to fees and charges of engineers and architects);

4. cover materials and equipment stored at the Site or at another location that was agreed to in writing by Owner prior to being incorporated in the Work, provided that such materials and equipment have been included in an Application for Payment recommended by Engineer;

5. allow for partial utilization of the Work by Owner;

6. include testing and startup; and

7. be maintained in effect until final payment is made unless otherwise agreed to in writing by Owner, Contractor, and Engineer with 30 days written notice to each other additional insured to whom a certificate of insurance has been issued.

B. Contractor shall purchase and maintain such boiler and machinery insurance or additional property insurance as may be required by the Supplementary Conditions or Laws and Regulations which will include the interests of Owner, Contractor, Subcontractors, and Engineer, and any other individuals or entities identified in the Supplementary Conditions, and the officers, directors, partners, employees, agents, consultants and subcontractors of each and any of them, each of whom is deemed to have an insurable interest and shall be listed as an insured or additional insured.

C. All the policies of insurance (and the certificates or other evidence thereof) required to be purchased and maintained in accordance with Paragraph 5.06 will contain a provision or endorsement that the coverage afforded will not be canceled or materially changed or renewal refused until at least 30 days prior written notice has been given to Owner and Contractor and to each other additional insured to whom a certificate of insurance has been issued and will contain waiver provisions in accordance with Paragraph 5.07.

D. Owner shall not be responsible for purchasing and maintaining any property insurance specified in this Paragraph 5.06 to protect the interests of Contractor, Subcontractors, or others in the Work to the extent of any deductible amounts that are identified in the Supplementary Conditions. The risk of loss within such identified deductible amount will be borne by Contractor, Subcontractors, or others suffering any such loss, and if any of them wishes property insurance coverage within the limits of such amounts, each may purchase and maintain it at the purchaser's own expense.

E. Where applicable, the Contractor shall purchase and maintain adequate flood insurance for work within designated flood hazard areas as defined by P.L. 93-234 (Flood Disaster Protection Act).

5.07 *Waiver of Rights*

A. Owner and Contractor intend that all policies purchased in accordance with Paragraph 5.06 will protect Owner, Contractor, Subcontractors, and Engineer, and all other individuals or entities identified in the Supplementary Conditions to be listed as insureds or additional insureds (and the officers, directors, partners, employees, agents, consultants and subcontractors of each and any of them) in such policies and will provide primary coverage for all losses and damages caused by the perils or causes of loss covered thereby. All such policies shall contain provisions to the effect that in the event of payment of any loss or damage the insurers will have no rights of recovery against any of the insureds or additional insureds thereunder. Owner and Contractor waive all rights against each other and their respective officers, directors, partners, employees, agents, consultants and subcontractors of each and any of them for all losses and damages caused by, arising out of or resulting from any of the perils or causes of loss covered by such policies and any other property insurance applicable to the Work; and, in addition, waive all such rights against Subcontractors, and Engineer, and all other individuals or entities identified in the Supplementary Conditions to be listed as insured or additional insured (and the officers, directors, partners, employees, agents, consultants and subcontractors of each and any of them) under such policies for losses and damages so caused. None of the above waivers shall extend to the rights that any party making such waiver may have to the proceeds of insurance held by Contractor as trustee or otherwise payable under any policy so issued.

B. Owner waives all rights against Contractor, Subcontractors, and Engineer, and the officers, directors, partners, employees, agents, consultants and subcontractors of each and any of them for:

1. loss due to business interruption, loss of use, or other consequential loss extending beyond direct physical loss or damage to Owner's property or the Work caused by, arising out of, or resulting from fire or other perils whether or not insured by Owner; and

2. loss or damage to the completed Project or part thereof caused by, arising out of, or resulting from fire or other insured peril or cause of loss covered by any property insurance maintained on the completed Project or part thereof by Owner during partial utilization pursuant to Paragraph 14.05, after Substantial Completion pursuant to Paragraph 14.04, or after final payment pursuant to Paragraph 14.07.

C. Any insurance policy maintained by Owner covering any loss, damage or consequential loss referred to in Paragraph 5.07.B shall contain provisions to the effect that in the event of payment of any such loss, damage, or consequential loss, the insurers will have no rights of recovery against Contractor, Subcontractors, or Engineer, and the officers, directors, partners, employees, agents, consultants and subcontractors of each and any of them.

5.08 *Receipt and Application of Insurance Proceeds*

A. Any insured loss under the policies of insurance required by Paragraph 5.06 will be adjusted with Contractor and made payable to Contractor as fiduciary for the insureds, as their interests may appear, subject to the requirements of any applicable mortgage clause and of Paragraph 5.08.B. Contractor shall deposit in a separate account any money so received and shall distribute it in accordance with such agreement as the parties in interest may reach. If no other special agreement is reached, the damaged Work shall be repaired or replaced, the moneys so received applied on account thereof.

B. Contractor as fiduciary shall have power to adjust and settle any loss with the insurers unless one of the parties in interest shall object in writing within 15 days after the occurrence of loss to Contractor's exercise of this power. If such objection be made, Contractor as fiduciary shall make settlement with the insurers in accordance with such agreement as the parties in interest may reach.

5.09 *Acceptance of Bonds and Insurance; Option to Replace*

A. If Owner has any objection to the coverage afforded by or other provisions of the insurance required to be purchased and maintained by Contractor in accordance with this Article 5 on the basis of its not complying with the Contract Documents, Owner will notify Contractor in writing thereof within ten days of the date of delivery of such certificates to Owner. Contractor will provide such additional information in respect of insurance provided by him as Owner may reasonably request.

5.10 *Partial Utilization, Acknowledgment of Property Insurer*

A. If Owner finds it necessary to occupy or use a portion or portions of the Work prior to Substantial Completion of all the Work as provided in Paragraph 14.05, no such use or occupancy shall commence before the insurers providing the property insurance pursuant to Paragraph 5.06 have acknowledged notice thereof and in writing effected any changes in coverage necessitated thereby. The insurers providing the property insurance shall consent by endorsement on the policy or policies, but the property insurance shall not be canceled or permitted to lapse on account of any such partial use or occupancy.

ARTICLE 6 – CONTRACTOR'S RESPONSIBILITIES

6.01 *Supervision and Superintendence*

A. Contractor shall supervise, inspect, and direct the Work competently and efficiently, devoting such attention thereto and applying such skills and expertise as may be necessary to perform the Work in accordance with the Contract Documents. Contractor shall be solely responsible for the means, methods, techniques, sequences, and procedures of construction. Contractor shall not be responsible for the negligence of Owner or Engineer in the design or specification of a specific means, method, technique, sequence, or procedure of construction which is shown or indicated in and expressly required by the Contract Documents.

B. At all times during the progress of the Work, Contractor shall assign a competent resident superintendent who shall not be replaced without written notice to Owner and Engineer except under extraordinary circumstances. The superintendent will be Contractor's representative at the Site and shall have authority to act on behalf of Contractor. All communications given to or received from the superintendent shall be binding on Contractor.

6.02 *Labor; Working Hours*

A. Contractor shall provide competent, suitably qualified personnel to survey and lay out the Work and perform construction as required by the Contract Documents. Contractor shall at all times maintain good discipline and order at the Site.

B. Except as otherwise required for the safety or protection of persons or the Work or property at the Site or adjacent thereto, and except as otherwise stated in the Contract Documents, all Work at the Site shall be performed during regular working hours. Contractor will not permit the performance of Work on a Saturday, Sunday, or any legal holiday without Owner's written consent (which will not be unreasonably withheld) given after prior written notice to Engineer.

C. Except in the event of an emergency, no work shall be performed (1) before sunrise and after sunset, (2) nor between the hours of 7:00 p.m. and 7:00 a.m. (3) nor on Saturday and Sunday and (4) nor on any holiday of the Owner "Regular Working Hours" shall be between 7:00 a.m. and 7:00 p.m. and shall be established by the Contractor at the Pre-construction Meeting, provided the total working hours shall not exceed eight (8) hours per day and forty (40) hours per week. If construction or maintenance work requires operations during other than Regular Working Hours, the

Contractor shall obtain written permission of the Owner at least forty-eight (48) hours in advance of starting such work, and shall set forth the proposed schedule for overtime to give Owner ample time to arrange for his personnel to be at the site of the work. Contractor shall pay for the additional charges to the Owner on account of such overtime work. Such additional charges shall be a subsidiary obligation of Contractor and no extra payment shall be made by Owner on account of such overtime work.

D. This Agreement is subject to the applicable provisions of the Contract Work Hours and Safety Standards Act, Public Law 87-581, 87th Congress. No Contractor or Subcontractor contracting for any part of the Work shall require or permit any laborer or mechanic to be employed on the Work in excess of forty hours in any work week unless such laborer or mechanic receives compensation at a rate not less than one and one-half times his basic rate of pay for all hours worked in excess of forty hours in such work week, as the case may be.

E. Except as may be otherwise required by law, all claims and disputes pertaining to the classification of labor employed on the project under this Contract shall be decided by Owner's governing body or other duly designated official.

F. Contractor shall employ only competent persons to do the work and whenever Owner shall notify Contractor, in writing, that any person on the Work appears to be incompetent, unfaithful, disorderly, or otherwise unsatisfactory, such person shall be removed from the Project and shall not again be employed on it except with the consent of Owner.

G. Contractor and Subcontractors shall, insofar as practicable, give preference in the hiring of workers for the Project to qualified local residents with first preference being given to citizens of the United States who have served in the armed forces of the United States and have been honorably discharged therefrom or released from active duty therein.

H. Contractor shall reimburse the Owner the reasonable and customary amounts the Owner incurs for additional engineering and/or inspection costs incurred as a result of overtime work in excess of the regular working hours. Overtime costs shall be deducted from the Contract amount by written Change Order (Contract Modification). Overtime costs for the Owner's personnel shall be based on the individual's current overtime wage rate and shall include labor burden, etc. Overtime costs for personnel employed by the Engineer or Owner's independent testing laboratory shall be calculated in accordance with the terms of their respective contracts with the Owner

I. No work shall be performed on legal holidays of the Owner, which for the Work are defined as follows:

Holiday	Calendar Date

CITY OF OCOEE TO CONFIRM HOLIDAYS

Holiday	Calendar Date
New Year's Day	January 1
Martin Luther King Day	Third Monday in January
Memorial Day	Last Monday in May
Independence Day	July 4 (may be observed on the prior Friday or following Monday)
Labor Day	First Monday in September
Thanksgiving Day	4th Thursday in November
Day after Thanksgiving	4th Friday in November
Christmas Eve	December 24

Christmas	December 25

If Christmas and Christmas Eve fall on a weekend, the preceding Friday and following Monday will be observed as holidays. If Christmas falls on a Monday, the preceding Friday will be observed as a holiday. If Christmas falls on a Saturday, the preceding Thursday will be observed as a holiday.

6.03 *Services, Materials, and Equipment*

A. Unless otherwise specified in the Contract Documents, Contractor shall provide and assume full responsibility for all services, materials, equipment, labor, transportation, construction equipment and machinery, tools, appliances, fuel, power, light, heat, telephone, water, sanitary facilities, temporary facilities, and all other facilities and incidentals necessary for the performance, testing, start-up, and completion of the Work.

B. All materials and equipment incorporated into the Work shall be as specified or, if not specified, shall be of good quality and new, except as otherwise provided in the Contract Documents. All special warranties and guarantees required by the Specifications shall expressly run to the benefit of Owner. If required by Engineer, Contractor shall furnish satisfactory evidence (including reports of required tests) as to the source, kind, and quality of materials and equipment.

C. All materials and equipment shall be stored, applied, installed, connected, erected, protected, used, cleaned, and conditioned in accordance with instructions of the applicable Supplier, except as otherwise may be provided in the Contract Documents.

6.04 *Progress Schedule*

A. Contractor shall adhere to the Progress Schedule established in accordance with Paragraph 2.07 as it may be adjusted from time to time as provided below.

1. Contractor shall submit to Engineer for acceptance (to the extent indicated in Paragraph 2.07) proposed adjustments in the Progress Schedule that will not result in changing the Contract Times. Such adjustments will comply with any provisions of the General Requirements applicable thereto.

2. Proposed adjustments in the Progress Schedule that will change the Contract Times shall be submitted in accordance with the requirements of Article 12. Adjustments in Contract Times may only be made by a Change Order.

6.05 *Substitutes and "Or-Equals"*

A. Whenever an item of material or equipment is specified or described in the Contract Documents by using the name of a proprietary item or the name of a particular Supplier, the specification or description is intended to establish the type, function, appearance, and quality required. Unless the specification or description contains or is followed by words reading that no like, equivalent, or "or-equal" item or no substitution is permitted, other items of material or equipment or material or equipment of other Suppliers may be submitted to Engineer for review under the circumstances described below.

1. *"Or-Equal" Items:* If in Engineer's sole discretion an item of material or equipment proposed by Contractor is functionally equal to that named and sufficiently similar so that no change in related Work will be required, it may be considered by Engineer as an "or-equal" item, in which case review and approval of the proposed item may, in Engineer's sole discretion, be accomplished without compliance with some or all of the requirements for approval of proposed substitute items. For the purposes of this Paragraph 6.05.A.1, a proposed item of material or equipment will be considered functionally equal to an item so named if:

a. in the exercise of reasonable judgment Engineer determines that:

1) it is at least equal in materials of construction, quality, durability, appearance, strength, and design characteristics;

2) it will reliably perform at least equally well the function and achieve the results imposed by the design concept of the completed Project as a functioning whole;

3) it has a proven record of performance and availability of responsive service; and

b. Contractor certifies that, if approved and incorporated into the Work:

1) there will be no increase in cost to the Owner or increase in Contract Times, and

2) it will conform substantially to the detailed requirements of the item named in the Contract Documents.

2. Substitute Items

a. If in Engineer's sole discretion an item of material or equipment proposed by Contractor does not qualify as an "or-equal" item under Paragraph 6.05.A.1, it will be considered a proposed substitute item.

b. Contractor shall submit sufficient information as provided below to allow Engineer to determine that the item of material or equipment proposed is essentially equivalent to that named and an acceptable substitute therefor. Requests for review of proposed substitute items of material or equipment will not be accepted by Engineer from anyone other than Contractor.

c. The procedure requirements for review by Engineer will be as set forth in Paragraph 6.05.A.2.d, as supplemented in the General Requirements and as Engineer may decide is appropriate under the circumstances.

d. Contractor shall make written application to Engineer for review of a proposed substitute item of material or equipment that Contractor seeks to furnish or use. The application:

1) shall certify that the proposed substitute item will:

a) will perform adequately the functions and achieve the results called for by the general design,

b) be similar in substance to that specified, and

c) be suited to the same use as that specified;

2) will state:

a) the extent, if any, to which the use of the proposed substitute item will prejudice Contractor's achievement of Substantial Completion on time;

b) whether or not use of the proposed substitute item in the Work will require a change in any of the Contract Documents (or in the provisions of any other direct contract with Owner for other work on the Project) to adapt the design to the proposed substitute item; and

c) whether or not incorporation or use of the proposed substitute item in connection with the Work is subject to payment of any license fee or royalty;

3) will identify:

a) all variations of the proposed substitute item from that specified , and

b) available engineering, sales, maintenance, repair, and replacement services;

4) and shall contain an itemized estimate of all costs or credits that will result directly or indirectly from use of such substitute item, including costs of redesign and claims of other contractors affected by any resulting change.

B. *Substitute Construction Methods or Procedures:* If a specific means, method, technique, sequence, or procedure of construction is expressly required by the Contract Documents, Contractor may furnish or utilize a substitute means, method, technique, sequence, or procedure of construction approved by Engineer. Contractor shall submit sufficient information to allow Engineer, in Engineer's sole discretion, to determine that the substitute proposed is equivalent to that expressly called for by the Contract Documents. The requirements for review by Engineer will be similar to those provided in Paragraph 6.05.A.2.

C. *Engineer's Evaluation:* Engineer will be allowed a reasonable time within which to evaluate each proposal or submittal made pursuant to Paragraphs 6.05.A and 6.05.B. Engineer may require Contractor to furnish additional data about the proposed substitute item. Engineer will be the sole judge of acceptability. No "or equal" or substitute will be ordered, installed or utilized until Engineer's review is complete, which will be evidenced by either a Change Order for a substitute or an approved Shop Drawing for an "or equal." Engineer will advise Contractor in writing of any negative determination.

D. *Special Guarantee:* Owner may require Contractor to furnish at Contractor's expense a special performance guarantee or other surety with respect to any substitute.

E. *Engineer's Cost Reimbursement*: Engineer will record Engineer's costs in evaluating a substitute proposed or submitted by Contractor pursuant to Paragraphs 6.05.A.2 and 6.05.B. Whether or not Engineer approves a substitute item so proposed or submitted by Contractor, Contractor shall reimburse Owner for the charges of Engineer for evaluating each such proposed substitute. Contractor shall also reimburse Owner for the charges of Engineer for making changes in the Contract Documents (or in the provisions of any other direct contract with Owner) resulting from the acceptance of each proposed substitute; and all costs resulting from any delays in the Work while the substitution was undergoing reviews.

F. *Contractor's Expense*: Contractor shall provide all data in support of any proposed substitute or "or-equal" at Contractor's expense.

G. Equipment specifications containing experience clauses requires equipment manufacturers to have a record (min. number installations and years of operation) of satisfactory operation. In lieu of experience, a manufacturer/supplier may provide the equipment with the mutual understanding of all parties that no payment shall be released for such equipment including installation costs until it is demonstrated that the equipment meets the specific design performance requirements. All such monies retained shall be held by the Owner in an interest bearing escrow account from the date of application for payment for such work until the date of demonstrated conformance. All such retained monies and accrued interest shall be released to the Contractor upon demonstrated conformance. All monies not paid by the Owner shall bear interest a 7 percent per annum or the maximum rate provided by law, whichever is less. Where the equipment has failed specified tests to demonstrate conformance to the design requirements, the Contract shall remove said equipment and shall substitute the equipment as approved by the Owner/Engineer as specified having the required experience. The Contractor shall install the substituted equipment as required to provide a complete and functional system without cost to the Owner. (Refer to GC-13.07). No experience restriction will be permitted which unnecessarily reduces competition or innovation.

6.06 *Concerning Subcontractors, Suppliers, and Others*

A. Contractor shall not employ any Subcontractor, Supplier, or other individual or entity (including those acceptable to Owner as indicated in Paragraph 6.06.B), whether initially or as a replacement, against whom Owner may have reasonable objection. Contractor shall not be required to employ any Subcontractor, Supplier, or other individual or entity to furnish or perform any of the Work against whom Contractor has reasonable objection.

B. If the Instructions to Bidders or the Invitation To Bid requires the identity of certain Subcontractors, Suppliers, or other individuals or entities to be submitted to Owner in advance for acceptance by Owner by a specified date prior to the Effective Date of the Agreement, and if Contractor has submitted a list thereof in accordance with those requirements, then any such Subcontractor, Supplier, or other individuals or entities so identified and not objected to in writing by Owner or Engineer prior to the execution of the Agreement will be deemed acceptable to Owner and Engineer. All other Subcontractors, Suppliers, or other individuals or entities so identified shall be deemed to have been accepted if Owner or Engineer deliver no written objection thereto within forty-five (45) days after Contractor's written identification of such Subcontractors, Suppliers, or other individuals or entities. However, if within said forty-five (45) day period, Owner or Engineer has reasonable objection to any Subcontractors, Suppliers, or other individuals or entities whether previously identified or subsequently, Contractor shall submit an acceptable substitute without entitlement to any change in Contract Price. If Owner or Engineer demands the substitution at any time and it is determined that the Owner or Engineer did not have a reasonable objection, the Contractor shall comply with the demand for substitution and shall be entitled to an adjustment in the Contract Price (by appropriate Change order or Written Amendment) for the difference in cost resulting directly from such substitution. After acceptance by the Owner or Engineer of any particular Subcontractor, Supplier, or other individuals or entities, the Contractor shall make no substitution without written approval of the Owner, which may be granted or withheld at Owner's sole discretion. No acceptance by Owner or Engineer of any such Subcontractor, Supplier or any other person or organization shall be deemed to constitute a waiver or an estoppel of any right of Owner or Engineer to reject defective work performed in whole or in part by any such Subcontractor, Supplier, or other individual or entity.

C. Contractor shall be fully responsible to Owner and Engineer for all acts and omissions of the Subcontractors, Suppliers, and other individuals or entities performing or furnishing any of the Work just as Contractor is responsible for Contractor's own acts and omissions. Nothing in the Contract Documents:

1. shall create for the benefit of any such Subcontractor, Supplier, or other individual or entity any contractual relationship between Owner or Engineer and any such Subcontractor, Supplier or other individual or entity, nor

2. shall anything in the Contract Documents create any obligation on the part of Owner or Engineer to pay or to see to the payment of any moneys due any such Subcontractor, Supplier, or other individual or entity except as may otherwise be required by Laws and Regulations.

D. Contractor shall be solely responsible for scheduling and coordinating the Work of Subcontractors, Suppliers, and other individuals or entities performing or furnishing any of the Work under a direct or indirect contract with Contractor.

E. Contractor shall require all Subcontractors, Suppliers, and such other individuals or entities performing or furnishing any of the Work to communicate with Engineer through Contractor.

F. The divisions and sections of the Specifications and the identifications of any Drawings shall not control Contractor in dividing the Work among Subcontractors or Suppliers or delineating the Work to be performed by any specific trade.

G. All Work performed for Contractor by a Subcontractor or Supplier will be pursuant to an appropriate agreement between Contractor and the Subcontractor or Supplier which specifically binds the Subcontractor or Supplier to the applicable terms and conditions of the Contract Documents for the benefit of Owner and Engineer. Whenever any such agreement is with a Subcontractor or Supplier who is listed as an additional insured on the property insurance provided in Paragraph 5.06, the agreement between the Contractor and the Subcontractor or Supplier will contain provisions whereby the Subcontractor or Supplier waives all rights against Owner, Contractor, and Engineer, and all other individuals or entities identified in the Supplementary Conditions to be listed as insureds or additional insureds (and the officers, directors, partners, employees, agents, consultants and subcontractors of each and any of them) for all losses and damages caused by, arising out of, relating to, or resulting from any of the perils or causes of loss covered by such policies and any other property insurance applicable to the Work. If the insurers on any such policies require separate waiver forms to be signed by any Subcontractor or Supplier, Contractor will obtain the same.

6.07 *Patent Fees and Royalties*

A. Contractor shall pay all license fees and royalties and assume all costs incident to the use in the performance of the Work or the incorporation in the Work of any invention, design, process, product, or device which is the subject of patent rights or copyrights held by others. If a particular invention, design, process, product, or device is specified in the Contract Documents for use in the performance of the Work and if to the actual knowledge of Owner or Engineer its use is subject to patent rights or copyrights calling for the payment of any license fee or royalty to others, the existence of such rights shall be disclosed by Owner in the Contract Documents.

B. To the fullest extent permitted by Laws and Regulations, Contractor shall indemnify and hold harmless Owner and Engineer, and the officers, directors, partners, employees, agents, consultants and subcontractors of each and any of them from and against all claims, costs, losses, and damages (including but not limited to all fees and charges of engineers, architects, attorneys, and other professionals and all court or arbitration or other dispute resolution costs) arising out of or relating to any infringement of patent rights or copyrights incident to the use in the performance of the Work or resulting from the incorporation in the Work of any invention, design, process, product, or device not specified in the Contract Documents.

6.08 *Permits*

A. Unless otherwise provided in the Supplementary Conditions, Contractor shall obtain and pay for all construction permits and licenses. Owner shall assist Contractor, when necessary, in obtaining such permits and licenses. Contractor shall pay all governmental charges and inspection fees necessary for the prosecution of the Work which are applicable at the time of opening of Bids, or, if there are no Bids, on the Effective Date of the Agreement. Owner shall pay all charges of utility owners for connections for providing permanent service to the Work. Reference is made to the Bidding Requirements of the Contract Documents for a list of permits and licenses obtained by the OWNER before the bid advertisement.

6.09 *Laws and Regulations*

A. Contractor shall give all notices required by and shall comply with all Laws and Regulations applicable to the performance of the Work. Except where otherwise expressly required by applicable Laws and Regulations, neither Owner nor Engineer shall be responsible for monitoring Contractor's compliance with any Laws or Regulations.

B. If Contractor performs any Work knowing or having reason to know that it is contrary to Laws or Regulations, Contractor shall bear all claims, costs, losses, and damages (including but not limited to all fees and charges of engineers, architects, attorneys, and other professionals and all court or arbitration or other dispute resolution costs) arising out of or relating to such Work. However, it shall not be Contractor's primary responsibility to make certain that the Specifications and Drawings are in accordance with Laws and Regulations, but this shall not relieve Contractor of Contractor's obligations under Paragraph 3.03.

C. Changes in Laws or Regulations not known at the time of opening of Bids (or, on the Effective Date of the Agreement if there were no Bids) having an effect on the cost or time of performance of the Work shall be the subject of an adjustment in Contract Price or Contract Times. If Owner and Contractor are unable to agree on entitlement to or on the amount or extent, if any, of any such adjustment, a Claim may be made therefor as provided in Paragraph 10.05.

6.10 *Taxes*

A. Contractor shall pay all sales, consumer, use, and other similar taxes required to be paid by Contractor in accordance with the Laws and Regulations of the place of the Project which are applicable during the performance of the Work.

6.11 *Use of Site and Other Areas*

A. *Limitation on Use of Site and Other Areas*

1. Contractor shall confine construction equipment, the storage of materials and equipment, and the operations of workers to the Site and other areas permitted by Laws and Regulations, and shall not unreasonably encumber the Site and other areas with construction equipment or other materials or equipment. Contractor shall assume full responsibility for any damage to any such land or area, or to the owner or occupant thereof, or of any adjacent land or areas resulting from the performance of the Work. Use of Owner's existing buildings or lands by the Contractor for storage of materials and equipment will not be permitted. Use of existing washrooms, lavatories, sanitary facilities or plumbing facilities by the Contractor or any of his employees or Subcontractors will not be permitted.

2. Should any claim be made by any such owner or occupant because of the performance of the Work, Contractor shall promptly settle with such other party by negotiation or otherwise resolve the claim by arbitration or other dispute resolution proceeding or at law.

3. To the fullest extent permitted by Laws and Regulations, Contractor shall indemnify and hold harmless Owner and Engineer, and the officers, directors, partners, employees, agents, consultants and subcontractors of each and any of them from and against all claims, costs, losses, and damages (including but not limited to all fees and charges of engineers, architects, attorneys, and other professionals and all court or arbitration or other dispute resolution costs) arising out of or relating to any claim or action, legal or equitable, brought by any such owner or occupant against Owner, Engineer, or any other party indemnified hereunder to the extent caused by or based upon Contractor's performance of the Work.

B. *Removal of Debris During Performance of the Work:* During the progress of the Work Contractor shall keep the Site and other areas free from accumulations of waste materials, rubbish, and other debris. Removal and disposal of such waste materials, rubbish, and other debris shall conform to applicable Laws and Regulations.

C. *Cleaning:* Prior to Substantial Completion of the Work, Contractor shall clean the Site and the Work and make it ready for utilization by Owner. At the completion of the Work Contractor shall remove from the Site all tools, appliances, construction equipment and machinery, and surplus materials and shall restore to original condition all property not designated for alteration by the Contract Documents.

D. *Loading Structures:* Contractor shall not load nor permit any part of any structure to be loaded in any manner that will endanger the structure, nor shall Contractor subject any part of the Work or adjacent property to stresses or pressures that will endanger it.

6.12 *Record Documents*

A. Contractor shall maintain in a safe place at the Site one record copy of all Drawings, Specifications, Addenda, Change Orders, Work Change Directives, Field Orders, and written interpretations and clarifications in good order and annotated to show changes made during construction. These record documents together with all approved Samples and a counterpart of all approved Shop Drawings will be available to Engineer for reference. Upon completion of the Work, these record documents, Samples, and Shop Drawings will be delivered to Engineer for Owner.

6.13 *Safety and Protection*

A. Contractor shall be solely responsible for initiating, maintaining and supervising all safety precautions and programs in connection with the Work. Contractor shall take all necessary precautions for the safety of, and shall provide the necessary protection to prevent damage, injury or loss to:

1. all persons on the Site or who may be affected by the Work;

2. all the Work and materials and equipment to be incorporated therein, whether in storage on or off the Site; and

3. other property at the Site or adjacent thereto, including trees, shrubs, lawns, walks, pavements, roadways, structures, utilities, and Underground Facilities not designated for removal, relocation, or replacement in the course of construction.

4. In the event of temporary suspension of the Work, or during inclement weather, or whenever Engineer may direct; Contractor shall, and shall cause Subcontractors, to protect carefully the Work and materials against damage or injury from the weather. If, in the opinion of Engineer, any portion of Work or materials shall have been damaged or injured by reason of failure on the part of the Contractor or any Subcontractors to so protect the Work, such Work and materials shall be removed and replaced at the expense of Contractor.

B. Contractor shall comply with all applicable Laws and Regulations relating to the safety of persons or property, or to the protection of persons or property from damage, injury, or loss; and shall erect and maintain all necessary safeguards for such safety and protection. Contractor shall notify owners of adjacent property and of Underground Facilities and other utility owners when prosecution of the Work may affect them, and shall cooperate with them in the protection, removal, relocation, and replacement of their property. Contractor shall comply with the Trench Safety Act, Florida Law, Chapter 90-96 (CS/SB2626); OSHA (P.L. 91-596); the Contract Work Hours and Safety Standards Act (P.L. 91-54); and the Federal Register 29 CFR part 1926, OSHA Subpart P, and all federal requirements as part of the federal grant as stated in the solicitation and contract, as well as all other local, state and federal ordinances, laws, and regulations regarding safety.

C. All damage, injury, or loss to any property referred to in Paragraph 6.13.A.2 or 6.13.A.3 caused, directly or indirectly, in whole or in part, by Contractor, any Subcontractor, Supplier, or any other individual or entity directly or indirectly employed by any of them to perform any of the Work, or anyone for whose acts any of them may be liable, shall be remedied by Contractor (except damage or loss attributable to the fault of Drawings or Specifications or to the acts or omissions of Owner or Engineer or , or anyone employed by any of them, or anyone for whose acts any of them may be liable, and not attributable, directly or indirectly, in whole or in part, to the fault or negligence of Contractor or any Subcontractor, Supplier, or other individual or entity directly or indirectly employed by any of them).

D. Contractor's duties and responsibilities for safety and for protection of the Work shall continue until such time as all the Work is completed and Engineer has issued a notice to Owner and Contractor in accordance with Paragraph 14.07.B that the Work is acceptable (except as otherwise expressly provided in connection with Substantial Completion).

6.14 *Safety Representative*

A. Contractor shall designate a qualified and experienced safety representative at the Site whose duties and responsibilities shall be the prevention of accidents and the maintaining and supervising of safety precautions and programs.

6.15 *Hazard Communication Programs*

A. Contractor shall be responsible for coordinating any exchange of material safety data sheets or other hazard communication information required to be made available to or exchanged between or among employers at the Site in accordance with Laws or Regulations.

6.16 *Emergencies*

A. In emergencies affecting the safety or protection of persons or the Work or property at the Site or adjacent thereto, Contractor is obligated to act to prevent threatened damage, injury, or loss. Contractor shall give Engineer prompt written notice if Contractor believes that any significant changes in the Work or variations from the Contract Documents have been caused thereby or are required as a result thereof. If Engineer determines that a change in the

Contract Documents is required because of the action taken by Contractor in response to such an emergency, a Work Change Directive or Change Order will be issued.

6.17 *Shop Drawings and Samples*

A. Contractor shall submit Shop Drawings and Samples to Engineer for review and approval in accordance with the acceptable Schedule of Submittals (as required by Paragraph 2.07). Each submittal will be identified as Engineer may require.

1. *Shop Drawings*

a. Submit number of copies specified in the General Requirements.

b. Data shown on the Shop Drawings will be complete with respect to quantities, dimensions, specified performance and design criteria, materials, and similar data to show Engineer the services, materials, and equipment Contractor proposes to provide and to enable Engineer to review the information for the limited purposes required by Paragraph 6.17.D.

2. *Samples*

a. Submit number of Samples specified in the Specifications.

b. Clearly identify each Sample as to material, Supplier, pertinent data such as catalog numbers, the use for which intended and other data as Engineer may require to enable Engineer to review the submittal for the limited purposes required by Paragraph 6.17.D.

B. Where a Shop Drawing or Sample is required by the Contract Documents or the Schedule of Submittals, any related Work performed prior to Engineer's review and approval of the pertinent submittal will be at the sole expense and responsibility of Contractor.

C. *Submittal Procedures*

1. Before submitting each Shop Drawing or Sample, Contractor shall have determined and verified:

a. all field measurements, quantities, dimensions, specified performance and design criteria, installation requirements, materials, catalog numbers, and similar information with respect thereto;

b. the suitability of all materials with respect to intended use, fabrication, shipping, handling, storage, assembly, and installation pertaining to the performance of the Work;

c. all information relative to Contractor's responsibilities for means, methods, techniques, sequences, and procedures of construction, and safety precautions and programs incident thereto; and

d. shall also have reviewed and coordinated each Shop Drawing or Sample with other Shop Drawings and Samples and with the requirements of the Work and the Contract Documents.

2. Each submittal shall bear a stamp or specific written certification that Contractor has satisfied Contractor's obligations under the Contract Documents with respect to Contractor's review and approval of that submittal.

3. With each submittal, Contractor shall give Engineer specific written notice of any variations, that the Shop Drawing or Sample may have from the requirements of the Contract Documents. This notice shall be both a written communication separate from the Shop Drawings or Sample submittal; and, in addition, by a specific notation made on each Shop Drawing or Sample submitted to Engineer for review and approval of each such variation.

D. *Engineer's Review*

1. Engineer will provide timely review of Shop Drawings and Samples in accordance with the Schedule of Submittals acceptable to Engineer. Engineer's review and approval will be only to determine if the items covered by the submittals will, after installation or incorporation in the Work, conform to the information given in the Contract Documents and be compatible with the design concept of the completed Project as a functioning whole as indicated by the Contract Documents.

2. Engineer's review and approval will not extend to means, methods, techniques, sequences, or procedures of construction (except where a particular means, method, technique, sequence, or procedure of construction is specifically and expressly called for by the Contract Documents) or to safety precautions or programs incident thereto. The review and approval of a separate item as such will not indicate approval of the assembly in which the item functions.

3. Engineer's review and approval shall not relieve Contractor from responsibility for any variation from the requirements of the Contract Documents unless Contractor has complied with the requirements of Paragraph 6.17.C.3 and Engineer has given written approval of each such variation by specific written notation thereof incorporated in or accompanying the Shop Drawing or Sample. Engineer's review and approval shall not relieve Contractor from responsibility for complying with the requirements of Paragraph 6.17.C.1.

E. *Resubmittal Procedures*

1. Contractor shall make corrections required by Engineer and shall return the required number of corrected copies of Shop Drawings and submit, as required, new Samples for review and approval. Contractor shall direct specific attention in writing to revisions other than the corrections called for by Engineer on previous submittals.

6.18 *Continuing the Work*

A. Contractor shall carry on the Work and adhere to the Progress Schedule during all disputes or disagreements with Owner. No Work shall be delayed or postponed pending resolution of any disputes or disagreements, except as permitted by Paragraph 15.04 or as Owner and Contractor may otherwise agree in writing.

6.19 *Contractor's General Warranty and Guarantee*

A. Contractor warrants and guarantees to Owner for a period of one (1) year following the issuance of the Certificate of Completion for the project that all Work will be in accordance with the Contract Documents and will not be defective. Engineer and its Related Entities shall be entitled to rely on representation of Contractor's warranty and guarantee.

B. Contractor's warranty and guarantee hereunder excludes defects or damage caused by:

1. abuse, modification, or improper maintenance or operation by persons other than Contractor, Subcontractors, Suppliers, or any other individual or entity for whom Contractor is responsible; or

2. normal wear and tear under normal usage.

C. Contractor's obligation to perform and complete the Work in accordance with the Contract Documents shall be absolute. None of the following will constitute an acceptance of Work that is not in accordance with the Contract Documents or a release of Contractor's obligation to perform the Work in accordance with the Contract Documents:

1. observations by Engineer;

2. recommendation by Engineer or payment by Owner of any progress or final payment;

3. the issuance of a certificate of Substantial Completion by Engineer or any payment related thereto by Owner;

4. use or occupancy of the Work or any part thereof by Owner;

5. any review and approval of a Shop Drawing or Sample submittal or the issuance of a notice of acceptability by Engineer;

6. any inspection, test, or approval by others; or

7. any correction of defective Work by Owner.

6.20 *Indemnification*

A. The Contractor shall indemnify and hold harmless the City of Ocoee, and its agents, officials and employees, from liabilities, damages, losses and costs, including, but not limited to, reasonable attorney's fees, to the extent caused by the negligence, recklessness, or intentional wrongful misconduct of the Contractor or persons employed or utilized by the Contractor in the performance of the construction contract.

B. In any and all claims against the City of Ocoee or any of their respective consultants, agents, officers, directors, partners, or employees by any employee (or the survivor or personal representative of such employee) of Contractor, any Subcontractor, any Supplier, or any individual or entity directly or indirectly employed by any of them to perform any of the Work, or anyone for whose acts any of them may be liable, the indemnification obligation under Paragraph 6.20.A shall not be limited in any way by any limitation on the amount or type of damages, compensation, or benefits payable by or for Contractor or any such Subcontractor, Supplier, or other individual or entity under workers' compensation acts, disability benefit acts, or other employee benefit acts.

C. The indemnification obligations of Contractor under Paragraph 6.20.A shall not extend to the liability of Engineer and Engineer's officers, directors, partners, employees, agents, consultants and subcontractors arising out of:

1. the preparation or approval of, or the failure to prepare or approve, maps, Drawings, opinions, reports, surveys, Change Orders, designs, or Specifications; or

2. giving directions or instructions, or failing to give them, if that is the primary cause of the injury or damage.

6.21 *Delegation of Professional Design Services*

A. Contractor will not be required to provide professional design services unless such services are specifically required by the Contract Documents for a portion of the Work or unless such services are required to carry out Contractor's responsibilities for construction means, methods, techniques, sequences and procedures. Contractor shall not be required to provide professional services in violation of applicable law.

B. If professional design services or certifications by a design professional related to systems, materials or equipment are specifically required of Contractor by the Contract Documents, Owner and Engineer will specify all performance and design criteria that such services must satisfy. Contractor shall cause such services or certifications to be provided by a properly licensed professional, whose signature and seal shall appear on all drawings, calculations, specifications, certifications, Shop Drawings and other submittals prepared by such professional. Shop Drawings and other submittals related to the Work designed or certified by such professional, if prepared by others, shall bear such professional's written approval when submitted to Engineer.

C. Owner shall be entitled to rely upon the adequacy, accuracy and completeness of the services, certifications or approvals performed by such design professionals.

D. Pursuant to this Paragraph 6.21, Engineer's review and approval of design calculations and design drawings will be only for the limited purpose of checking for conformance with performance and design criteria given and the design concept expressed in the Contract Documents. Engineer's review and approval of Shop Drawings and other

submittals (except design calculations and design drawings) will be only for the purpose stated in Paragraph 6.17.D.1.

ARTICLE 7 – OTHER WORK AT THE SITE

7.01 *Related Work at Site*

A. Owner may perform other work related to the Project at the Site with Owner's employees, or via other direct contracts therefor, or have other work performed by utility owners. If such other work is not noted in the Contract Documents, then:

1. written notice thereof will be given to Contractor prior to starting any such other work; and

2. if Owner and Contractor are unable to agree on entitlement to or on the amount or extent, if any, of any adjustment in the Contract Price or Contract Times that should be allowed as a result of such other work, a Claim may be made therefor as provided in Paragraph 10.05.

B. Contractor shall afford each other contractor who is a party to such a direct contract, each utility owner and Owner, if Owner is performing other work with Owner's employees, proper and safe access to the Site, a reasonable opportunity for the introduction and storage of materials and equipment and the execution of such other work, and shall properly coordinate the Work with theirs. Contractor shall do all cutting, fitting, and patching of the Work that may be required to properly connect or otherwise make its several parts come together and properly integrate with such other work. Contractor shall not endanger any work of others by cutting, excavating, or otherwise altering their work and will only cut or alter their work with the written consent of Engineer and the others whose work will be affected. The duties and responsibilities of Contractor under this Paragraph are for the benefit of such utility owners and other contractors to the extent that there are comparable provisions for the benefit of Contractor in said direct contracts between Owner and such utility owners and other contractors.

C. If the proper execution or results of any part of Contractor's Work depends upon work performed by others under this Article 7, Contractor shall inspect such other work and promptly report to Engineer in writing any delays, defects, or deficiencies in such other work that render it unavailable or unsuitable for the proper execution and results of Contractor's Work. Contractor's failure to so report will constitute an acceptance of such other work as fit and proper for integration with Contractor's Work except for latent defects and deficiencies in such other work.

D. The Contract Time stipulated for this Construction Contract may also include the time required for utility construction by others as addressed by any Utility Relocation Schedule(s) included within the Contract Documents or Information Available to Bidders, and/or pursuant to referenced utility relocation period(s) detailed under the Contract General Requirements

7.02 *Coordination*

A. If Owner intends to contract with others for the performance of other work on the Project at the Site, the following will be set forth in Supplementary Conditions:

1. the individual or entity who will have authority and responsibility for coordination of the activities among the various contractors will be identified;

2. the specific matters to be covered by such authority and responsibility will be itemized; and

3. the extent of such authority and responsibilities will be provided.

B. Unless otherwise provided in the Supplementary Conditions, Owner shall have sole authority and responsibility for such coordination.

7.03 *Legal Relationships*

A. Paragraphs 7.01.A and 7.02 are not applicable for utilities not under the control of Owner.

B. Each other direct contract of Owner under Paragraph 7.01.A shall provide that the other contractor is liable to Owner and Contractor for the reasonable direct delay and disruption costs incurred by Contractor as a result of the other contractor's actions or inactions.

C. Contractor shall be liable to Owner and any other contractor for the reasonable direct delay and disruption costs incurred by such other contractor as a result of Contractor's action or inactions.

ARTICLE 8 – OWNER'S RESPONSIBILITIES

8.01 *Communications to Contractor*

A. Except as otherwise provided in these General Conditions, Owner shall issue all communications to Contractor through Engineer.

8.02 *Replacement of Engineer*

A. In case of termination of the employment of Engineer, Owner shall appoint an engineer to whom Contractor makes no reasonable objection, whose status under the Contract Documents shall be that of the former Engineer.

8.03 *Furnish Data*

A. Owner shall promptly furnish the data required of Owner under the Contract Documents.

8.04 *Pay When Due*

A. Owner shall make payments to Contractor when they are due as provided in Paragraphs 14.02.C and 14.07.C.

8.05 *Lands and Easements; Reports and Tests*

A. Owner's duties in respect of providing lands and easements and providing engineering surveys to establish reference points are set forth in Paragraphs 4.01 and 4.05. Paragraph 4.02 refers to Owner's identifying and making available to Contractor copies of reports of explorations and tests of subsurface conditions and drawings of physical conditions in or relating to existing surface or subsurface structures at or contiguous to the Site that have been utilized by Engineer in preparing the Contract Documents.

8.06 *Insurance*

A. Owner's responsibilities, if any, in respect to purchasing and maintaining liability and property insurance are set forth in Article 5.

8.07 *Change Orders*

A. Owner is obligated to execute Change Orders as indicated in Paragraph 10.03.

8.08 *Inspections, Tests, and Approvals*

A. Owner's responsibility in respect to certain inspections, tests, and approvals is set forth in Paragraph 13.03.B.

8.09 *Limitations on Owner's Responsibilities*

A. The Owner shall not supervise, direct, or have control or authority over, nor be responsible for, Contractor's means, methods, techniques, sequences, or procedures of construction, or the safety precautions and programs incident thereto, or for any failure of Contractor to comply with Laws and Regulations applicable to the performance of the Work. Owner will not be responsible for Contractor's failure to perform the Work in accordance with the Contract Documents.

8.10 *Undisclosed Hazardous Environmental Condition*

A. Owner's responsibility in respect to an undisclosed Hazardous Environmental Condition is set forth in Paragraph 4.06.

ARTICLE 9 – ENGINEER'S STATUS DURING CONSTRUCTION

9.01 *Owner's Representative*

A. Engineer will be Owner's representative during the construction period. The duties and responsibilities and the limitations of authority of Engineer as Owner's representative during construction are set forth in the Contract Documents and will not be changed without written consent of Owner and Engineer.

9.02 *Visits to Site*

A. Engineer will make visits to the Site at intervals appropriate to the various stages of construction as Engineer deems necessary in order to observe as an experienced and qualified design professional the progress that has been made and the quality of the various aspects of Contractor's executed Work. Based on information obtained during such visits and observations, Engineer, for the benefit of Owner, will determine, in general, if the Work is proceeding in accordance with the Contract Documents. Engineer will not be required to make exhaustive or continuous inspections on the Site to check the quality or quantity of the Work. Engineer's efforts will be directed toward providing for Owner a greater degree of confidence that the completed Work will conform generally to the Contract Documents. On the basis of such visits and observations, Engineer will keep Owner informed of the progress of the Work and will endeavor to guard Owner against defective Work.

B. Engineer's visits and observations are subject to all the limitations on Engineer's authority and responsibility set forth in Paragraph 9.09. Particularly, but without limitation, during or as a result of Engineer's visits or observations of Contractor's Work Engineer will not supervise, direct, control, or have authority over or be responsible for Contractor's means, methods, techniques, sequences, or procedures of construction, or the safety precautions and programs incident thereto, or for any failure of Contractor to comply with Laws and Regulations applicable to the performance of the Work.

9.03 *Project Representative*

A. Owner will furnish a Resident Project Representative to observe the performance of the Work. The duties, responsibilities and limitations of authority of this Resident Project Representative (and assistants) are as follows:

B. The Resident Project Representative (RPR) will act as directed by and under the supervision of OWNER, and will confer with Owner and Engineer. RPR's dealings in matters pertaining to the on-site work shall, in general, be only with Owner, Engineer, and Contractor, and dealings with subcontractors shall only be through or with the full knowledge and approval of Contractor.

C. DUTIES AND RESPONSIBILITIES OF RPR

1. Schedules: Review the progress schedule, schedule of Shop Drawing submittals, and schedule of values prepared by Contractor and consult with Owner and Engineer concerning the acceptability of these submittals.

2. Conferences and Meetings: Attend meetings with Contractor, such as pre-construction conferences, progress meetings, job conferences, and other project-related meetings.

3. Communications by the RPR

   a. The RPR shall communicate with the Contractor on the site working principally through the Contractor's project manager and superintendent to facilitate communications between the Engineer and the Owner and to advise the Contractor and the Engineer when the construction operations need to be adjusted to serve the purposes of the Owner on the site.

   b. As requested by Contractor obtain from Owner and Engineer additional details or information, when required for proper execution of the work.

4. Shop Drawings and Samples

   a. Record date of receipt of Field Shop Drawings and samples.

   b. Receive samples which are furnished at the site by Contractor, and notify Engineer of the availability of samples for examination.

   c. Advise Engineer and Contractor of the commencement of any Work requiring a Shop Drawing or sample if the submittal has not been approved by the Engineer.

5. Review of Work, Rejection of Defective Work, Inspections and Tests

   a. Conduct on-site observations of the Work in progress to assist Engineer in determining if the Work is, in general, proceeding in accordance with the Contract documents.

   b. Report to Owner and Engineer whenever the RPR believes that any Work will not produce a completed Project that conforms generally to the Contract Documents or will prejudice the integrity of the design concept of the completed Project as a functioning whole as indicated in the Contract Documents, or has been damaged, or does not meet the requirements of any inspection, test or approval required to be made; and advise Owner and Engineer of work the RPR believes should be corrected or rejected or should be uncovered for observation, or requires special testing, inspection or approval.

   c. Verify that tests, equipment and systems startups and operating and maintenance training are conducted in presence of appropriate personnel, and that Contractor maintains adequate records thereof; observe, record and report to Owner and Engineer appropriate details relative to the test procedures and startups.

   d. Accompany visiting inspectors representing public or other agencies having jurisdiction over the Project, record the results of these inspections, and report to Owner and Engineer.

6. Interpretation of Contract Documents: Report to Engineer when clarifications and interpretations of the Contract Documents are needed and transmit to Contractor clarifications and interpretations as issued by Engineer.

7. Modifications: Consider and evaluate Contractor's suggestions for modifications in Drawings or Specifications and report them with RPR'S recommendations to Owner and Engineer. Transmit to Contractor in writing decisions as issued by Owner and Engineer.

8. Records

a. Maintain at the job site orderly files for correspondence, reports of job conferences, Shop Drawings and samples, reproductions of original Contract Documents including all Work Change Directives, Addenda, Change Orders, Field orders, additional Drawings issued subsequent to the execution of the Contract, Engineer's clarifications and interpretations of the Contract Documents, progress reports, and other Project-related documents.

b. Prepare a daily report or keep a diary or log book, recording Contractor's hours on the job site, weather conditions, data relative to questions of Work Change Directives, Change Orders, or changed conditions, list of job site visitors, daily activities, decisions, observations in general, and specific observations in more detail as the case of observing test procedures; and send copies to Engineer.

c. Record names, addresses, and telephone numbers of Contractor, subcontractors, and major suppliers of materials and equipment.

9. Reports

a. Contractor and Engineer shall furnish the RPR with periodic reports as required of progress of the Work and Contractor's compliance with the progress schedule.

b. Contractor and Engineer shall consult with the RPR in advance of scheduled major tests, inspections or start of important phases of the Work.

c. Contractor and Engineer shall work with the RPR to draft proposed Change Orders and Work Change Directives, by providing backup material. The RPR may from time to time recommend that Change Orders, Work Change Directives and Field Orders be issued. .

10. Payment Requisitions: The RPR may assist in the review of applications for payment with Contractor for compliance with the established procedure for their submission and forward with recommendations to Engineer, noting particularly the relationship of the payment requested to the schedule of values, Work completed and materials and equipment delivered at the site but not incorporated in the Work. Initial approved percentages of completion with respect to the schedule of values.

11. Certificates, Maintenance and Operation Manuals: During the course of the Work, the RPR may assist to verify that certificates, maintenance and operation manuals and other data required to be assembled and furnished by Contractor are applicable to the items actually installed and in accordance with the Contract Documents, and have this material delivered to Engineer for review and forward same to Owner prior to final payment for the Work.

12. Completion

a. The RPR may, before the Contractor submits a request for a substantial completion inspection, submit to the Contractor a list of observed items requiring completion or correction.

b. The RPR may, but shall not be required, to advise the Contractor or the Engineer whether Contractor has performed inspections required by laws, rules, regulations, ordinances, codes, or orders applicable to the Work, including but not limited to those to be performed by public agencies having jurisdiction over the Work, including but not limited to, the City of Ocoee.

c. The RPR may also assist in conducting final inspection together with the Engineer, Owner and Contractor and assist in preparing a final list of items to be completed and corrected. In accordance with Florida Statutes Section §218.735, within 30 calendar days of reaching substantial completion of the construction services, or 45 days if over $10 million construction cost, the Owner and

Contractor shall work together to develop the single list of items and the estimated cost to complete each item on the list required to render complete, satisfactory, and acceptable the construction services purchased by the Owner. See also General Conditions Section 710 of the bid package, and Section 5 of the Contract, Payment Procedures.

d. The RPR may observe whether all items on final list have been completed or corrected and make recommendations to Engineer concerning acceptance and issuance of the Notice of Acceptability of the Work.

D. LIMITATIONS OF AUTHORITY

Resident Project Representative

1. By taking any such action as noted above, the RPR shall not be deemed to have authorized any deviation from the Contract Documents or substitution of materials or equipment (including "or-equal" items), unless same is expressly authorized by Engineer in accordance with this Agreement.

2. By taking such action as noted above, the RPR shall not be deemed to have usurped or exceeded the Engineer's authority or responsibilities , as set forth in the Agreement or the Contract Documents.

3. By taking any such action as noted above, the RPR shall not be deemed to have undertaken any of the responsibilities of the Contractor, Engineer, subcontractors, suppliers, or agents or employee's of same.

4. By taking any such action as noted above, the RPR shall not be deemed to have advised on, issued directions relative to, or assumed control over any aspect of the means, methods, techniques, sequences or procedures of construction unless such advice or directions are specifically required by the Contract Documents.

5. By taking any such action as noted above, the RPR shall not be deemed to have provided advise on, or issued directions regarding, or assumed control over safety precautions and programs in connection with the Work.

6. The RPR shall not accept Shop Drawing or sample submittals from anyone other than CONTRACTOR.

7. By taking any such action as noted above, the RPR shall not be deemed to have authorized OWNER to occupy the Project in whole or in part.

8. Shall not participate in specialized field or laboratory tests or inspections conducted by others, except as specifically authorized by OWNER and ENGINEER.

9.04 *Authorized Variations in Work*

A. Engineer may authorize minor variations in the Work from the requirements of the Contract Documents which do not involve an adjustment in the Contract Price or the Contract Times and are compatible with the design concept of the completed Project as a functioning whole as indicated by the Contract Documents. These may be accomplished by a Field Order and will be binding on Owner and also on Contractor, who shall perform the Work involved promptly. If Owner or Contractor believes that a Field Order justifies an adjustment in the Contract Price or Contract Times, or both, and the parties are unable to agree on entitlement to or on the amount or extent, if any, of any such adjustment, a Claim may be made therefor as provided in Paragraph 10.05.

9.05 *Rejecting Defective Work*

A. Engineer will have authority to reject Work which Engineer believes to be defective, or that Engineer believes will not produce a completed Project that conforms to the Contract Documents or that will prejudice the integrity of the design concept of the completed Project as a functioning whole as indicated by the Contract Documents. Engineer will also have authority to require special inspection or testing of the Work as provided in Paragraph 13.04, whether or not the Work is fabricated, installed, or completed.

9.06 *Shop Drawings, Change Orders and Payments*

A. In connection with Engineer's authority, and limitations thereof, as to Shop Drawings and Samples, see Paragraph 6.17.

B. In connection with Engineer's authority, and limitations thereof, as to design calculations and design drawings submitted in response to a delegation of professional design services, if any, see Paragraph 6.21.

C. In connection with Engineer's authority as to Change Orders, see Articles 10, 11, and 12.

D. In connection with Engineer's authority as to Applications for Payment, see Article 14.

9.07 *Determinations for Unit Price Work*

A. Engineer will determine the actual quantities and classifications of Unit Price Work performed by Contractor. Engineer will review with Contractor the Engineer's preliminary determinations on such matters before rendering a written decision thereon (by recommendation of an Application for Payment or otherwise). Engineer's written decision thereon will be final and binding (except as modified by Engineer to reflect changed factual conditions or more accurate data) upon Owner and Contractor, subject to the provisions of Paragraph 10.05.

9.08 *Decisions on Requirements of Contract Documents and Acceptability of Work*

A. Engineer will be the initial interpreter of the requirements of the Contract Documents and judge of the acceptability of the Work thereunder. All matters in question and other matters between Owner and Contractor arising prior to the date final payment is due relating to the acceptability of the Work, and the interpretation of the requirements of the Contract Documents pertaining to the performance of the Work, will be referred initially to Engineer in writing within 30 days of the event giving rise to the question.

B. Engineer will, with reasonable promptness, render a written decision on the issue referred. If Owner or Contractor believe that any such decision entitles them to an adjustment in the Contract Price or Contract Times or both, a Claim may be made under Paragraph 10.05. The date of Engineer's decision shall be the date of the event giving rise to the issues referenced for the purposes of Paragraph 10.05.B.

C. Engineer's written decision on the issue referred will be final and binding on Owner and Contractor, subject to the provisions of Paragraph 10.05.

D. When functioning as interpreter and judge under this Paragraph 9.08, Engineer will not show partiality to Owner or Contractor and will not be liable in connection with any interpretation or decision rendered in good faith in such capacity.

9.09 *Limitations on Engineer's Authority and Responsibilities*

A. Neither Engineer's authority or responsibility under this Article 9 or under any other provision of the Contract Documents nor any decision made by Engineer in good faith either to exercise or not exercise such authority or responsibility or the undertaking, exercise, or performance of any authority or responsibility by Engineer shall create, impose, or give rise to any duty in contract, tort, or otherwise owed by Engineer to Contractor, any Subcontractor, any Supplier, any other individual or entity, or to any surety for or employee or agent of any of them.

B. Engineer will not supervise, direct, control, or have authority over or be responsible for Contractor's means, methods, techniques, sequences, or procedures of construction, or the safety precautions and programs incident thereto, or for any failure of Contractor to comply with Laws and Regulations applicable to the performance of the Work. Engineer will not be responsible for Contractor's failure to perform the Work in accordance with the Contract Documents.

C. Engineer will not be responsible for the acts or omissions of Contractor or of any Subcontractor, any Supplier, or of any other individual or entity performing any of the Work.

D. Engineer's review of the final Application for Payment and accompanying documentation and all maintenance and operating instructions, schedules, guarantees, bonds, certificates of inspection, tests and approvals, and other documentation required to be delivered by Paragraph 14.07.A will only be to determine generally that their content complies with the requirements of, and in the case of certificates of inspections, tests, and approvals that the results certified indicate compliance with the Contract Documents.

E. The limitations upon authority and responsibility set forth in this Paragraph 9.09 shall also apply to the Resident Project Representative, if any, and assistants, if any.

ARTICLE 10 – CHANGES IN THE WORK; CLAIMS

10.01 *Authorized Changes in the Work*

A. Without invalidating the Contract and without notice to any surety, Owner may, subject to written approval by Agency at any time or from time to time, order additions, deletions, or revisions in the Work by a Change Order, or a Work Change Directive. Upon receipt of any such document, Contractor shall promptly proceed with the Work involved which will be performed under the applicable conditions of the Contract Documents (except as otherwise specifically provided).

B. If Owner and Contractor are unable to agree on entitlement to, or on the amount or extent, if any, of an adjustment in the Contract Price or Contract Times, or both, that should be allowed as a result of a Work Change Directive, a Claim may be made therefor as provided in Paragraph 10.05.

10.02 *Unauthorized Changes in the Work*

A. Contractor shall not be entitled to an increase in the Contract Price or an extension of the Contract Times with respect to any work performed that is not required by the Contract Documents as amended, modified, or supplemented as provided in Paragraph 3.04, except in the case of an emergency as provided in Paragraph 6.16 or in the case of uncovering Work as provided in Paragraph 13.04.B.

10.03 *Execution of Change Orders*

A. Owner and Contractor shall execute appropriate Change Orders recommended by Engineer covering:

1. changes in the Work which are: (i) ordered by Owner pursuant to Paragraph 10.01.A, (ii) required because of acceptance of defective Work under Paragraph 13.08.A or Owner's correction of defective Work under Paragraph 13.09, or (iii) agreed to by the parties;

2. changes in the Contract Price or Contract Times which are agreed to by the parties, including any undisputed sum or amount of time for Work actually performed in accordance with a Work Change Directive; and

3. changes in the Contract Price or Contract Times which embody the substance of any written decision rendered by Engineer pursuant to Paragraph 10.05; provided that, in lieu of executing any such Change Order, an appeal may be taken from any such decision in accordance with the provisions of the Contract Documents and applicable Laws and Regulations, but during any such appeal, Contractor shall carry on the Work and adhere to the Progress Schedule as provided in Paragraph 6.18.A.

10.04 *Notification to Surety*

A. If notice of any change affecting the general scope of the Work or the provisions of the Contract Documents (including, but not limited to, Contract Price or Contract Times) is required by the provisions of any bond to be given to a surety, the giving of any such notice will be Contractor's responsibility. The amount of each applicable bond will be adjusted to reflect the effect of any such change.

10.05 *Claims*

A. *Engineer's Decision Required*: All Claims, except those waived pursuant to Paragraph 14.09, shall be referred to the Engineer for decision. A decision by Engineer shall be required as a condition precedent to any exercise by Owner or Contractor of any rights or remedies either may otherwise have under the Contract Documents or by Laws and Regulations in respect of such Claims.

B. *Notice:* Written notice stating the general nature of each Claim shall be delivered by the claimant to Engineer and the other party to the Contract promptly (but in no event later than 30 days) after the start of the event giving rise thereto. The responsibility to substantiate a Claim shall rest with the party making the Claim. Notice of the amount or extent of the Claim, with supporting data shall be delivered to the Engineer and the other party to the Contract within 60 days after the start of such event (unless Engineer allows additional time for claimant to submit additional or more accurate data in support of such Claim). A Claim for an adjustment in Contract Price shall be prepared in accordance with the provisions of Paragraph 12.01.B. A Claim for an adjustment in Contract Time shall be prepared in accordance with the provisions of Paragraph 12.02.B. Each Claim shall be accompanied by claimant's written statement that the adjustment claimed is the entire adjustment to which the claimant believes it is entitled as a result of said event. The opposing party shall submit any response to Engineer and the claimant within 30 days after receipt of the claimant's last submittal (unless Engineer allows additional time).

C. *Engineer's Action*: Engineer will review each Claim and, within 30 days after receipt of the last submittal of the claimant or the last submittal of the opposing party, if any, take one of the following actions in writing:

1. deny the Claim in whole or in part,

2. approve the Claim, or

3. notify the parties that the Engineer is unable to resolve the Claim if, in the Engineer's sole discretion, it would be inappropriate for the Engineer to do so. For purposes of further resolution of the Claim, such notice shall be deemed a denial.

D. In the event that Engineer does not take action on a Claim within said 30 days, the Claim shall be deemed denied.

E. Engineer's written action under Paragraph 10.05.C or denial pursuant to Paragraphs 10.05.C.3 or 10.05.D will be final and binding upon Owner and Contractor, unless Owner or Contractor invoke the dispute resolution procedure set forth in Article 16 within 30 days of such action or denial.

F. No Claim for an adjustment in Contract Price or Contract Times will be valid if not submitted in accordance with this Paragraph 10.05.

ARTICLE 11 – COST OF THE WORK; ALLOWANCES; UNIT PRICE WORK

11.01 *Cost of the Work*

A. *Costs Included:* The term Cost of the Work means the sum of all costs, except those excluded in Paragraph 11.01.B, necessarily incurred and paid by Contractor in the proper performance of the Work. When the value of any Work covered by a Change Order or when a Claim for an adjustment in Contract Price is determined on the basis of Cost of the Work, the costs to be reimbursed to Contractor will be only those additional or incremental costs required because of the change in the Work or because of the event giving rise to the Claim. Except as otherwise

may be agreed to in writing by Owner, such costs shall be in amounts no higher than those prevailing in the locality of the Project, shall include only the following items, and shall not include any of the costs itemized in Paragraph 11.01.B.

1. Payroll costs for employees in the direct employ of Contractor in the performance of the Work under schedules of job classifications agreed upon by Owner and Contractor. Such employees shall include, without limitation, superintendents, foremen, and other personnel employed full time at the Site. Payroll costs for employees not employed full time on the Work shall be apportioned on the basis of their time spent on the Work. Payroll costs shall include, but not be limited to, salaries and wages plus the cost of fringe benefits, which shall include social security contributions, unemployment, excise, and payroll taxes, workers' compensation, health and retirement benefits, bonuses, sick leave, vacation and holiday pay applicable thereto. The expenses of performing Work outside of regular working hours, on Saturday, Sunday, or legal holidays, shall be included in the above to the extent authorized by Owner.

2. Cost of all materials and equipment furnished and incorporated in the Work, including costs of transportation and storage thereof, and Suppliers' field services required in connection therewith. All cash discounts shall accrue to Contractor unless Owner deposits funds with Contractor with which to make payments, in which case the cash discounts shall accrue to Owner. All trade discounts, rebates and refunds and returns from sale of surplus materials and equipment shall accrue to Owner, and Contractor shall make provisions so that they may be obtained.

3. Payments made by Contractor to Subcontractors for Work performed by Subcontractors. If required by Owner, Contractor shall obtain competitive bids from subcontractors acceptable to Owner and Contractor and shall deliver such bids to Owner, who will then determine, with the advice of Engineer, which bids, if any, will be acceptable. If any subcontract provides that the Subcontractor is to be paid on the basis of Cost of the Work plus a fee, the Subcontractor's Cost of the Work and fee shall be determined in the same manner as Contractor's Cost of the Work and fee as provided in this Paragraph 11.01.

4. Costs of special consultants (including but not limited to Engineers, architects, testing laboratories, surveyors, attorneys, and accountants) employed for services specifically related to the Work.

5. Supplemental costs including the following:

    a. The proportion of necessary transportation, travel, and subsistence expenses of Contractor's employees incurred in discharge of duties connected with the Work.

    b. Cost, including transportation and maintenance, of all materials, supplies, equipment, machinery, appliances, office, and temporary facilities at the Site, and hand tools not owned by the workers, which are consumed in the performance of the Work, and cost, less market value, of such items used but not consumed which remain the property of Contractor.

    c. Rentals of all construction equipment and machinery, and the parts thereof whether rented from Contractor or others in accordance with rental agreements approved by Owner with the advice of Engineer, and the costs of transportation, loading, unloading, assembly, dismantling, and removal thereof. All such costs shall be in accordance with the terms of said rental agreements. The rental of any such equipment, machinery, or parts shall cease when the use thereof is no longer necessary for the Work.

    d. Sales, consumer, use, and other similar taxes related to the Work, and for which Contractor is liable, imposed by Laws and Regulations.

    e. Deposits lost for causes other than negligence of Contractor, any Subcontractor, or anyone directly or indirectly employed by any of them or for whose acts any of them may be liable, and royalty payments and fees for permits and licenses.

f. Losses and damages (and related expenses) caused by damage to the Work, not compensated by insurance or otherwise, sustained by Contractor in connection with the performance of the Work (except losses and damages within the deductible amounts of property insurance established in accordance with Paragraph 5.06.D), provided such losses and damages have resulted from causes other than the negligence of Contractor, any Subcontractor, or anyone directly or indirectly employed by any of them or for whose acts any of them may be liable. Such losses shall include settlements made with the written consent and approval of Owner. No such losses, damages, and expenses shall be included in the Cost of the Work for the purpose of determining Contractor's fee.

g. The cost of utilities, fuel, and sanitary facilities at the Site.

h. Minor expenses such as telegrams, long distance telephone calls, telephone service at the Site, expressages, and similar petty cash items in connection with the Work.

i. The costs of premiums for all bonds and insurance Contractor is required by the Contract Documents to purchase and maintain.

B. *Costs Excluded:* The term Cost of the Work shall not include any of the following items:

1. Payroll costs and other compensation of Contractor's officers, executives, principals (of partnerships and sole proprietorships), general managers, safety managers, engineers, architects, estimators, attorneys, auditors, accountants, purchasing and contracting agents, expediters, timekeepers, clerks, and other personnel employed by Contractor, whether at the Site or in Contractor's principal or branch office for general administration of the Work and not specifically included in the agreed upon schedule of job classifications referred to in Paragraph 11.01.A.1 or specifically covered by Paragraph 11.01.A.4, all of which are to be considered administrative costs covered by the Contractor's fee.

2. Expenses of Contractor's principal and branch offices other than Contractor's office at the Site.

3. Any part of Contractor's capital expenses, including interest on Contractor's capital employed for the Work and charges against Contractor for delinquent payments.

4. Costs due to the negligence of Contractor, any Subcontractor, or anyone directly or indirectly employed by any of them or for whose acts any of them may be liable, including but not limited to, the correction of defective Work, disposal of materials or equipment wrongly supplied, and making good any damage to property.

5. Other overhead or general expense costs of any kind and the costs of any item not specifically and expressly included in Paragraphs 11.01.A and 11.01.B.

C. Contractor's Fee: When all the Work is performed on the basis of cost-plus, Contractor's fee shall be determined as set forth in the Agreement. When the value of any Work covered by a Change Order or when a Claim for an adjustment in Contract Price is determined on the basis of Cost of the Work, Contractor's fee shall be determined as set forth in Paragraph 12.01.C.

D. *Documentation:* Whenever the Cost of the Work for any purpose is to be determined pursuant to Paragraphs 11.01.A and 11.01.B, Contractor will establish and maintain records thereof in accordance with generally accepted accounting practices and submit in a form acceptable to Engineer an itemized cost breakdown together with supporting data.

11.02 *Allowances*

A. It is understood that Contractor has included in the Contract Price all allowances so named in the Contract Documents and shall cause the Work so covered to be performed for such sums and by such persons or entities as may be acceptable to Owner and Engineer.

B. Cash Allowances

1. Contractor agrees that:

a. the cash allowances include the cost to Contractor (less any applicable trade discounts) of materials and equipment required by the allowances to be delivered at the Site, and all applicable taxes; and

b. Contractor's costs for unloading and handling on the Site, labor, installation, overhead, profit, and other expenses contemplated for the cash allowances have been included in the Contract Price and not in the allowances, and no demand for additional payment on account of any of the foregoing will be valid.

C. *Contingency Allowance*

1. Contractor agrees that a contingency allowance, if any, is for the sole use of Owner to cover unanticipated costs.

D. Prior to final payment, an appropriate Change Order will be issued as recommended by Engineer to reflect actual amounts due Contractor on account of Work covered by allowances, and the Contract Price shall be correspondingly adjusted.

11.03 *Unit Price Work*

A. Where the Contract Documents provide that all or part of the Work is to be Unit Price Work, initially the Contract Price will be deemed to include for all Unit Price Work an amount equal to the sum of the unit price for each separately identified item of Unit Price Work times the estimated quantity of each item as indicated in the Agreement.

B. The estimated quantities of items of Unit Price Work are not guaranteed and are solely for the purpose of comparison of Bids and determining an initial Contract Price. Determinations of the actual quantities and classifications of Unit Price Work performed by Contractor will be made by Engineer subject to the provisions of Paragraph 9.07.

C. Each unit price will be deemed to include an amount considered by Contractor to be adequate to cover Contractor's overhead and profit for each separately identified item.

D. Owner or Contractor may make a Claim for an adjustment in the Contract Price in accordance with Paragraph 10.05 if:

1. the Bid price of a particular item of Unit Price Work amounts to more than 5 percent of the Contract Price and the variation in the quantity of that particular item of Unit Price Work performed by Contractor differs by more than 25 percent from the estimated quantity of such item indicated in the Agreement; and

2. there is no corresponding adjustment with respect to any other item of Work; and

3. Contractor believes that Contractor is entitled to an increase in Contract Price as a result of having incurred additional expense or Owner believes that Owner is entitled to a decrease in Contract Price and the parties are unable to agree as to the amount of any such increase or decrease.

ARTICLE 12 – CHANGE OF CONTRACT PRICE; CHANGE OF CONTRACT TIMES

12.01 *Change of Contract Price*

A. The Contract Price may only be changed by a Change Order. Any Claim for an adjustment in the Contract Price shall be based on written notice submitted by the party making the Claim to the Engineer and the other party to the Contract in accordance with the provisions of Paragraph 10.05.

B. The value of any Work covered by a Change Order or of any Claim for an adjustment in the Contract Price will be determined as follows:

1. where the Work involved is covered by unit prices contained in the Contract Documents, by application of such unit prices to the quantities of the items involved (subject to the provisions of Paragraph 11.03); or

2. where the Work involved is not covered by unit prices contained in the Contract Documents, by a mutually agreed lump sum (which may include an allowance for overhead and profit not necessarily in accordance with Paragraph 12.01.C.2); or

3. where the Work involved is not covered by unit prices contained in the Contract Documents and agreement to a lump sum is not reached under Paragraph 12.01.B.2, on the basis of the Cost of the Work (determined as provided in Paragraph 11.01) plus a Contractor's fee for overhead and profit (determined as provided in Paragraph 12.01.C).

C. Contractor's Fee: The Contractor's fee for overhead and profit shall be determined as follows:

1. a mutually acceptable fixed fee; or

2. if a fixed fee is not agreed upon, then a fee based on the following percentages of the various portions of the Cost of the Work:

a. for costs incurred under Paragraphs 11.01.A.1 and 11.01.A.2, the Contractor's fee shall be 15 percent;

b. for costs incurred under Paragraph 11.01.A.3, the Contractor's fee shall be five percent;

c. where one or more tiers of subcontracts are on the basis of Cost of the Work plus a fee and no fixed fee is agreed upon, the intent of Paragraph 12.01.C.2.a is that the Subcontractor who actually performs the Work, at whatever tier, will be paid a fee of 15 percent of the costs incurred by such Subcontractor under Paragraphs 11.01.A.1 and 11.01.A.2 and that any higher tier Subcontractor and Contractor will each be paid a fee of five percent of the amount paid to the next lower tier Subcontractor;

d. no fee shall be payable on the basis of costs itemized under Paragraphs 11.01.A.4, 11.01.A.5, and 11.01.B;

e. the amount of credit to be allowed by Contractor to Owner for any change which results in a net decrease in cost will be the amount of the actual net decrease in cost plus a deduction in Contractor's fee by an amount equal to five percent of such net decrease; and

f. when both additions and credits are involved in any one change, the adjustment in Contractor's fee shall be computed on the basis of the net change in accordance with Paragraphs 12.01.C.2.a through 12.01.C.2.e, inclusive.

g. Equipment: For any machinery or special equipment (other than small tools), including fuel and lubricant, the Contractor will receive 100% of the "Rental Rate Blue Book" for the actual time that such equipment is in operation on the work, and 50% of the "Rental Rate Blue Book" for the time the equipment is directed to standby and remain on the project site. The equipment rates will be based on the latest edition (version current at the time of bid) of the "Rental Rate Blue Book for Construction Equipment" or the "Rental Rate Blue Book for Older Construction Equipment," whichever is applicable, as published by Machinery Information Division of PRIMEDIA Information, Inc.(version current at the time of bid), using all instructions and adjustments contained therein and as modified below. On all projects, the Engineer will adjust the rates using regional adjustments and Rate Adjustment Tables according to the instructions in the "Blue Book".

h. The Monthly Rate is the Basic Machine Rate Plus Any Attachments. Standby rates will apply when equipment is not in operation and is directed by the Engineer to standby at the project site when needed again to complete work and the cost of moving the equipment will exceed the accumulated standby cost. Standby rates will not apply on any day the equipment operates eight or more hours. Standby payment will be limited to only that number of hours which, when added to the operating time of that day equals eight hours. Standby payment will not be made on days that are not normally considered workdays on the project.

i. The Owner will allow for the cost of transporting the equipment to and from the location at which it will be used. If the equipment requires assembly or disassembly for transport, the Owner will pay for the time to perform this work at the rate of standby equipment

12.02 *Change of Contract Times*

A. The Contract Times may only be changed by a Change Order. Any Claim for an adjustment in the Contract Times shall be based on written notice submitted by the party making the Claim to the Engineer and the other party to the Contract in accordance with the provisions of Paragraph 10.05.

B. Any adjustment of the Contract Times covered by a Change Order or any Claim for an adjustment in the Contract Times will be determined in accordance with the provisions of this Article 12.

12.03 *Delays*

A. Where Contractor is prevented from completing any part of the Work within the Contract Times due to delay beyond the control of Contractor, the Contract Times will be extended in an amount equal to the time lost due to such delay if a Claim is made therefor as provided in Paragraph 12.02.A. Delays beyond the control of Contractor shall include, but not be limited to, acts or neglect by Owner, acts or neglect of utility owners or other contractors performing other work as contemplated by Article 7, fires, floods, epidemics, abnormal weather conditions, or acts of God.

B. If Owner, Engineer, or other contractors or utility owners performing other work for Owner as contemplated by Article 7, or anyone for whom Owner is responsible, delays, disrupts, or interferes with the performance or progress of the Work, then Contractor shall be entitled to an equitable adjustment in the Contract Price or the Contract Times, or both. Contractor's entitlement to an adjustment of the Contract Times is conditioned on such adjustment being essential to Contractor's ability to complete the Work within the Contract Times.

C. If Contractor is delayed in the performance or progress of the Work by fire, flood, epidemic, abnormal weather conditions, acts of God, acts or failures to act of utility owners not under the control of Owner, or other causes not the fault of and beyond control of Owner and Contractor, then Contractor shall be entitled to an equitable adjustment in Contract Times, if such adjustment is essential to Contractor's ability to complete the Work within the Contract Times. Such an adjustment shall be Contractor's sole and exclusive remedy for the delays described in this Paragraph 12.03.B.

1. delays caused by or within the control of Contractor; or

D. Owner, Engineer and the Related Entities of each of them shall not be liable to Contractor for any claims, costs, losses, or damages (including but not limited to all fees and charges of Engineers, architects, attorneys, and other professionals and all court or arbitration or other dispute resolution costs) sustained by Contractor on or in connection with any other project or anticipated project.

E. Contractor shall not be entitled to an adjustment in Contract Price or Contract Times for delays within the control of Contractor. Delays attributable to and within the control of a Subcontractor or Supplier shall be deemed to be delays within the control of Contractor.

ARTICLE 13 – TESTS AND INSPECTIONS; CORRECTION, REMOVAL OR ACCEPTANCE OF DEFECTIVE WORK

13.01 *Notice of Defects*

A. Prompt notice of all defective Work of which Owner or Engineer has actual knowledge will be given to Contractor. All defective Work may be rejected, corrected, or accepted as provided in this Article 13.

13.02 *Access to Work*

A. Owner, Engineer, their consultants and other representatives and personnel of Owner, independent testing laboratories, and governmental agencies with jurisdictional interests will have access to the Site and the Work at reasonable times for their observation, inspecting, and testing. Contractor shall provide them proper and safe conditions for such access and advise them of Contractor's Site safety procedures and programs so that they may comply therewith as applicable.

13.03 *Tests and Inspections*

A. Contractor shall give Engineer timely notice of readiness of the Work for all required inspections, tests, or approvals and shall cooperate with inspection and testing personnel to facilitate required inspections or tests.

B. Owner shall employ and pay for the services of an independent testing laboratory to perform all inspections, tests, or approvals required by the Contract Documents except:

1. for inspections, tests, or approvals covered by Paragraphs 13.03.C and 13.03.D below;

2. that costs incurred in connection with tests or inspections conducted pursuant to Paragraph 13.04.B shall be paid as provided in said Paragraph 13.04.C; and

3. as otherwise specifically provided in the Contract Documents.

C. If Laws or Regulations of any public body having jurisdiction require any Work (or part thereof) specifically to be inspected, tested, or approved by an employee or other representative of such public body, Contractor shall assume full responsibility for arranging and obtaining such inspections, tests, or approvals, pay all costs in connection therewith, and furnish Engineer the required certificates of inspection or approval. Inspections required by the Contract Documents for pre-engineered, prefabricated or precast structural components shall be performed at the place of manufacture upon each stage of manufacture, by a registered professional engineer licensed in the State of Florida (other than the Manufacturer's Specialty Engineer) or a person under his direct supervision. Two (2) copies of a written report of such inspection shall be provided to the Engineer prior to delivery to the site and shall be prepared by the inspector and each copy shall bear the seal and signature of the respective registered professional engineer. The costs for these inspections and reports shall be paid for by the Contractor.

D. Contractor shall be responsible for arranging and obtaining and shall pay all costs in connection with any inspections, tests, or approvals required for Owner's and Engineer's acceptance of materials or equipment to be incorporated in the Work; or acceptance of materials, mix designs, or equipment submitted for approval prior to Contractor's purchase thereof for incorporation in the Work. Such inspections, tests, or approvals shall be performed by organizations acceptable to Owner and Engineer.

E. If any Work (or the work of others) that is to be inspected, tested, or approved is covered by Contractor without written concurrence of Engineer, it must, if requested by Engineer, be uncovered for observation.

F. Uncovering Work as provided in Paragraph 13.03.E shall be at Contractor's expense unless Contractor has given Engineer timely notice of Contractor's intention to cover the same and Engineer has not acted with reasonable promptness in response to such notice.

13.04 *Uncovering Work*

A. If any Work is covered contrary to the written request of Engineer, it must, if requested by Engineer, be uncovered for Engineer's observation and replaced at Contractor's expense.

B. If Engineer considers it necessary or advisable that covered Work be observed by Engineer or inspected or tested by others, Contractor, at Engineer's request, shall uncover, expose, or otherwise make available for observation, inspection, or testing as Engineer may require, that portion of the Work in question, furnishing all necessary labor, material, and equipment. Contractor shall have no claim for delay or disruption based upon the Engineer's reasonable actions under this paragraph.

C. If it is found that the uncovered Work is defective, Contractor shall pay all claims, costs, losses, and damages (including but not limited to all fees and charges of engineers, architects, attorneys, and other professionals and all court or arbitration or other dispute resolution costs) arising out of or relating to such uncovering, exposure, observation, inspection, and testing, and of satisfactory replacement or reconstruction (including but not limited to all costs of repair or replacement of work of others); and Owner shall be entitled to an appropriate decrease in the Contract Price. If the parties are unable to agree as to the amount thereof, Owner may make a Claim therefor as provided in Paragraph 10.05.

D. If, the uncovered Work is not found to be defective, Contractor shall be allowed an increase in the Contract Price or an extension of the Contract Times, or both, directly attributable to such uncovering, exposure, observation, inspection, testing, replacement, and reconstruction. If the parties are unable to agree as to the amount or extent thereof, Contractor may make a Claim therefor as provided in Paragraph 10.05.

13.05 *Owner May Stop the Work*

A. If the Work is defective, or Contractor fails to supply sufficient skilled workers or suitable materials or equipment, or fails to perform the Work in such a way that the completed Work will conform to the Contract Documents, Owner may order Contractor to stop the Work, or any portion thereof, until the cause for such order has been eliminated; however, this right of Owner to stop the Work shall not give rise to any duty on the part of Owner to exercise this right for the benefit of Contractor, any Subcontractor, any Supplier, any other individual or entity, or any surety for, or employee or agent of any of them.

13.06 *Correction or Removal of Defective Work*

A. Promptly after receipt of notice, Contractor shall correct all defective Work, whether or not fabricated, installed, or completed, or, if the Work has been rejected by Engineer, remove it from the Project and replace it with Work that is not defective. Contractor shall pay all claims, costs, losses, and damages (including but not limited to all fees and charges of engineers, architects, attorneys, and other professionals and all court or arbitration or other dispute resolution costs) arising out of or relating to such correction or removal (including but not limited to all costs of repair or replacement of work of others). Contractor shall have no claim for delay or disruption based upon the Engineer's reasonable actions under this paragraph.

B. When correcting defective Work under the terms of this Paragraph 13.06 or Paragraph 13.07, Contractor shall take no action that would void or otherwise impair Owner's special warranty and guarantee, if any, on said Work.

13.07 *Correction Period*

A. If within one year after the date of Substantial Completion (or such longer period of time as may be prescribed by the terms of any applicable special guarantee required by the Contract Documents) or by any specific provision of the Contract Documents, any Work is found to be defective, or if the repair of any damages to the land or areas made available for Contractor's use by Owner or permitted by Laws and Regulations as contemplated in Paragraph 6.11.A is found to be defective, Contractor shall promptly, without cost to Owner and in accordance with Owner's written instructions:

1. repair such defective land or areas; or

2. correct such defective Work; or

3. if the defective Work has been rejected by Owner, remove it from the Project and replace it with Work that is not defective, and

4. satisfactorily correct or repair or remove and replace any damage to other Work, to the work of others or other land or areas resulting therefrom.

B. If Contractor does not promptly comply with the terms of Owner's written instructions, or in an emergency where delay would cause serious risk of loss or damage, Owner may have the defective Work corrected or repaired or may have the rejected Work removed and replaced. All claims, costs, losses, and damages (including but not limited to all fees and charges of engineers, architects, attorneys, and other professionals and all court or arbitration or other dispute resolution costs) arising out of or relating to such correction or repair or such removal and replacement (including but not limited to all costs of repair or replacement of work of others) will be paid by Contractor.

C. In special circumstances where a particular item of equipment is placed in continuous service before Substantial Completion of all the Work, the correction period for that item may start to run from an earlier date if so provided in the Specifications.

D. Where defective Work (and damage to other Work resulting therefrom) has been corrected or removed and replaced under this Paragraph 13.07, the correction period hereunder with respect to such Work will be extended for an additional period of one year after such correction or removal and replacement has been satisfactorily completed.

E. Contractor's obligations under this Paragraph 13.07 are in addition to any other obligation or warranty. The provisions of this Paragraph 13.07 shall not be construed as a substitute for or a waiver of the provisions of any applicable statute of limitation or repose.

13.08 *Acceptance of Defective Work*

A. If, instead of requiring correction or removal and replacement of defective Work, Owner (and, prior to Engineer's recommendation of final payment, Engineer) prefers to accept it, Owner may do so. Contractor shall pay all claims, costs, losses, and damages (including but not limited to all fees and charges of engineers, architects, attorneys, and other professionals and all court or arbitration or other dispute resolution costs) attributable to Owner's evaluation of and determination to accept such defective Work (such costs to be approved by Engineer as to reasonableness) and the diminished value of the Work to the extent not otherwise paid by Contractor pursuant to this sentence. If any such acceptance occurs prior to Engineer's recommendation of final payment, a Change Order will be issued incorporating the necessary revisions in the Contract Documents with respect to the Work, and Owner shall be entitled to an appropriate decrease in the Contract Price, reflecting the diminished value of Work so accepted. If the parties are unable to agree as to the amount thereof, Owner may make a Claim therefor as provided in Paragraph 10.05. If the acceptance occurs after such recommendation, an appropriate amount will be paid by Contractor to Owner.

13.09 *Owner May Correct Defective Work*

A. If Contractor fails within a reasonable time after written notice from Engineer to correct defective Work or to remove and replace rejected Work as required by Engineer in accordance with Paragraph 13.06.A, or if Contractor fails to perform the Work in accordance with the Contract Documents, or if Contractor fails to comply with any other provision of the Contract Documents, Owner may, after seven days written notice to Contractor, correct or remedy any such deficiency.

B. In exercising the rights and remedies under this Paragraph 13.09, Owner shall proceed expeditiously. In connection with such corrective or remedial action, Owner may exclude Contractor from all or part of the Site, take possession

of all or part of the Work and suspend Contractor's services related thereto, take possession of Contractor's tools, appliances, construction equipment and machinery at the Site, and incorporate in the Work all materials and equipment stored at the Site or for which Owner has paid Contractor but which are stored elsewhere. Contractor shall allow Owner, Owner's representatives, agents and employees, Owner's other contractors, and Engineer and Engineer's consultants access to the Site to enable Owner to exercise the rights and remedies under this Paragraph.

C. All claims, costs, losses, and damages (including but not limited to all fees and charges of engineers, architects, attorneys, and other professionals and all court or arbitration or other dispute resolution costs) incurred or sustained by Owner in exercising the rights and remedies under this Paragraph 13.09 will be charged against Contractor, and a Change Order will be issued incorporating the necessary revisions in the Contract Documents with respect to the Work; and Owner shall be entitled to an appropriate decrease in the Contract Price. If the parties are unable to agree as to the amount of the adjustment, Owner may make a Claim therefor as provided in Paragraph 10.05. Such claims, costs, losses and damages will include but not be limited to all costs of repair, or replacement of work of others destroyed or damaged by correction, removal, or replacement of Contractor's defective Work.

D. Contractor shall not be allowed an extension of the Contract Times because of any delay in the performance of the Work attributable to the exercise by Owner of Owner's rights and remedies under this Paragraph 13.09.

ARTICLE 14 – PAYMENTS TO CONTRACTOR AND COMPLETION

14.01 *Schedule of Values*

A. The Schedule of Values established as provided in Paragraph 2.07.A will serve as the basis for progress payments and will be incorporated into a form of Application for Payment acceptable to Engineer. Progress payments on account of Unit Price Work will be based on the number of units completed.

14.02 *Progress Payments*

A. *Applications for Payments*

1. Not later than ten (10) days before the date established in the Agreement for each progress payment (but not more often than once a month), Contractor shall submit to Engineer for review an Application for Payment filled out and signed by Contractor covering the Work completed as of the date of the Application and accompanied by such supporting documentation as is required by the Contract Documents. If payment is requested on the basis of materials and equipment not incorporated in the Work but delivered and suitably stored at the Site or at another location agreed to in writing, the Application for Payment shall also be accompanied by a bill of sale, invoice, or other documentation indicating that the Contractor has either paid for such materials or equipment or warranting that Owner has received the materials and equipment free and clear of all Liens and evidence that the materials and equipment are covered by appropriate property insurance or other arrangements to protect Owner's interest therein, all of which must be satisfactory to Owner. The Contractor shall furnish evidence that payment received on the basis of materials and equipment not incorporated but delivered and suitably stored, has in fact been paid to the respective supplier(s) on submission of the next application for payment submitted by the Contractor. Failure to provide such evidence of payment shall result in the withdrawal of previous approval(s) and removal of the related equipment from the next submitted Application for Payment."

2. Beginning with the second Application for Payment, each Application shall include an affidavit of Contractor stating that all previous progress payments received on account of the Work have been applied on account to discharge Contractor's legitimate obligations associated with prior Applications for Payment.

3. The amount of retainage with respect to progress payments will be as stipulated in the Agreement.

B. *Review of Applications*

1. Engineer will, within 10 days after receipt of each Application for Payment, either indicate in writing a recommendation of payment and present the Application to Owner or return the Application to Contractor indicating in writing Engineer's reasons for refusing to recommend payment. In the latter case, Contractor may make the necessary corrections and resubmit the Application.

2. Engineer's recommendation of any payment requested in an Application for Payment will constitute a representation by Engineer to Owner, based on Engineer's observations on the Site of the executed Work as an experienced and qualified design professional and on Engineer's review of the Application for Payment and the accompanying data and schedules, that to the best of Engineer's knowledge, information and belief:

    a. the Work has progressed to the point indicated;

    b. the quality of the Work is generally in accordance with the Contract Documents (subject to an evaluation of the Work as a functioning whole prior to or upon Substantial Completion, to the results of any subsequent tests called for in the Contract Documents, to a final determination of quantities and classifications for Unit Price Work under Paragraph 9.07, and to any other qualifications stated in the recommendation); and

    c. the conditions precedent to Contractor's being entitled to such payment appear to have been fulfilled in so far as it is Engineer's responsibility to observe the Work.

3. By recommending any such payment Engineer will not thereby be deemed to have represented that:

    a. inspections made to check the quality or the quantity of the Work as it has been performed have been exhaustive, extended to every aspect of the Work in progress, or involved detailed inspections of the Work beyond the responsibilities specifically assigned to Engineer in the Contract Documents; or

    b. that there may not be other matters or issues between the parties that might entitle Contractor to be paid additionally by Owner or entitle Owner to withhold payment to Contractor.

4. Neither Engineer's review of Contractor's Work for the purposes of recommending payments nor Engineer's recommendation of any payment, including final payment, will impose responsibility on Engineer:

    a. to supervise, direct, or control the Work, or

    b. for the means, methods, techniques, sequences, or procedures of construction, or the safety precautions and programs incident thereto, or

    c. for Contractor's failure to comply with Laws and Regulations applicable to Contractor's performance of the Work, or

    d. to make any examination to ascertain how or for what purposes Contractor has used the moneys paid on account of the Contract Price, or

    e. to determine that title to any of the Work, materials, or equipment has passed to Owner free and clear of any Liens.

5. Engineer may refuse to recommend the whole or any part of any payment if, in Engineer's opinion, it would be incorrect to make the representations to Owner stated in Paragraph 14.02.B.2. Engineer may also refuse to recommend any such payment or, because of subsequently discovered evidence or the results of subsequent inspections or tests, revise or revoke any such payment recommendation previously made, to such extent as may be necessary in Engineer's opinion to protect Owner from loss because:

    a. the Work is defective, or completed Work has been damaged, requiring correction or replacement;

b. the Contract Price has been reduced by Change Orders;

c. Owner has been required to correct defective Work or complete Work in accordance with Paragraph 13.09; or

d. Engineer has actual knowledge of the occurrence of any of the events enumerated in Paragraph 15.02.A.

C. *Payment Becomes Due*

1. Not later than Twenty-five (25) days after the Application for Payment to the Owner is stamped as received by the City, the amount recommended by the Engineer, will (subject to the provisions of Paragraph 14.02.D) become due, and when due will be paid by Owner to Contractor.

2. If the Contractor and its Surety shall fail to pay any undisputed claims, made in writing to Owner within thirty (30) days after completion of the Work, but continuing unsatisfied for a period of ninety (90) days, Owner, at its sole discretion and option, may pay such undisputed claim and deduct the amount thereof from the balance due Contractor; if Owner deems such action to be in its best interests. Owner may also, with the written consent of Contractor and its Surety, use any monies retained, due, or to become due under this Contract for the purpose of paying for both labor and materials for the Work, for disputed claims or claims that have not been filed.

3. All monies paid by Owner in settlement of claims as set forth above, with the costs and expenses incurred by Owner in connection therewith, shall be charged to Contractor, shall bear interest at the then existing legal rate of interest under the laws of the State of Florida; and shall be deducted from the next payment due Contractor under the terms of this Contract.

D. *Reduction in Payment*

1. Owner may refuse to make payment of the full amount recommended by Engineer because:

a. claims have been made against Owner on account of Contractor's performance or furnishing of the Work;

b. Liens have been filed in connection with the Work, except where Contractor has delivered a specific bond satisfactory to Owner to secure the satisfaction and discharge of such Liens;

c. the Contractor's performance or furnishing of the Work is inconsistent with funding Agency requirements;

d. there are other items entitling Owner to a set-off against the amount recommended including but not limited to, the aggregation of liquidated damages; or

e. Owner has actual knowledge of the occurrence of any of the events enumerated in Paragraphs 14.02.B.5.a through 14.02.B.5.c or Paragraph 15.02.A.

2. If Owner refuses to make payment of the full amount recommended by Engineer, Owner will give Contractor immediate written notice (with a copy to Engineer) stating the reasons for such action and promptly pay Contractor any amount remaining after deduction of the amount so withheld. Owner shall promptly pay Contractor the amount so withheld, or any adjustment thereto agreed to by Owner and Contractor, when Contractor corrects to Owner's satisfaction the reasons for such action.

3. If it is subsequently determined that Owner's refusal of payment was not justified, the amount wrongfully withheld shall be treated as an amount due as determined by Paragraph 14.02.C.1.

14.03 *Contractor's Warranty of Title*

A. Contractor warrants and guarantees that title to all Work, materials, supplies and equipment covered by any Application for Payment, whether incorporated in the Project or not, will pass to Owner no later than the time of payment free and clear of all Liens. No materials or supplies for the Work shall be purchased subject to any security interest, or under a conditional sales contract or other agreement by which an interest is retained by the seller.

14.04 *Substantial Completion*

A. When Contractor considers the entire Work ready for its intended use Contractor shall notify Owner and Engineer in writing that the entire Work is substantially complete (except for items specifically listed by Contractor as incomplete) and request that Engineer issue a certificate of Substantial Completion.

B. Promptly after Contractor's notification, Owner, Agency, Contractor, and Engineer shall make a prefinal inspection of the Work to determine the status of completion. If Engineer does not consider the Work substantially complete, Engineer will notify Contractor in writing giving the reasons therefor.

C. If Engineer considers the Work substantially complete, Engineer will deliver to Owner a tentative certificate of Substantial Completion which shall fix the date of Substantial Completion. There shall be attached to the certificate a tentative list of items to be completed or corrected before final payment. In accordance with Florida Statutes Section §218.735, within 30 calendar days, or 45 days if over $10 million construction cost, of reaching substantial completion of the construction services, the Owner and Contractor shall work together to develop the single list of items and the estimated cost to complete each item on the list required to render complete, satisfactory, and acceptable the construction services purchased by the Owner. See also General Conditions Section 710 of the bid package, and Section 5 of the Contract, Payment ProceduresOwner shall have seven days after receipt of the tentative certificate during which to make written objection to Engineer as to any provisions of the certificate or attached list. If, after considering such objections, Engineer concludes that the Work is not substantially complete, Engineer will within 14 days after submission of the tentative certificate to Owner notify Contractor in writing, stating the reasons therefor. If, after consideration of Owner's objections, Engineer considers the Work substantially complete, Engineer will within said 14 days execute and deliver to Owner and Contractor a definitive certificate of Substantial Completion (with a revised tentative list of items to be completed or corrected) reflecting such changes from the tentative certificate as Engineer believes justified after consideration of any objections from Owner.

D. At the time of delivery of the tentative certificate of Substantial Completion, Engineer will deliver to Owner and Contractor a written recommendation as to division of responsibilities pending final payment between Owner and Contractor with respect to security, operation, safety, and protection of the Work, maintenance, heat, utilities, insurance, and warranties and guarantees. Unless Owner and Contractor agree otherwise in writing and so inform Engineer in writing prior to Engineer's issuing the definitive certificate of Substantial Completion, Engineer's aforesaid recommendation will be binding on Owner and Contractor until final payment.

E. Owner shall have the right to exclude Contractor from the Site after the date of Substantial Completion subject to allowing Contractor reasonable access to complete or correct items on the tentative list.

14.05 *Partial Utilization*

A. Prior to Substantial Completion of all the Work, Owner may use or occupy any substantially completed part of the Work which has specifically been identified in the Contract Documents, or which Owner, Engineer, and Contractor agree constitutes a separately functioning and usable part of the Work that can be used by Owner for its intended purpose without significant interference with Contractor's performance of the remainder of the Work, subject to the following conditions.

1. Owner at any time may request Contractor in writing to permit Owner to use or occupy any such part of the Work which Owner believes to be ready for its intended use and substantially complete. If and when Contractor agrees that such part of the Work is substantially complete, Contractor will certify to Owner and

Engineer that such part of the Work is substantially complete and request Engineer to issue a certificate of Substantial Completion for that part of the Work.

2. Contractor at any time may notify Owner and Engineer in writing that Contractor considers any such part of the Work ready for its intended use and substantially complete and request Engineer to issue a certificate of Substantial Completion for that part of the Work.

3. Within a reasonable time after either such request, Owner, Contractor, and Engineer shall make an inspection of that part of the Work to determine its status of completion. If Engineer does not consider that part of the Work to be substantially complete, Engineer will notify Owner and Contractor in writing giving the reasons therefor. If Engineer considers that part of the Work to be substantially complete, the provisions of Paragraph 14.04 will apply with respect to certification of Substantial Completion of that part of the Work and the division of responsibility in respect thereof and access thereto.

4. No use or occupancy or separate operation of part of the Work may occur prior to compliance with the requirements of Paragraph 5.10 regarding property insurance.

14.06 *Final Inspection*

A. Upon written notice from Contractor that the entire Work or an agreed portion thereof is complete, Engineer will promptly make a final inspection with Owner, Agency, and Contractor and will notify Contractor in writing of all particulars in which this inspection reveals that the Work is incomplete or defective. Contractor shall immediately take such measures as are necessary to complete such Work or remedy such deficiencies.

14.07 *Final Payment*

A. *Application for Payment*

1. After Contractor has, in the opinion of Engineer, satisfactorily completed all corrections identified during the final inspection and has delivered, in accordance with the Contract Documents, all maintenance and operating instructions, schedules, guarantees, bonds, certificates or other evidence of insurance certificates of inspection, marked-up record documents (as provided in Paragraph 6.12), and other documents, Contractor may make application for final payment following the procedure for progress payments.

2. The final Application for Payment shall be accompanied (except as previously delivered) by:

   a. all documentation called for in the Contract Documents, including but not limited to the evidence of insurance required by Paragraph 5.04.B.7;

   b. consent of the surety, if any, to final payment;

   c. a list of all Claims against Owner that Contractor believes are unsettled; and

   d. complete and legally effective releases or waivers (satisfactory to Owner) of all Lien rights arising out of or Liens filed in connection with the Work.

3. In lieu of the releases or waivers of Liens specified in Paragraph 14.07.A.2 and as approved by Owner, Contractor may furnish receipts or releases in full and an affidavit of Contractor that: (i) the releases and receipts include all labor, services, material, and equipment for which a Lien could be filed; and (ii) all payrolls, material and equipment bills, and other indebtedness connected with the Work for which Owner or Owner's property might in any way be responsible have been paid or otherwise satisfied. If any Subcontractor or Supplier fails to furnish such a release or receipt in full, Contractor may furnish a bond or other collateral satisfactory to Owner to indemnify Owner against any Lien.

4. Notwithstanding any other provision of these Contract Documents to the contrary, Owner and Engineer are under no duty or obligation whatsoever to any Subcontractor, laborer or other party to ensure that payments due and owing to any of them are or will be made. Such parties shall rely only on the Contractor's payment and performance bonds and the obligations of the Surety as remedy of nonpayment.

B. *Engineer's Review of Application and Acceptance*

1. If, on the basis of Engineer's observation of the Work during construction and final inspection, and Engineer's review of the final Application for Payment and accompanying documentation as required by the Contract Documents, Engineer is satisfied that the Work has been completed and Contractor's other obligations under the Contract Documents have been fulfilled, Engineer will, within ten days after receipt of the final Application for Payment, indicate in writing Engineer's recommendation of payment and present the Application for Payment to Owner for payment. At the same time Engineer will also give written notice to Owner and Contractor that the Work is acceptable subject to the provisions of Paragraph 14.09. Otherwise, Engineer will return the Application for Payment to Contractor, indicating in writing the reasons for refusing to recommend final payment, in which case Contractor shall make the necessary corrections and resubmit the Application for Payment.

C. *Payment Becomes Due*

1. Thirty days after the presentation to Owner of the Application for Payment and accompanying documentation, the amount recommended by Engineer, less any sum Owner is entitled to set off against Engineer's recommendation, including but not limited to liquidated damages, will become due and will be paid by Owner to Contractor.

14.08 *Final Completion Delayed*

A. If, through no fault of Contractor, final completion of the Work is significantly delayed, and if Engineer so confirms, Owner shall, upon receipt of Contractor's final Application for Payment (for Work fully completed and accepted) and recommendation of Engineer, and without terminating the Contract, make payment of the balance due for that portion of the Work fully completed and accepted. If the remaining balance to be held by Owner for Work not fully completed or corrected is less than the retainage stipulated in the Agreement, and if bonds have been furnished as required in Paragraph 5.01, the written consent of the surety to the payment of the balance due for that portion of the Work fully completed and accepted shall be submitted by Contractor to Engineer with the Application for such payment. Such payment shall be made under the terms and conditions governing final payment, except that it shall not constitute a waiver of Claims. The remaining balance of any sum included in the final Application for Payment but held by OWNER for Work not fully completed and accepted will become due when the Work is fully completed and accepted.

14.09 *Waiver of Claims*

A. The making and acceptance of final payment will constitute:

1. a waiver of all Claims by Owner against Contractor, except Claims arising from unsettled Liens, from defective Work appearing after final inspection pursuant to Paragraph 14.06, from failure to comply with the Contract Documents or the terms of any special guarantees specified therein, or from Contractor's continuing obligations under the Contract Documents; and

2. a waiver of all Claims by Contractor against Owner other than those previously made in accordance with the requirements herein and expressly acknowledged by Owner in writing as still unsettled.

ARTICLE 15 – SUSPENSION OF WORK AND TERMINATION

15.01 *Owner May Suspend Work*

A. At any time and without cause, Owner may suspend the Work or any portion thereof for a period of not more than 90 consecutive days by notice in writing to Contractor and Engineer which will fix the date on which Work will be resumed. Contractor shall resume the Work on the date so fixed. Contractor shall be granted an adjustment in the Contract Price or an extension of the Contract Times, or both, directly attributable to any such suspension if Contractor makes a Claim therefor as provided in Paragraph 10.05; however, if the Owner stops Work under Article 13.05 or suspends services under Article, or suspends the Work or any portion thereof because of the Contractor is endangering persons and property, the Contractor shall be entitled to no extension of Contract Time or increase in Contract Price."

15.02 *Owner May Terminate for Cause*

A. The occurrence of any one or more of the following events will justify termination for cause:

1. Contractor's persistent failure to perform the Work in accordance with the Contract Documents (including, but not limited to, failure to supply sufficient skilled workers or suitable materials or equipment or failure to adhere to the Progress Schedule established under Paragraph 2.07 as adjusted from time to time pursuant to Paragraph 6.04);or

2. If the Contractor assigns or delegates its duties under this Contract or any substantial part thereof without the previous written consent of Owner, or if the Contract or any claim thereunder shall be assigned by Contractor otherwise than as herein specified; or

3. Contractor's disregard of Laws or Regulations of any public body having jurisdiction; or

4. Contractor's material disregard of the authority and directives of the Engineer; or

5. Contractor's violation or material breach of any provisions of the Contract Documents; or

6. Contractor's abandonment of the Work to be done under this Contract.

B. If one or more of the events identified in Paragraph 15.02.A occur, Owner may, after giving Contractor (and surety) seven days written notice of its intent to terminate the services of Contractor:

1. exclude Contractor from the Site, and take possession of the Work and of all Contractor's tools, appliances, construction equipment, and machinery at the Site, and use the same to the full extent they could be used by Contractor (without liability to Contractor for trespass or conversion),

2. incorporate in the Work all materials and equipment stored at the Site or for which Owner has paid Contractor but which are stored elsewhere, and

3. complete the Work as Owner may deem expedient.

C. If Owner proceeds as provided in Paragraph 15.02.B, Contractor shall not be entitled to receive any further payment until the Work is completed. If the unpaid balance of the Contract Price exceeds all claims, costs, losses, and damages (including but not limited to all fees and charges of engineers, architects, attorneys, and other professionals and all court or arbitration or other dispute resolution costs) sustained by Owner arising out of or relating to completing the Work, such excess will be paid to Contractor. If such claims, costs, losses, and damages exceed such unpaid balance, Contractor shall pay the difference to Owner. Such claims, costs, losses, and damages incurred by Owner will be reviewed by Engineer as to their reasonableness and, when so approved by Engineer, incorporated in a Change Order. When exercising any rights or remedies under this Paragraph Owner shall not be required to obtain the lowest price for the Work performed.

D. Notwithstanding Paragraphs 15.02.B and 15.02.C, Contractor's services will not be terminated if Contractor begins within seven days of receipt of notice of intent to terminate to correct its failure to perform and proceeds diligently to cure such failure within no more than 30 days of receipt of said notice.

E. Where Contractor's services have been so terminated by Owner, the termination will not affect any rights or remedies of Owner against Contractor then existing or which may thereafter accrue. Any retention or payment of moneys due Contractor by Owner will not release Contractor from liability.

F. If and to the extent that Contractor has provided a performance bond under the provisions of Paragraph 5.01.A, the termination procedures of that bond shall supersede the provisions of Paragraphs 15.02.B, and 15.02.C.

15.03 *Owner May Terminate For Convenience*

A. Upon seven days written notice to Contractor and Engineer, Owner may, without cause and without prejudice to any other right or remedy of Owner, terminate the Contract. In such case, Contractor shall be paid for (without duplication of any items):

1. completed and acceptable Work executed in accordance with the Contract Documents prior to the effective date of termination, including fair and reasonable sums for overhead and profit on such Work;

2. expenses sustained prior to the effective date of termination in performing services and furnishing labor, materials, or equipment as required by the Contract Documents in connection with uncompleted Work, plus fair and reasonable sums for overhead and profit on such expenses;

3. all claims, costs, losses, and damages (including but not limited to all fees and charges of engineers, architects, attorneys, and other professionals and all court or arbitration or other dispute resolution costs) incurred in settlement of terminated contracts with Subcontractors, Suppliers, and others; and

4. reasonable expenses directly attributable to termination.

B. Contractor shall not be paid on account of loss of anticipated profits or revenue or other economic loss arising out of or resulting from such termination.

15.04 *Contractor May Stop Work or Terminate*

A. If, through no act or fault of Contractor, (i) the Work is suspended for more than 90 consecutive days by Owner or under an order of court or other public authority, or (ii) Engineer fails to act on any Application for Payment within 30 days after it is submitted, or (iii) Owner fails for 30 days to pay Contractor any sum finally determined to be due, then Contractor may, upon seven days written notice to Owner and Engineer, and provided Owner or Engineer do not remedy such suspension or failure within that time, terminate the Contract and recover from Owner payment on the same terms as provided in Paragraph 15.03.

B. In lieu of terminating the Contract and without prejudice to any other right or remedy, if Engineer has failed to act on an Application for Payment within 30 days after it is submitted, or Owner has failed for 30 days to pay Contractor any sum finally determined to be due, Contractor may, seven days after written notice to Owner and Engineer, stop the Work until payment is made of all such amounts due Contractor, including interest thereon. The provisions of this Paragraph 15.04 are not intended to preclude Contractor from making a Claim under Paragraph 10.05 for an adjustment in Contract Price or Contract Times or otherwise for expenses or damage directly attributable to Contractor's stopping the Work as permitted by this Paragraph.

ARTICLE 16 – DISPUTE RESOLUTION AND WAIVER OF TRIAL BY JURY

16.01 A. As a condition precedent to the filing of any suit or other legal proceeding, the parties shall endeavor to resolve claims, disputes or other matters in question by Mediation. Mediation shall be initiated by any party by serving a written request for same on the other party. The parties shall by mutual agreement select a Mediator within fifteen

(15) days of the date of the request for Mediation. If the parties cannot agree on the selection of a Mediator, then the owner shall select the Mediator, who, if selected solely by the Owner, shall be a Mediator certified by the Supreme Court of Florida. No suit or other legal proceeding shall be filed until the mediator declares an impasse, which declaration, in any event, shall be deemed as issued by the Mediator not later than sixty (60) days after the initial Mediation Conference. The CONTRACTOR will carry on the Work and maintain the progress schedule during any dispute. Venue for any litigation, at law or equity, shall lie exclusively in The Circuit Court of the Ninth Judicial Circuit Court in and for Orange County, Florida.

16.02 This Contract, or any provision hereof, shall be construed and interpreted, and any litigation arising therefrom, shall be governed by the laws of the State of Florida.

16.03 **The CONTRACTOR and OWNER waive trial by jury in any action, proceeding or claim which may be brought by either of the parties hereto against the other on any matters concerning or arising out of this Contract.**

ARTICLE 17 – MISCELLANEOUS

17.01 *Giving Notice*

A. Whenever any provision of the Contract Documents requires the giving of written notice, it will be deemed to have been validly given if:

1. delivered in person to the individual or to a member of the firm or to an officer of the corporation for whom it is intended, or

2. delivered at or sent by registered or certified mail, postage prepaid, to the last business address known to the giver of the notice.

3. Both the address given in the Bid Form upon which this Agreement is founded, and Contractor's office at or near the site of the Work are hereby designated as places to either of which notices, letters, and other communications to Contractor shall be certified, mailed, or delivered. The delivering at the above named place, or depositing in a postpaid wrapper directed to the first-named place, in any post office box regularly maintained by the U.S. Postal Department, of any notice, letter or other communication to Contractor shall be deemed sufficient service thereof upon Contractor; and the date of said service shall be the date of such delivery or mailing. The first-named address may be changed at any time by an instrument in writing, executed and acknowledged by Contractor, and delivered to Owner and Engineer. Nothing herein contained shall be deemed to preclude or render inoperative the service of any notice, letter, or other communication upon Contractor personally.

17.02 *Computation of Times*

A. When any period of time is referred to in the Contract Documents by days, it will be computed to exclude the first and include the last day of such period. If the last day of any such period falls on a Saturday or Sunday or on a day made a legal holiday by the law of the applicable jurisdiction, such day will be omitted from the computation.

17.03 *Cumulative Remedies*

A. The duties and obligations imposed by these General Conditions and the rights and remedies available hereunder to the parties hereto are in addition to, and are not to be construed in any way as a limitation of, any rights and remedies available to any or all of them which are otherwise imposed or available by Laws or Regulations, by special warranty or guarantee, or by other provisions of the Contract Documents. The provisions of this Paragraph will be as effective as if repeated specifically in the Contract Documents in connection with each particular duty, obligation, right, and remedy to which they apply.

17.04 *Survival of Obligations*

A. All representations, indemnifications, warranties, and guarantees made in, required by, or given in accordance with the Contract Documents, as well as all continuing obligations indicated in the Contract Documents, will survive final payment, completion, and acceptance of the Work or termination or completion of the Contract or termination of the services of Contractor.

17.05 *Headings*

A. Article and paragraph headings are inserted for convenience only and do not constitute parts of these General Conditions.

17.06 The form of all submittals, notices, change orders, and other documents permitted or required to be used or transmitted under the Contract Documents shall be determined by the Engineer. During the pre-construction meeting, the Engineer shall provide to the Contractor one set of such project administration forms to be utilized during the construction of this project. These forms are referenced as:

<u>Forms Used by the Engineer and/or Owner's Representative</u>

00844 Non-compliance Notice
00845 Field Order
00847 Request for Proposed Change
00848 Daily Construction Report
00849 Weekly Construction Progress Report

<u>Forms Used by the Contractor</u>

00861 Periodic Estimate for Partial Payment
00862 Certificate of Engineer
00863 Certificate of Final Completion
00864 Shop Drawing Submittal
00865 Certificate of Final Inspection
00868 Contractor Request for Information
00878 Contractor Proposed Change
00879 Waiver and Release of Lien upon Final Payment
00881 Waiver and Release of Lien upon Progress Payment
00883 Contractor's Final Affidavit
00885 Contractor's Interim Affidavit

<u>Forms Used by All Parties during Construction</u>

00850 Construction Accident Report

17.07 The Contractor shall comply with Florida's Archives and Historical Act (Florida Statutes Chapter 267) and the regulations of the local historic preservation board as applicable and protect against the potential loss or destruction of significant, historical or archaeological data, sites, and properties in connection with the project.

17.08 If apprentices are required or utilized on this project, then the provisions of Chapter 446, Florida Statutes, shall govern.

17.09 If the price of this Agreement/Contract equals or exceeds $50,000 and if the Contractor has 50 or more employees, the Contractor shall file with the Owner, within 30 calendar days after the award of this Agreement/Contract, a report on Standard Form 100 (EEO-1), which has been promulgated jointly by the Office of Federal Contract Compliance Programs, the Equal Employment Opportunity Commission, and Plans for Progress, unless the Contractor has submitted such a report within 12 months preceding the date of award of this Agreement/Contract. In addition, the

Contractor shall ensure that each construction subcontractor having 50 or more employees and a lower-tier construction subcontract with a price equaling or exceeding $50,000 also files with the Owner, within 30 calendar days after the award to it of the lower-tier construction subcontract, a report on Standard Form 100 (EEO-1) unless the construction subcontractor has submitted such a report within 12 months preceding the date of award of the lower-tier construction subcontract. (Subsequent reports are to be submitted annually in accordance with 41 CFR 60-1.7(a) or at such other intervals as the Director of the Office of Federal Contract Compliance Programs may require.)

ARTICLE 18 – FEDERAL REQUIREMENTS

18.01 *Financing Agency Not a Party*

A. This Contract may be funded in part with funds provided by a State or Federal Agency. Neither State or Federal Agency, nor any of its departments, entities, or employees is a party to this Contract. All procurements by Federal Grant recipients and sub-recipients shall comply with the provisions of 2 C.F.R. Section 200.317 – 327.

18.02 *Contract Approval*

A. Owner and Contractor will furnish Owner's attorney such evidence as required so that Owner's attorney can complete and execute the following "Certificate of Owner's Attorney" (Exhibit GC-A) before Owner submits the executed Contract Documents to Agency for approval.

B. Concurrence by Agency in the award of the Contract is required before the Contract is effective.

18.03 *Conflict of Interest*

A. Contractor may not knowingly contract with a supplier or manufacturer if the individual or entity who prepared the plans and specifications has a corporate or financial affiliation with the supplier or manufacturer.

B. Owner's officers, employees, or agents shall not engage in the award or administration of this Contract if a conflict of interest, real or apparent, would be involved. Such a conflict would arise when: (i) the employee, officer or agent; (ii) any member of their immediate family; (iii) their partner or (iv) an organization that employs, or is about to employ, any of the above, has a financial interest in Contractor. Owner's officers, employees, or agents shall neither solicit nor accept gratuities, favors or anything of monetary value from Contractor or subcontractors.

18.04 *Gratuities*

A. If Owner finds after a notice and hearing that Contractor, or any of Contractor's agents or representatives, offered or gave gratuities (in the form of entertainment, gifts, or otherwise) to any official, employee, or agent of Owner or Agency in an attempt to secure this Contract or favorable treatment in awarding, amending, or making any determinations related to the performance of this Contract, Owner may, by written notice to Contractor, terminate this Contract. Owner may also pursue other rights and remedies that the law or this Contract provides. However, the existence of the facts on which Owner bases such findings shall be an issue and may be reviewed in proceedings under the dispute resolution provisions of this Contract.

B. In the event this Contract is terminated as provided in paragraph 18.04.A, Owner may pursue the same remedies against Contractor as it could pursue in the event of a breach of this Contract by Contractor. As a penalty, in addition to any other damages to which it may be entitled by law, Owner may pursue exemplary damages in an amount (as determined by Owner) which shall not be less than three nor more than ten times the costs Contractor incurs in providing any such gratuities to any such officer or employee.

18.05 *Audit and Access to Records*

A. For all negotiated contracts and negotiated modifications (except those of $10,000 or less), Owner, Agency, the Comptroller General, or any of their duly authorized representatives, shall have access to any books, documents,

papers, and records of the Contractor, which are pertinent to the Contract, for the purpose of making audits, examinations, excerpts and transcriptions. Contractor shall maintain all required records for three years after final payment is made and all other pending matters are closed.

18.06 *Small, Minority and Women's Businesses*

A. If Contractor intends to let any subcontracts for a portion of the work, Contractor shall take affirmative steps to assure that small, minority and women's businesses are used when possible as sources of supplies, equipment, construction, and services. Affirmative steps shall consist of: (1) including qualified small, minority and women's businesses on solicitation lists; (2) assuring that small, minority and women's businesses are solicited whenever they are potential sources; (3) dividing total requirements when economically feasible, into small tasks or quantities to permit maximum participation of small, minority, and women's businesses; (4) establishing delivery schedules, where the requirements of the work permit, which will encourage participation by small, minority and women's businesses; (5) using the services and assistance of the Small Business Administration and the Minority Business Development Agency of the U.S. Department of Commerce; (6) requiring each party to a subcontract to take the affirmative steps of this section; and (7) Contractor is encouraged to procure goods and services from labor surplus area firms.

18.07 *Anti-Kickback*

A. Contractor shall comply with the Copeland Anti-Kickback Act (18 USC 874 and 40 USC 276c) as supplemented by Department of Labor regulations (29 CFR Part 3, "Contractors and Subcontractors on Public Buildings or Public Works Financed in Whole or in Part by Loans or Grants of the United States"). The Act provides that Contractor or subcontractor shall be prohibited from inducing, by any means, any person employed in the construction, completion, or repair of public facilities, to give up any part of the compensation to which they are otherwise entitled. Owner shall report all suspected or reported violations to Agency.

18.08 *Clean Air and Pollution Control Acts*

A. If this Contract exceeds $100,000, Contractor shall comply with all applicable standards, orders or regulations issued pursuant to the Clean Air Act (42 USC 7401 *et seq.*) and the Federal Water Pollution Control Act as amended (33 USC 1251 *et seq*.). Contractor will report violations to the Agency and the Regional Office of the EPA.

18.09 *State Energy Policy*

A. Contractor shall comply with the Energy Policy and Conservation Act (P.L. 94-163). Mandatory standards and policies relating to energy efficiency, contained in any applicable State Energy Conservation Plan, shall be utilized.

18.10 *Equal Opportunity Requirements*

A. If this Contract exceeds $10,000, Contractor shall comply with Executive Order 11246, "Equal Employment Opportunity," as amended by Executive Order 11375, "Amending Executive Order 11246 Relating to Equal Employment Opportunity," and as supplemented by regulations at 41 CFR part 60, "Office of Federal Contract Compliance Programs, Equal Employment Opportunity, Department of Labor."

B. Contractor's compliance with Executive Order 11246 shall be based on its implementation of the Equal Opportunity Clause, specific affirmative active obligations required by the Standard Federal Equal Employment Opportunity Construction Contract Specifications, as set forth in 41 CFR Part 60-4 and its efforts to meet the goals established for the geographical area where the Contract is to be performed. The hours of minority and female employment and training must be substantially uniform throughout the length of the Contract, and in each trade, and Contractor shall make a good faith effort to employ minorities and women evenly on each of its projects. The transfer of minority or female employees or trainees from Contractor to Contractor or from project to project for the sole purpose of meeting Contractor's goals shall be a violation of the Contract, the Executive Order, and the

regulations in 41 CFR Part 60-4. Compliance with the goals will be measured against the total work hours performed.

C. Contractor shall provide written notification to the Director of the Office of Federal Contract Compliance Programs within 10 working days of award of any construction subcontract in excess of $10,000 at any tier for construction work under the Contract resulting from this solicitation. The notification shall list the name, address, and telephone number of the subcontractor; employer identification number; estimated dollar amount of subcontract; estimated starting and completion dates of the subcontract; and the geographical area in which the Contract is to be performed.

18.11 *Restrictions on Lobbying*

A. Contractor and each subcontractor shall comply with Restrictions on Lobbying (Public Law 101-121, Section 319) as supplemented by applicable Agency regulations. This Law applies to the recipients of contracts and subcontracts that exceed $100,000 at any tier under a Federal loan that exceeds $150,000 or a Federal grant that exceeds $100,000. If applicable, Contractor must complete a certification form on lobbying activities related to a specific Federal loan or grant that is a funding source for this Contract. Each tier certifies to the tier above that it will not and has not used Federal appropriated funds to pay any person or organization for influencing or attempting to influence an officer or employee of any agency, a member of Congress, or an employee of a member of Congress in connection with obtaining any Federal contract, grant, or any other award covered by 31 USC 1352. Each tier shall disclose any lobbying with non-Federal funds that takes place in connection with obtaining any Federal award. Certifications and disclosures are forwarded from tier to tier up to the Owner. Necessary certification and disclosure forms shall be provided by Owner.

18.12 *Environmental Requirements*

A. When constructing a project involving trenching and/or other related earth excavations, Contractor shall comply with the following environmental constraints:

1. Wetlands – When disposing of excess, spoil, or other construction materials on public or private property, Contractor shall not fill in or otherwise convert wetlands.

2. Floodplains – When disposing of excess, spoil, or other construction materials on public or private property, Contractor shall not fill in or otherwise convert 100 year floodplain areas delineated on the latest Federal Emergency Management Agency Floodplain Maps, or other appropriate maps, i.e., alluvial soils on NRCS Soil Survey Maps.

3. Historic Preservation – Any excavation by Contractor that uncovers an historical or archaeological artifact shall be immediately reported to Owner and a representative of Agency. Construction shall be temporarily halted pending the notification process and further directions issued by Agency after consultation with the State Historic Preservation Officer (SHPO).

4. Endangered Species – Contractor shall comply with the Endangered Species Act, which provides for the protection of endangered and/or threatened species and critical habitat. Should any evidence of the presence of endangered and/or threatened species or their critical habitat be brought to the attention of Contractor, Contractor will immediately report this evidence to Owner and a representative of Agency. Construction shall be temporarily halted pending the notification process and further directions issued by Agency after consultation with the U.S. Fish and Wildlife Service.

SECTION 00840
NOTICE OF AWARD

PART 1 - GENERAL

1.01 INSTRUCTIONS FOR NOTICE OF AWARD

A. The Notice of Award notifies the Contractor that the City Commission has awarded the bid to your company. The Notice of Award contains specific instructions on the requirements for the contract documents and pre-construction meeting.

B. The Notice of Award will be accompanied by the contract. The Contractor will sign the contract documents and return along with the required insurance certificate, and performance and payment bonds, if required, and any other documents required to finalize the contract documents.

END OF SECTION

SECTION 00841

NOTICE TO PROCEED

PART 1 - GENERAL

1.01 INSTRUCTIONS FOR NOTICE TO PROCEED

A. Upon receipt of all signed contract documents, including certificate of insurance, and recorded performance and payment bonds, the City will issue a Notice to Proceed.

B. The Notice to Proceed will contain the start date, substantial completion, and final completion dates for the project.

C. Contractor to acknowledge receipt of the Notice to Proceed. The Notice to Proceed will become part of the contract documents.

END OF SECTION

SECTION 00842
CHANGE ORDER

PART 1 - GENERAL

1.01 INSTRUCTIONS FOR CHANGE ORDER

A. In the event that a change, modification, deletion and/or increase in material, labor, and/or equipment is needed or requested by the City, the City may seek pricing and/or credit from the Contractor.

B. If pricing is acceptable by the Engineer, City shall prepare either Form 00842a or Form 00842b "CHANGE ORDER" located in Division 4 – Miscellaneous Forms, and obtain necessary authorization from either the City Manager or City Commission, whichever is applicable, based on approving authority.

C. Change Order will be executed by Contractor and amended into the contract documents.

END OF SECTION

SECTION 00843
CERTIFICATE OF SUBSTANTIAL COMPLETION

PART 1 - GENERAL

1.01 INSTRUCTIONS FOR CERTIFICATE OF SUBSTANTIAL COMPLETION

A. Upon final inspection and correction of deviations, the City shall prepare Form 00843 "CERTIFICATE OF SUBSTANTIAL COMPLETION", located in Division 4 – Miscellaneous Forms; where upon execution, the Contractor of the project shall be considered "Substantially Completed."

END OF SECTION

SECTION 00844
NON-COMPLIANCE NOTICE

PART 1 - GENERAL

1.01 INSTRUCTIONS FOR NON-COMPLIANCE NOTICE

A. If the Engineer determines the work and/or operations of the Contractor are not in compliance with the Contract document, and/or are being completed in an unsafe or dangerous manner, the Engineer shall provide written notification using Form 00844 "NON-COMPLIANCE NOTICE", located in Division 4 – Miscellaneous Forms.

B. Contractor shall respond to the "Non-Compliance Notice" within 24 hours with the assertion that the unsafe or dangerous circumstance will be corrected immediately.

END OF SECTION

SECTION 00845
FIELD ORDER & DIRECTIVE

PART 1 - GENERAL

1.01 INSTRUCTIONS FOR FIELD ORDER - DIRECTIVE

A. Contractor may request and/or City may provide field directives as needed, by the City providing the Contractor with a written directive, utilizing Form 00845 "FIELD ORDER/DIRECTIVE", as located in Division 4 – Miscellaneous Forms.

B. Written directive shall not be a change that affects the Contract amount, unless an approved Change Order is authorized.

END OF SECTION

SECTION 00847
REQUEST FOR PROPOSED CHANGE

PART 1 - GENERAL

1.01 INSTRUCTIONS FOR REQUEST FOR PROPOSED CHANGE

A. The City, requesting a change to the Contract, including but not limited to, material, labor, and/or equipment, shall prepare Section A of Form 00847 "REQUEST FOR PROPOSED CHANGE" located in Division 4 – Miscellaneous Forms and provide to Contractor.

B. Contractor shall submit proposal within seven (7) days of receipt of completed Section A of Form 00847 "REQUEST FOR PROPOSED CHANGE", including all supporting information needed by the Contractor in developing a complete proposal.

C. Upon obtaining acceptable proposal from Contractor, the Engineer shall complete Section B of Form 00847 "REQUEST FOR PROPOSED CHANGE" and seek the applicable approval based on City Authorization Authority.

END OF SECTION

SECTION 00848
DAILY CONSTRUCTION REPORT

PART 1 - GENERAL

1.01 INSTRUCTIONS FOR DAILY CONSTRUCTION REPORT

A. The Engineer or his representative shall on a daily basis review progress of the project, this includes work completed, and shall measure/confirm daily items for payment.

B. The Engineer or his representative shall record the Contractor's daily efforts, important issues, weather affecting the Contractor's efforts, Contractor personnel and equipment needed for daily operations, and measure/confirm daily items for payment in Form 00848 "Daily Construction Report" (TDR), located in Division 4 – Miscellaneous Forms.

C. The Engineer or his representative shall maintain an ongoing summary of work to date based on the confirmed TDRs that shall be used for completion of the payment application per Section 00861.

END OF SECTION

SECTION 00861
APPLICATION AND CERTIFICATION FOR PAYMENTS

PART 1 - GENERAL

1.01 INSTRUCTIONS FOR APPLICATION AND CERTIFICATION FOR PAYMENTS

A. To initiate a partial payment, the Contractor shall request completed Form 00861A "Application for Payment" and Form 00861B "Summary of Values to Date" located in Division 4 – Miscellaneous Forms from the City. The Contractor's request shall include the end date for the partial payment period.

B. City shall provide completed "Application for Payment" and "Summary of Values to Date" forms for Contractor's use.

C. Contractor shall cover "Application for Payment" and "Summary of Values to Date" forms with fully executed Form 00861C "Contractor's Certification of Payment" located in Division 4 – Miscellaneous Forms for every pay request.

END OF SECTION

SECTION 00863
CONTRACTOR'S FINAL RELEASE OF LIEN

PART 1 - GENERAL

1.01 INSTRUCTIONS FOR FINAL RELEASE OF LIEN

A. Contractor shall complete and submit Form 00863 "FINAL RELEASE OF LIEN" located in Division 4 – Miscellaneous Forms including any required supporting information and/or release(s).

END OF SECTION

SECTION 00864
SHOP DRAWING SUBMITTAL

PART 1 - GENERAL

1.01 INSTRUCTIONS FOR SHOP DRAWING SUBMITTAL FORM

A. Contractor shall provide cover on all shop submittals using Form 00864 "SHOP DRAWING SUBMITTAL FORM" located in Division 4 – Miscellaneous Forms for City approval, denial or corrections.

B. City shall provide copy of cover back with submittals for Contractor use, and if applicable, corrections.

END OF SECTION

SECTION 00865
CERTIFICATE OF FINAL INSPECTION

PART 1 - GENERAL

1.01 INSTRUCTIONS FOR CERTIFICATE OF FINAL INSPECTION

A. City shall acknowledge the occurrence of a final inspection by City staff and the Contractor by completing and providing Form 00865 "CERTIFICATE OF FINAL INSPECTION" located in Division 4 – Miscellaneous Forms. Attached to the form shall be a list of outstanding items needing completion.

END OF SECTION

SECTION 00868
CONTRACTOR'S REQUEST FOR INFORMATION

PART 1 - GENERAL

1.01 INSTRUCTIONS FOR CONTRACTOR REQUEST FOR INFORMATION

A. During the project Contractor may want more information or detail from the project designer and/or Engineer. Contractor shall request the information by completing Form 00868 "Contractor Request for Information" located in Division 4 – Miscellaneous Forms.

B. City shall complete second half of form and provide copy back to Contractor with any supporting information needed to complete the request.

END OF SECTION

SECTION 00879
WAIVER AND RELEASE OF LIEN
UPON FINAL PAYMENT

PART 1 - GENERAL

1.01 INSTRUCTIONS FOR WAIVER AND RELEASE OF LIEN UPON FINAL PAYMENT

A. The Contractor shall obtain and provide originals of the completed Form 00879 "Waiver and Release of Lien Upon Final Payment", located in Division 4 – Miscellaneous Forms, from each vendor, sub-consultant and/or material supplier that provided notice to the City and/or the Contractor.

END OF SECTION

SECTION 00881
WAIVER AND RELEASE OF LIEN
UPON PROGRESS PAYMENT

PART 1 - GENERAL

1.01 INSTRUCTIONS FOR WAIVER AND RELEASE OF LIEN UPON PROGRESS PAYMENT

A. The Contractor shall obtain and provide originals of completed Form 00881 "Waiver and Release of Lien Upon Progress Payment", located in Division 4 – Miscellaneous Forms, from each vendor, sub-consultant and/or material supplier that provided notice to the City and/or the contractor.

END OF SECTION

SECTION 00883
CONTRACTOR'S FINAL AFFIDAVIT

PART 1 - GENERAL

1.01 INSTRUCTIONS FOR CONTRACTOR'S FINAL AFFIDAVIT

A. Contractor shall execute and submit to the Engineer Form 00883 "Contractor's Final Affidavit" located in Division 4 – Miscellaneous Forms.

END OF SECTION

SECTION 00885
CONTRACTOR'S INTERIM AFFIDAVIT

PART 1 - GENERAL

1.01 INSTRUCTIONS FOR CONTRACTOR'S INTERMIN AFFIDAVIT

A. Contractor shall execute and submit to the Engineer Form 00885 "Contractor's Interim Affidavit" located in Division 4 – Miscellaneous Forms.

END OF SECTION

SECTION 00900
ADDENDA(S)

PART 1 - GENERAL

1.01 INSTRUCTIONS FOR CERTIFICATE OF SUBSTANTIAL COMPLETION

A. All Addenda issued during the bidding phase (before bid opening) and mutually agreed upon after bid opening shall be attached to Section 00900, Addenda(s) and shall be part of the contract documents.

SECTION 01001

GENERAL REQUIREMENTS

1.01 WORK UNDER THIS CONTRACT

A. SCOPE OF WORK

The W. Oakland Ave Reconstruction Project is a complete demolition and reconstruction of W. Oakland Ave between Taylor St. and S. Bluford Ave. The new roadway will consist of a two-way street divided by a 22-foot median with a 12-foot trail in the center of the median. The construction includes curb and gutter, new 12-foot asphalt roadway lanes, reconstructed stormwater system, potable water improvements, gravity sewer improvements, brick on-street parking, and 8-foot widewalks. Pipe diameters for the stormwater system include 24-inch RCP, 42-inch RCP, and 34”x53” ERCP as shown in the Drawings and listed in the Invitation to Bid. This project also includes the installation of a 6” PVC conduit for future underground power conversion. Finally, the project shall include removal of existing City utilities, roadway reconstruction, removal and replacement of driveways and curb, sidewalk, and sodding and other restoration as may be required.

B. OWNER'S REPRESENTATIVE FOR CONTRACT ADMINISTRATION

Notice is hereby served that the City of Ocoee – Public Works Department with respect to project design (i.e. Drawings and Specifications) is the Owner’s Representative. In conformance with the requirements of Notice and Service of the General Conditions, all notices or other papers required to be delivered by the Contractor to the Owner shall be delivered to the Attention of the Public Works Director, 1 North Bluford Avenue, Ocoee, FL 34761 Attn: Mr. Steve Krüg. The Public Works Department shall provide limited construction administration services for this project with respect to design related issues, and acceptance of materials and workmanship. Such limited construction administration services are provided solely to evaluate the Contractor′s work for compliance with the contract documents and shall not be effective to assign to the Engineer any duty to supervise or direct the performance of the work, nor create any responsibility for acts or omissions of the Contractor or any subcontractor or supplier.

C. STANDARD DOCUMENTS

AA	Aluminum Association
AASHTO or AASHO	American Association of State Highway and Transportation Officials
ABPA	Acoustical and Board Products Association
ACI	American Concrete Institute
AFBMA	Anti-Friction Bearing Manufacturer's Association
AGA	American Gas Association
AGMA	American Gear M(03/20/00ers Association
AI	The Asphalt Institute
AIA	American Institute of Architects

AIEE	American Institute of Electrical Engineers
AIMA	Acoustical and Insulating Materials Association
AISC	American Institute of Steel Construction
AISI	American Iron and Steel Institute
AMCA	American Moving and Conditioning Association
ANSI	American National Standards Institute
API	American Petroleum Institute
APWA	American Public Works Association
AREA	American Railway Engineering Association
ASA	American Standards Association (now ANSI)
ASCE	American Society of Civil Engineers
ASHRAE	American Society of Heating, Refrigerating, and Air Conditioning Engineers
ASME	American Society of Mechanical Engineers
ASSCBC	American Standard Safety Code for Building Construction
ASTM	American Society for Testing and Materials
AWPA	American Wood Preservers Association
AWBP	American Wood Preservers Board
AWS	American Welding Society
AWWA	American Water Works Association
CRSI	Concrete Reinforcing Steel Institute
CS	Commercial Standard
DOT	Spec Standard Specification for Road and Bridge Construction Florida Department of Transportation
FS	Federal Standard
IEEE	Institute of Electrical and Electronic Engineers
IPCEA	Insulated Power Cable Engineers Association
NBFU	National Board of Fire Underwriters
NBS	National Bureau of Standards
NEC	National Electrical Code
NECA	National Electrical Contractor's Association
NEMA	National Electrical Manufacturers Association
NFPA	National Fire Protection Association
NPT	National Pipe Threads
NSF	National Science Foundation
OSHA	U.S. Department of Labor, Occupational Safety and Health Administration
PCA	Portland Cement Association
PCI	Prestressed Concrete Institute
PS	United States Products Standards
SAE	Society of Automotive Engineers
SDI	Steel Decks Institute
SJI	Steel Joists Institute
SMACNA	Sheet Metal and Air Conditioning Contractors National Association
SSPC	Structural Steel Painting Council
UL	Underwriter's Laboratories, Inc.
UASI or USAS	United States of American Standards Institute (Now ANSI)

When obtaining data and information from the Drawings, conflicts, errors, and discrepancies shall be resolved from the documents given the following order of precedence:

a. Agreement Modifications
b. Agreement
c. Change Orders
d. Addenda
e. Supplementary Conditions
f. Instructions to Bidders
g. General Conditions
h. General Requirements
i. Measure and Payment
j. Utility Technical Specifications
   City of Ocoee Utilities Administration Building Technical Specification
   (Div. 2 through 15)
k. FDOT Standard Plans for Road and Bridge Construction, FY2023-24 Edition including supplements and revisions thereto
l. Drawings
   1) Dimensions
   2) Full-size Drawing
   3) Large-scale Drawing
   4) Small-scale Drawing
m. FDOT Roadway and Traffic Design Standards, FY2017-18.
n. Advertisement for Bids
o. Bid
p. Bonds
q. Insurance Certificates
r. Insurance Endorsements
s. Affidavits

When measurements are affected by conditions already established or where items are to be fitted into constructed conditions, it shall be the Contractor's responsibility to verify all such dimensions at the site and the actual job dimensions shall take precedence over scale and figure dimensions on the Drawings.

D. PRESERVATION OF PROPERTY

1. General

The Contractor shall preserve from damage all property along the line of work, or which is in the vicinity of or is in any way affected by the work, the removal or destruction of which is not called for by the plans. This applies to public and private property, public and private utilities (except as called for in the Drawings), trees, shrubs, crops, signs, monuments, fences, guardrail, pipe and underground structures, public highways (except natural wear and tear of highway resulting

from legitimate use thereof by the Contractor), etc., and whenever such property is damaged due to the activities of the Contractor it shall be immediately restored to a condition similar or equal to that existing before such damage or injury was done by the Contractor, and at his own expense, or he shall make good such damage or injury in an acceptable manner.

The Contractor shall protect existing bridges during the entire construction period, from damage caused by any of his operations or equipment. The Contractor will not be required to provide routine repairs or maintenance for such structures but will be required, at his own expense, to make immediate repairs of any damage occasioned by his use or operations. In the event that the Contractor's use or operations result in damage to a bridge requiring repairs, such repairs shall have a prior right to any equipment, materials or labor at the Contractor's disposal.

The Contractor's special attention is directed to the protection of any geodetic monument, horizontal or vertical, located within the limits of construction.

2. Failure to Restore Damaged Property

In case of failure on the part of the Contractor to restore such property, bridge, road or street, or to make good such damage or injury, the City/Engineer may, upon 48 hours notice, proceed to repair, rebuild or otherwise restore such property, road or street as may be deemed necessary, and the cost thereof will be deducted from any monies due or which may become due the Contractor under the contract. Nothing in this clause shall prevent the Contractor from receiving proper compensation for the removal, damage or replacement of any public or private property, not shown on the plans, which is made necessary by alteration of grade or alignment and such work is authorized by the Engineer; provided that such property has not been damaged through fault of the Contractor, his employees or agents.

3. Utilities

a. Arrangements for Protection or Adjustment: At points where the Contractor's operations are adjacent to utility facilities or other property, damage to which might result in expense, loss, disruption of service or other undue inconvenience to the public or to the owners, work shall not be commenced until all arrangements necessary for the protection thereof have been made. The Contractor shall be solely and directly responsible to the owners and operators of such properties for any damage, injury, expense, loss, inconvenience, or delay, caused by the Contractor's operations.

Adjustments to the utilities will be performed by the utility owners. The Contractor will make the necessary arrangements with utility owners for removal or adjustment of utilities where such removal or adjustment is

determined by the Engineer to be essential to the performance of the required construction, provided normal construction procedures are used by the Contractor. Relocations or adjustments requested only on the basis of the Contractor's proposed use of a particular method of construction or a particular type of equipment will not be considered as being essential to the construction of the project if other commonly used methods and equipment could be used without the necessity of relocating or adjusting the utility. The Engineer will determine the responsibility for any such required adjustments of utilities. Relocations or adjustments requested because of delivery to the job of materials furnished by the Contractor will be the responsibility of and at the expense of the Contractor.

Circumstances under which it will be considered essential to remove or adjust (or to otherwise protect) utilities in order to construct the project shall include, but not be limited to, the following:

1) Utilities lying within the vertical and horizontal construction limits, plus the reasonably required working room necessary for operation of equipment normally used for the particular type of construction; all as determined by the Engineer (and except as provided in paragraph 4), below). (In the case of overhead electrical conductors which carry more than 400 V, a minimum of 10 foot clearance between the conductor and the nearest possible approach of any part of the equipment will be required, except where the utility owner effects safeguards approved by the Florida Department of Labor and Employment Security.)

2) Utilities lying within the horizontal limits of the project and within 12-inches below the ground surface or the excavation surface on which the construction equipment is to be operated, or within 12-inches below the bottom of any stabilizing course called for on the plans.

3) Utilities lying within the normal limits of excavation for underground drainage facilities or other structures (except as provided in paragraph 4) below). Such normal limits shall extend to side slopes along the angle of repose, as established by sound engineering practice, unless the sides of the excavation are required by the plans or special provisions to be supported by sheeting, or the Contractor elects to sheet such excavation for his own convenience.

4) Where utilities cross pipe trenches transversely within the excavation area, but not within positions from which relocation or removal is necessary, the utility owner shall be responsible for providing and effecting all reasonable measures for their support and protection during construction operations, and the Contractor shall cooperate with the utility owner in the owner's effecting such support and protective

measures. The Contractor shall be responsible for any damage to the utility that is caused by neglect or failure on the Contractor's part to cooperate and to use proper precaution in performing his work.

In the event that a temporary relocation of a utility or a particular sequence of timing in the relocation of a utility is necessary, such relocation shall be done only as directed by the Engineer, so as to cause the least impediment to the overall construction operations. The Owner will not assume responsibility for utility adjustments or temporary relocation work, nor for the conditions resulting there from, where such adjustments are (1) not necessitated by the construction of the project, (2) done solely for the benefit or convenience of the utility owner or its contractor, or the contractor where his construction procedures are considered to be other than normal, or (3) not shown on the approved plans for the utilities relocation or the construction.

b. Cooperation and coordination of schedules with Utility Owners: The Contractor shall cooperate with the Owners of any underground and coordination of schedules or overhead utility lines in their removal and rearrangement operations in order that these operations may progress in a reasonable manner, that duplication or rearrangement work may be reduced to a minimum, and that services rendered by the utility owners will not be unnecessarily interrupted. Contractor shall be responsible for coordinating its activities with those of the Utility Owners and shall incorporate their work into Contractor's Construction Schedules.

Owner shall not be liable to the Contractor for any loss damage, cost or expense arising out of or resulting from delay, interference, interruption, or acceleration of Contractor's Work by any of the activities of the Utility Owners.

In the event of interruption of water or other utility services as a result of accidental breakage or as a result of their being exposed or unsupported, the Contractor shall promptly notify the proper authority and shall cooperate with the authority in the prompt restoration of service. If water service is interrupted repair work shall be continuous until the service is restored. No work shall be undertaken around fire hydrants until provisions for continued service have been approved by the local fire authority.

c. Utility Adjustments: Certain utility adjustments and reconstruction work may be underway during the progress of the contract. The Contractor will be required to cooperate as is necessary with the various utility construction crews in order that utility service may be maintained. Upon completion of the utilities work by others the utilities will be in their final location and the Contractor shall exercise due caution when working adjacent to such utilities.

Any damage to the relocated utilities resulting from the Contractor's operations shall be repaired at his expense.

Utility authorities that may be performing adjustments, connections, and reconstruction work during the progress of the contract are:

1) Charter Communications, LLC
2) Duke Energy
3) Centurylink
4) AT&T, Inc.
5) Lake Apopka Gas

4. The Contractor shall not enter or occupy private land outside of the project site or right-of-way, except by written permission of the appropriate owners. Contractor shall provide Owner a copy of such written permission.

1.02 LABOR

A. The Contractor shall keep the Contract under his own control and it shall be his responsibility to see that the Work is properly supervised and carried on faithfully and efficiently. The Contractor shall supervise the Work personally or shall have a competent, English speaking superintendent or representative, who shall be on the site of the project at all working hours, and who shall be clothed with full authority by the Contractor to direct the performance of the Work and make arrangements for all necessary materials, equipment, and labor without delay.

1.03 MATERIALS AND EQUIPMENT

A. MANUFACTURER

1. All transactions with the manufacturers or subcontractors shall be through the Contractor, unless the Contractor shall request and at the City/Engineer's option, that the manufacturer or subcontractor communicate directly with the Engineer. Any such transactions shall not in any way release the Contractor from his full responsibility under this Contract.

2. All workmanship and materials shall be of the highest quality. The equipment shall be the product of manufacturers who are experienced and skilled in the field with an established record of research and development. No equipment will be considered unless the manufacturer has designed and manufactured equipment of comparable type and size for at least five years.

3. All materials and equipment furnished by the Contractor shall be subject to the inspection and approval of the City/Engineer. No material shall be delivered to the work without prior approval of the City/Engineer.

4. All apparatus, mechanisms, equipment, machinery, and manufactured articles for incorporation into the Project shall be the new (most current production at time of bid) and unused standard products of recognized reputable manufacturers.

5. Safety Requirements:

   a. All machinery and equipment shall be safeguarded in accordance with the safety codes of the ANSI, OSHA, and local industrial codes.

   b. In addition to the components specified and shown on the Drawings and necessary for the specified performance, the Contractor shall incorporate in the design and show on the shop drawings all the safety features required by the current codes and regulations, including but not limited to those of the Occupational Safety and Health Act, and Amendments thereto.

B. SUBSTITUTIONS

1. The substitution requirements of this Section are in addition to the requirements of the General Conditions and Supplementary Conditions.

2. When a particular product is specified or called for, it is intended and shall be understood that the proposal tendered by the Bidder includes those products in his Bid. Should the Bidder desire to provide alternate products equal to those specified, the Bidder shall furnish information as described in the General Conditions or Bid Form. The alternate product or products submitted by the Bidder shall meet the requirements of the specifications and shall, in all respects, be equal to the products specified by name herein.

3. The intent of these specifications is to provide the Owner with a quality facility without discouraging competitive bidding. For products specified only by reference standards, performance and descriptive methods, without naming manufacturer's products, the Contractor may provide the products of any manufacturer complying with the Contract Documents, subject to the review of product data by the Engineer as specified herein. For products specified by naming a manufacturer's product followed by the words "or equal", the Contractor may provide any of the named products. He may substitute a product by another manufacturer as an equal only after review by the Engineer as specified herein. In all cases, any product provided must comply with all of the specified requirements.

C. DELIVERY AND STORAGE

1. General

a. The Contractor shall be responsible for all material, equipment and supplies sold and delivered to the Owner under this Contract until final inspection of the Work and acceptance thereof by the Owner.

b. All materials and equipment to be incorporated in the Work shall be handled and stored by the Contractor before, during and after shipment in a manner to prevent warping, twisting, bending, breaking, chipping, rusting, and any injury, theft or damage or any kind whatsoever to the material or equipment.

c. All materials which, in the opinion of the City/Engineer, have become so damaged as to be unfit for the use intended or specified shall be promptly removed from the site of the Work, and the Contractor shall receive no compensation for the damaged material or its removal.

d. In the event any such material, equipment and supplies are lost, stolen, damaged or destroyed prior to final inspection and acceptance, the Contractor shall replace same without additional cost to the Owner.

2. Delivery - the Contractor Shall:

a. Deliver materials in ample quantities to insure the most speedy and uninterrupted progress of the Work so as to complete the Work within the allotted time.

b. Coordinate deliveries in order to avoid delay in, or impediment of, the progress of the Work of any related Contractor.

c. Arrange deliveries of products in accordance with construction schedules coordinated to avoid conflict with work and conditions at the site.

d. Deliver products in undamaged condition, in manufacturer's original containers or packaging, with identifying labels intact and legible.

e. Immediately on delivery, inspect shipments with the Owner's field representative to assure compliance with requirements of Contract Documents and approved submittals, and that products are properly protected and undamaged.

f. Provide equipment and personnel to handle products by methods recommended by the manufacturer to prevent soiling or damage to products or packaging.

3. Storage

a. The Contractor shall be responsible for securing a location for on-site storage of all material and equipment necessary for completion of this project. The location and storage layout shall be submitted to the Owner/Engineer at the Pre-construction Conference.

b. All material delivered to the job site shall be protected from dirt, dust, dampness, water, and any other condition detrimental to the life of the material from the date of delivery to the time of installation of the material and acceptance by the Owner.

c. Store products in accord with manufacturer's instructions, with seals and labels intact and legible.

d. When required or recommended by the manufacturer, the Contractor shall furnish a covered, weather protected storage structure providing a clean, dry, noncorrosive environment for all mechanical equipment, valves, architectural items, electrical and instrumentation equipment, and special equipment to be incorporated into this project.

e. Arrange storage in a manner to provide easy access for inspection. Make periodic inspections of stored products to assure that products are maintained under specified conditions and free from damage or deterioration.

f. Manufacturer's storage instructions shall be carefully studied by the Contractor and reviewed with the Engineer by him. These instructions shall be carefully followed and a written record of this kept by the Contractor.

g. Moving parts shall be rotated a minimum of once weekly to insure proper lubrication and to avoid metal-to-metal "welding". Electric motors provided with heaters shall be temporarily wired for continuous heating during storage. Upon installation of the equipment, the Contractor shall start the equipment, at least half load, once weekly for an adequate period of time to insure that the equipment does not deteriorate from lack of use.

h. Mechanical equipment to be used in the Work, if stored for longer than ninety (90) days, shall have the bearings cleaned, flushed and lubricated prior to testing and start-up, at no extra cost to the Owner.

i. Prior to acceptance of the equipment, the Contractor shall have the manufacturer inspect the equipment during start-up and certify that its condition has not been detrimentally affected by the long storage period. Such start-up certification by the manufacturer shall be deemed to mean that

the equipment is judged by the manufacturer to be in a condition equal to that of equipment that has been shipped, installed and tested. If such a certification is not given, the equipment shall be judged to be defective. It shall be removed and replaced at the Contractor's expense.

j. Specific Material Storage Requirements

1) Loose Granular Materials: Store in a well-drained area on solid surfaces to prevent mixing with foreign matter.

2) Cement, sand and lime: Stored under a roof and off the ground and kept completely dry at all times.

3) Brick, block and similar masonry products: Handle and store in a manner to reduce breakage, chipping, cracking and spilling to a minimum.

4) All structural and miscellaneous steel, and reinforcing steel: Store off the ground or otherwise to prevent accumulations of dirt or grease, and in a position to prevent accumulations of standing water and to minimize rusting. Beams shall be stored with the webs vertical.

4. Should the Contractor fail to take proper action on storage and handling of equipment supplied under this Contract within seven days after written notice to do so has been given, the Owner retains the right to correct all deficiencies noted in previously transmitted written notice and deduct the cost associated with these corrections from the Contractor's Contract. These costs may be comprised of expenditures for labor, equipment usage, administrative, clerical, engineering and any other costs associated with making the necessary corrections. In any event, equipment and materials not properly stored will not be included in a payment estimate.

D. MANUFACTURER'S INSTRUCTIONS FOR INSTALLATION

1. Comply with manufacturer's printed instructions, obtain and distribute copies of such instructions to all parties involved in the installation, including two copies for the Engineer's use. Maintain one set of complete instructions at the job site during installation and until completion.

2. Handle, install, connect, clean, condition and adjust products in strict accord with such instructions and in conformity with specified requirements. Should job conditions or specified requirements conflict with the manufacturer's instructions, consult with Engineer for further instructions. Do not proceed with Work without clear instructions.

3. Perform Work in strict accordance with manufacturer's instructions. Do not omit any preparatory step or installation procedure unless specifically modified or exempted by Contract Documents.

4. The Contractor shall have on hand sufficient proper equipment and machinery of ample capacity to facilitate the installation of the Work and to handle all emergencies normally encountered in Work of this character.

5. Equipment shall be installed in a neat and workmanlike manner on the foundations at the locations and elevations shown on the Plans, unless directed otherwise by the Engineer during installation.

6. All equipment shall be correctly aligned, leveled and adjusted for satisfactory operation and shall be installed so that proper and necessary connections can be made readily between the various units.

7. The Contractor shall furnish, install and protect all necessary anchor and attachment bolts and all other appurtenances needed for the installation of the devices included in the equipment specified. Anchor bolts shall be as approved by the Engineer and made of ample size and strength for the purposes intended. Substantial templates and working drawings for installation shall be furnished by the manufacturer.

E. INSPECTION AND TESTING

1. General

a. If, in the testing of any material or equipment, it is ascertained by the Engineer that the material or equipment does not comply with the Contract, the Contractor shall be notified thereof, and he will be directed to refrain from delivering said material of equipment, or to remove it promptly from the site or from the Work and replace it with acceptable material, without cost to the Owner.

b. Tests of electrical and mechanical equipment and appliances shall be conducted in accordance with recognized test codes of the ANSI, ASME, or the IEEE, except as may otherwise be stated herein.

2. Cost

a. Owner shall employ and pay for the services of an independent testing laboratory to perform testing specifically indicated on the Contract Documents or specified in the Specifications and may at any other time elect to have materials and equipment tested for conformity with the Contract Documents.

b. The cost of field leakage, pressure and bacteriological tests and shop tests of materials and equipment specifically called for in the Contract Documents shall be borne by the Contractor, and such costs shall be deemed to be included in the Contract price.

c. Notify Owner employed-laboratory sufficiently (a minimum of 48 hours) in advance of operations to allow for laboratory assignment of personnel and scheduling of tests. When tests or inspections cannot be performed after such notice, reimburse Owner for laboratory personnel and travel expenses incurred.

d. Contractor shall employ and pay for the services of the same or a separate, equally qualified independent testing laboratory to perform additional inspections, sampling and testing required for the Contractor's convenience and as approved by the Owner.

e. If the test results indicate the material or equipment complies with the Contract Documents, the Owner shall pay for the cost of the testing laboratory. If the tests and any subsequent retests indicate the materials and equipment fail to meet the requirements of the Contract Documents, the Contractor shall pay laboratory costs of such failed tests. The total of such costs shall be deducted from any payments due to the Contractor.

f. The Contractor shall pay for all Work required to uncover, remove, replace, retest, etc. any Work not tested due to the Contractor's failure to provide the minimum 48 hours advance notice or due to failed tests.

3. Shop Testing

a. Each piece of equipment for which pressure, duty, capacity, rating, efficiency, performance, function or special requirements are specified shall be tested in the shop of the manufacturer in a manner which shall conclusively prove that its characteristics comply fully with the requirements of the Contract Documents. No such equipment shall be shipped to the Work until the Engineer notifies the Contractor, in writing, that the results of such tests are acceptable.

b. Five copies of the manufacturer's actual shop test data and interpreted results thereof, accompanied by a certificate of authenticity notarized and signed by a responsible official of the manufacturing company, shall be furnished to the Engineer as a prerequisite for the acceptance of any equipment. The cost of shop tests (excluding cost of Owner's representative) and of furnishing manufacturer's preliminary and shop test data of operating equipment shall be borne by the Contractor and shall be included in the Contract price.

c. The Contractor shall give notice in writing to the Owner sufficiently in advance of his intention to commence the manufacture or preparation of materials especially manufactured or prepared for use in or as part of the permanent construction. Such notice shall contain a request for inspection, the date of commencement and the expected date of completion of the manufacture or preparation of materials. Upon receipt of such notice, the Owner shall arrange to have a representative present at such times during the manufacture as may be necessary to inspect the materials; or he will notify the Contractor that the inspection will be made at a point other than the point of manufacture; or he will notify the Contractor that inspection will be waived.

d. When inspection is waived or when the Engineer so requires, the Contractor shall furnish to him authoritative evidence in the form of Certificates of Manufacture that the materials to be used in the Work have been manufactured and tested in conformity with the Contract Documents. These certificates shall be notarized and shall include five (5) copies of the results of physical tests and chemical analysis, where necessary, that have been made directly on the product or on similar products of the manufacturer.

e. The Contractor must comply with these provisions before shipping any material. Such inspections by the Owner shall not release the Contractor from the responsibility for furnishing materials meeting the requirements of the Contract Documents.

4. Field Testing

a. The Owner shall employ and pay for services of an independent testing laboratory to perform testing specifically indicated in the Contract Documents. Employment of the laboratory shall in no way relieve Contractor's obligations to perform the Work of the Contract.

b. The Owner may at any time during the progress of the Work request additional testing beyond that specified in the Contract. This testing will be at the Owner's expense. The Contractor shall assist the testing laboratory personnel in all ways so as to facilitate access to the location of the material or equipment to be tested.

c. Contractor shall:

1) Cooperate with laboratory personnel, provide access to the Project.

2) Secure and deliver to the laboratory adequate quantities of representative samples of materials proposed to be used and which require testing.

3) Provide to the laboratory the preliminary design mix proposed to be used for concrete, and other material mixes which require control by the testing laboratory.

d. The following schedule summarizes the responsibilities of various tests that may be required by the Contract Documents. Contractor shall notify Owner in advance of work so that arrangements can be made with the testing laboratory.

TEST	NOTES	PAID BY
Materials Compaction	Embankment, pipe backfill, subgrade, base, asphaltic concrete as required by Owner	Owner
Asphaltic Concrete Paving	As required by Owner	Owner
LBR	As required by Owner	Owner
Concrete	Initial acceptance testing at delivery, cylinders As required by Owner	Owner
All Other Testing	As specified in various sections of the Project Manual	As Indicated

5. Inspection by Other Agencies: The Florida Department of Transportation, the St. Johns River Water Management District, and other authorized governmental agencies shall have free access to the site for inspecting materials and Work, and the Contractor shall afford them all necessary facilities and assistance for doing so. Any instructions to the Contractor resulting from these inspections shall be given through the Owner/Engineer. These rights of inspections shall not be construed to create any contractual relationship between the Contractor and these agencies.

F. WARRANTIES AND BONDS

1. The Contractor shall submit warranties and bonds as specified in the General Conditions and as specified herein. Co-execute submittals when so specified.

2. If an individual specification section requires a particular warranty more stringent than that required by this Section or the General Conditions, the more stringent requirements shall govern for the applicable portion of the Work.

3. The warranties and bonds shall include:

   a. Equipment or product description
   b. Manufacturer's name, principal, address and telephone number
   c. Contractor, name of responsible principal, address and telephone number.
   d. Local supplier's or representatives name and address
   e. Scope of warranty or bond
   f. Proper procedure in case of failure
   g. Instances that might affect the validity of warranty or bond
   h. Date of beginning of warranty, bond or service and maintenance contract
   i. Duration of warranty, bond or service maintenance contract

G. TOOLS AND ACCESSORIES

1. The Contractor shall furnish with each type, kind or size of equipment, one complete set of suitably marked high grade special tools and accessories which may be needed to adjust, operate, maintain or repair the equipment (including special grease guns or other lubricating tools).

2. Such tools and accessories shall be furnished in approved painted steel tool cases, properly labeled and equipped with good grade cylinder locks and duplicate keys no later than upon start-up.

3. Each piece of equipment shall be provided with a substantial stainless steel nameplate, securely fastened in place and clearly inscribed with the manufacturer's name, year of manufacture, serial number, weight and principal rating data.

H. SPARE PARTS

Spare parts may be specified for certain equipment in the pertinent sections of the Specifications. The Contractor shall collect and store all spare parts during construction and shall surrender such to the Owner in original boxes or containers upon final inspection. In addition, the Contractor shall furnish to the Owner an inventory listing all spare parts, the equipment they are associated with, the name and address of the supplier, and the delivered cost of each item. Copies of actual invoices for each item shall be furnished with the inventory to substantiate the delivered cost.

I. BORROW, EXCESS SUITABLE AND UNSUITABLE MATERIALS

The Contractor shall conduct access, hauling, filling and storage operations on-site as specified herein and as shown on the Contract Drawings.

1. Borrow Material: All borrow material shall be obtained off-site by the Contractor.

2. Excess Suitable Material: Ownership of excess suitable material excavated from the project shall be as follows:

   a. The City shall retain ownership of all suitable excavated materials until the final job requirements for fill or backfill materials have been fulfilled. The Contractor shall take ownership of remaining excavated materials not needed for job requirements, and dispose of them outside the right-of-way to the satisfaction of the Engineer.

3. Unsuitable Material

   a. All unsuitable material shall become the property and responsibility of the Contractor. The Contractor shall properly dispose of all such unsuitable materials off-site in accordance with local, State and Federal Regulations, or;

   b. When approved by the City, unsuitable material may be disposed of in accordance with Section 120-5.3 of the FDOT Standard Specification for Road and Bridge Construction, 2010 Edition, including any supplements or revisions thereto.

J. USE OF CHEMICALS

All chemicals used during the project construction furnished for project operation, whether herbicide, pesticide, disinfectant, polymer, reactant or other classification, must show approval of either the Environmental Protection Agency or the U.S. Department of Agriculture. Use of all such chemicals and disposal of residues shall be in strict conformance with instructions.

1.04 PROJECT SITE AND ACCESS

A. USE OF PUBLIC STREETS

The use of public streets and alleys shall be such as to provide a minimum of inconvenience to the public and to other traffic. Any earth or other excavated material spilled from trucks shall be removed immediately by the Contractor and the streets cleaned to the satisfaction of the Owner.

B. USE OF PUBLIC STREETS FOR HAUL ROADS

Prior to construction, the Contractor shall designate all proposed haul roads to be used during the life of the project. Any earth or other materials spilled from trucks shall be removed by the Contractor and streets cleaned to the satisfaction of the Owner. Contractor shall be responsible for repairs to any damages caused by his operations, prior to final payment.

All trucks carrying earth shall be covered while moving with an appropriate tarpaulin. All cleanup shall be the responsibility of the Contractor.

All trucks/moving equipment shall have backup warning horns in proper working order while on the job site.

Any hauling unit or equipment loaded in excess of the maximum weights set out in the Florida Uniform Traffic Law, or lower weights which may be legally established for any road, bridge or street, shall not be operated on except as provided by special permit issued by the governmental unit having jurisdiction over a particular road or bridge.

Roads or bridges that are to be demolished may be overloaded after they are permanently closed to the public. All liability for loss or damage resulting from equipment operating on a structure permanently closed to the public shall be the responsibility of the Contractor.

C. ACCESS

1. Neither the material excavated nor the materials or equipment used in the construction of the Work shall be so placed as to prevent free access to all fire hydrants, valves or manholes.

2. Access to businesses and residents located adjacent to the project site must be maintained at all times. Contractor may pre-arrange the closing of business or residential access with the business owner or property owner. As a minimum Contractor shall detail such pre-arranged access closing as notation to be included in Contractor Daily Report of Construction Activities addressed by Article 1.07.L of these General Requirements, Section 01001. Such pre-arranged access closing shall not exceed two (2) hours. Property drainage and grading shall be restored and all construction debris removed within forty-eight (48) hours after completion of crossing work at access location.

3. Contractor agrees that representatives of the Owner and any governmental agents will have access to the Work wherever it is in preparation or progress and that the Contractor shall provide facilities for such access and inspection.

4. Contractor agrees that access for refuse disposal services, emergency vehicles, and private delivery services will be maintained for businesses and residents located adjacent to the project site at all times

1.05 PERMITS

A. The Owner has obtained permits related to this Work prior to advertising and are specifically listed in Table 01001-A. The Owner will also obtain permits that relate to the completed facilities.

B. Upon Notice of Award, the Contractor shall immediately apply for all other applicable permits to construct the Work from the appropriate governmental agency or agencies. No Work shall commence until all applicable permits have been obtained and copies delivered to the Owner/Engineer. The costs for obtaining these permits shall be borne by the Contractor.

C. The Contractor shall strictly adhere to the specific requirements of the governmental unit(s) or agency(ies) having jurisdiction over the Work. Whenever there is a difference in the requirements of a jurisdictional body and these Specifications, the more stringent shall apply.

D. The Contractor shall serve as Owner's Construction Coordinator with respect to notification of permitting governmental departments related to all Owner obtained permits. The Contractor shall be responsible for notification of all governmental departments addressed by Owner obtained permits prior to starting Work, during the progress of the Work, and immediately upon completion of the Work (Work is defined in reference to construction activities to be performed related to individual permit requirements). Such notice(s) shall be submitted or provided to permitting governmental department(s) in format and within time period(s) required. If pre and/or post notification time period is not stated by individual permit(s) then Contractor shall provide required notification(s) not less than forty-eight (48) hours in advance and after completion of Work. Permit(s) that require the Contractor shall address verbal notification(s) by follow-up written notice confirmation. Contractor shall contemporaneously submit to Owner and Owner's Engineer copies of all written notification issued to permitting governmental department(s).

1.06 UTILITIES

A. UTILITY CONSTRUCTION

1. Public utility installations and structures shall be understood to include all poles, tracks, pipes, wires, conduits, house service connections, vaults, manholes and all other appurtenances and facilities pertaining thereto, whether owned or controlled by governmental bodies or privately owned by individuals, firms or corporations, used to serve the public with transportation, traffic control, gas, electricity,

telephone, sewerage, drainage or water. Other public or private property that may be affected by the Work shall be deemed included hereunder.

2. All open excavations shall be adequately safeguarded by providing temporary barricades, caution signs, lights and other means to prevent accidents to persons, and damage to property. The Contractor shall, at his own expense, provide suitable and safe bridges and other crossings for accommodating travel by pedestrians and workmen. Bridges provided for access to private property during construction shall be removed when no longer required.

3. The length of open trench will be controlled by the particular surrounding conditions, but shall always be confined to the limits prescribed by the Owner. If the excavation becomes a hazard, or if it excessively restricts traffic at any point, the Owner may require special construction procedures. As a minimum, the Contractor shall conform to the following restoration procedures:

   a. Interim Restoration: All excavations shall be backfilled and compacted as specified by the end of each working day. For excavations within existing paved areas, roadway base shall be installed as to provide a relatively smooth surface free of loose material before opening to traffic. At the end of each workweek the interim asphaltic surface course shall be completed. Contractor shall coordinate his construction activity including density tests and inspections to allow sufficient time to achieve this requirement. All driveway cuts shall be backfilled, compacted, and lime rock base spread and compacted immediately after utility installation. Contractor shall coordinate with the individual property owners prior to removing the driveway section. Any utility crossing an existing roadway, parking lot or other paved area shall be patched by the end of the working day.

      All pipe and fittings shall be neatly stored in a location approved by the Engineer that will cause the least disturbance to the public. All debris shall be removed and properly disposed of by the end of each working day.

      Maintenance of all restored facilities shall be the Contractor's responsibility. This maintenance shall be performed on an on-going basis during the course of construction.

      The Contractor's Progress Schedule shall reflect the above restoration requirements.

   b. Additional Restoration for Work in Business or Commercial Districts: The Contractor shall restore all private property, damaged by construction, to its original condition. Access to businesses located adjacent to the project site must be maintained at all times. Contractor may prearrange the closing of business accesses with the business owner. Such prearranged access closing

shall not exceed two (2) hours. Property drainage and grading shall be restored within 24 hours of backfilling trench.

B. EXISTING UTILITIES

1. The locations of all existing underground piping, structures and utilities have been taken from information received from the respective owner. The locations are shown without express or implied representation, assurance, or guarantee that they are complete or correct or that they represent a true picture of underground piping to be encountered.

2. The Contractor shall, at all times in performance of the Work, employ approved methods and exercise reasonable care and skill so as to avoid unnecessary delay, injury, damage or destruction of existing public utility installations and structures; and shall, at all times in the performance of the Work, avoid unnecessary interference with, or interruption of, public utility services; and shall cooperate fully with the owners thereof to that end.

3. Pipelines shall be located substantially as indicated on the Drawings, but the Owner/Engineer reserves the right to make such modifications in locations as may be found desirable to avoid interference with existing structures or for other reasons. When the location of piping is dimensioned on the Drawings, it shall be installed in that location; when the location of piping is shown on a scaled drawing, without dimensions, the piping shall be installed in the scaled location unless the Owner/Engineer approves an alternate location for the piping. Where fittings are noted on the Drawings, such notation is for the Contractor's convenience and does not relieve him from laying and jointing different or additional items where required. The Engineer may require detailed pipe laying drawings and schedules for project control.

4. The Contractor shall exercise care in any excavation to locate all existing piping and utilities. All utilities that do not interfere with the completed Work shall be carefully protected against damage. Any existing utilities damaged in any way by the Contractor shall be restored or replaced by the Contractor at his expense as directed by the Owner/Engineer. Only the owner of the respective utility shall perform work on any existing facilities that require repairs.

5. It is the responsibility of the Contractor to ensure that all utility or other poles, the stability of which may be endangered by the proximity of excavation, be temporarily stayed and/or shored in position while Work proceeds in the vicinity of the pole and that the utility or other companies concerned be given reasonable advance notice of any such excavation by the Contractor.

C. NOTICES

1. All governmental utility departments and other owners of public utilities which may be affected by the Work will be informed in writing by the Contractor within two weeks after the execution of the Contract or Contracts covering the Work. Such notice will be sent out in general, and directed to the attention of the governmental utility departments and other owners of public utilities for such installations and structures as may be affected by the Work.

2. The Contractor shall also comply with Florida Statute 553.851 regarding notification of existing gas and oil pipeline company owners. Evidence of such notice shall be furnished to the Owner within two weeks after the execution of the Contract.

3. It shall be the Contractor's responsibility to contact utility companies at least 48 hours in advance of breaking ground in any area or on any unit of the Work so maintenance personnel can locate and protect facilities, if required by the utility company.

4. The Contractor shall, prior to interrupting a utility service (water, sewer, etc.) for the purpose of making cut-ins to the existing lines or for any other purposes, contact the utility owner and make arrangements for the interruption that will be satisfactory to the utility owner. Arrangements shall be considered to include the notice of utility service interruption to all business and residential users located within the affected area. Notice details shall be considered to include utility service to be interrupted (water, sewer, etc.) and time/date/proposed duration of utility service interruption. Notice for potable water system interruption shall be considered to include boil water information

D. EXPLORATORY EXCAVATIONS

1. Exploratory excavations shall be performed in advance of all roadway and utility construction to be performed by the Contractor under this Contract as follows:

   a. Contractor shall perform all exploratory excavations and make all necessary contacts and communications as is required pursuant to the Florida Sunshine Law.

   b. Exploratory excavations shall be conducted by the Contractor for the purpose of locating underground pipelines, conduits, cables or structures in advance of the construction. Test pits shall be excavated in areas of potential conflicts between existing and proposed facilities and at piping connections to existing facilities a minimum of 48 hours or 1000 feet in advance of Work. If there is a potential conflict, the Contractor is to notify the Engineer immediately in writing. Information on the obstruction to be furnished by the Contractor shall include: Location, Elevation, Utility Type, Material and Size. Test pits

shall be backfilled immediately after their purpose has been satisfied and the surface restored and maintained in a manner satisfactory to the Engineer.

2. The Engineer shall have forty-eight (48) hours to determine the resolution of any unknown or unforeseen conflict discovered during exploratory excavations along the route of the work after receipt of written notice of conflict from the Contractor. No Contractor claims for additional compensation or extension of Contract Time shall be allowed for this period of time.

E. UTILITY CROSSINGS

It is intended that wherever existing utilities must be crossed, deflection of the pipe within specified limits and cover shall be used to satisfactorily clear the obstruction unless otherwise indicated on the Drawings. However, when in the opinion of the Owner/Engineer this procedure is not feasible, he may direct the use of fittings for a utility crossing or conflict transition as detailed on the Drawings.

F. RELOCATIONS

1. Relocations shown on the Drawings - Public utility installations or structures, including but not limited to light poles, signs, fences, piping, conduits and drains that interfere with the positioning of the Work which are shown on the Drawings to be removed, relocated, replaced or rebuilt by the Contractor shall be considered as part of the general cost of doing the Work and shall be included in the prices bid for the various contract items. No separate payment shall be made therefore.

2. Relocations not shown on the Drawings

   a. Where public utility installations or structures are encountered during the course of the Work, and <u>are not</u> indicated on the Drawings or in the Specifications, and when, in the opinion of the Owner/Engineer, removal, relocation, replacement or rebuilding is necessary to complete the Work under this contract, such Work shall be accomplished by the utility having jurisdiction, or such Work may be ordered, in writing by the Owner/Engineer, for the Contractor to accomplish.

   b. If such Work is accomplished by the utility having jurisdiction, it will be carried out expeditiously, and the Contractor shall give full cooperation to permit the utility to complete the removal, relocation, replacement or rebuilding as required. If the Contractor accomplishes such Work, it will be paid for as a Change Order.

3. All existing utility castings, including valve boxes, junction boxes, manholes, hand holes, pull boxes, inlets and similar structures in the areas of construction that are to remain in service and in areas of trench restoration and pavement

replacement, shall be adjusted by the Contractor to bring them flush with the surface of the finished Work.

4. All existing utility systems which conflict with the construction of the Work herein that can be temporarily removed and replaced shall be accomplished at the expense of the Contractor. Work shall be done by the utility owner unless the utility owner approves in writing that the Work may be done by the Contractor.

1.07 RELATED CONSTRUCTION REQUIREMENTS

A. TRAFFIC MAINTENANCE

1. Maintain public highway traffic within the limits of the project for the duration of the construction period, including any temporary suspensions of Work. Work shall also include construction and maintenance of any necessary detour facilities; furnishing, installing and maintaining of traffic control and safety devices during construction, control of dust, or any other special requirements for safe and expeditious movement of vehicular and pedestrian traffic. Maintenance of Traffic shall be consistent with Section 102 of Florida Department of Transportation's *FY 2023-24 Standard Plans for Road and Bridge Construction*, and supplements and revisions thereto.

2. The Contractor shall prepare a Traffic Control Plan prior to commencing any Work on the site. The Traffic Control Plan shall detail procedures and protective measures for protection and control of traffic affected by the Work consistent with Section 102 of Florida Department of Transportation's *FY 2023-24 Standard Plans for Road and Bridge Construction*, and supplements and revisions thereto.

3. Before closing any thoroughfare, the Contractor shall give written notice to and, if necessary, obtain a permit or permits from the duly constituted public authority having jurisdiction over the thoroughfare. Notice shall be given no less than 72 hours in advance of the time when it may be necessary in the process of construction to close such thoroughfare, or as may be otherwise provided in the approved Traffic Control Plan.

4. The Contractor shall sequence and plan construction operations and shall generally conduct his Work in such a manner as not to unduly or unnecessarily restrict or impede existing normal traffic through the streets of the local community.

5. Insofar as it is practicable, excavated material and spoil banks shall not be located in such a manner as to obstruct traffic. The traveled way of all streets, roads and alleys shall be kept clear and unobstructed insofar as is possible and shall not be used for the storage of construction materials, equipment, supplies, or excavated earth, except when and where necessary.

6. If required by duly constituted public authority, the Contractor shall, at his own expense, construct bridges or other temporary crossing structures over trenches so as not to unduly restrict traffic. Such structures shall be of adequate strength and proper construction and shall be maintained by the Contractor in such a manner as not to constitute an undue traffic hazard. Private driveways shall not be closed except when and where necessary, and then only upon due advance notice to the Owner/Engineer and for the shortest practicable period of time consistent with efficient and expeditious construction. The Contractor shall be liable for any damages to persons or property resulting from his work.

7. The Contractor shall make provisions at all "open cut" street crossings to allow a minimum of one lane to be open for vehicular traffic at all times. Lane closing shall be as permitted by the local governing authority and shall be repaired to a smooth, safe driving surface immediately following the installation of pipe or conduit. Flag men shall be required, in addition to barricades, signs and other protective devices at all lane closings.

8. The Contractor shall make provisions at cross streets for the free passage of vehicles and pedestrians, either by bridging or otherwise, and shall not obstruct the sidewalks, gutters, or streets, nor prevent in any manner the flow of water in the latter, but shall use all proper and necessary means to permit the free passage of surface water along the gutters.

9. The Contractor shall immediately cart away all offensive matter, exercising such precaution as may be directed by the Owner/Engineer. All material excavated shall be so disposed of as to inconvenience the public and adjacent tenants as little as possible and to prevent injury to trees, sidewalks, fences and adjacent property of all kinds.

B. BARRIER AND LIGHTS

The Contractor shall exercise extreme care in the conduct of the Work to protect health and safety of the workmen and the public. The Contractor shall provide all protective measures and devices necessary, in conformance with applicable local, state and federal regulations regarding their need and use. Protective measures shall include but are not limited to barricades, warning lights/flashers and safety ropes.

C. DEWATERING, FLOTATION

The Contractor, with his own equipment, shall do all pumping necessary to dewater any part of the Work area during construction operations to insure dry working conditions. The Contractor shall be completely responsible for any tanks, wet wells or similar structures that may become buoyant during the construction and modification

operations due to the ground water or floods and before the structure is put into operation. The proposed final structures have been designed against buoyancy; however, the Contractor may employ methods, means and techniques during the various stages of construction (or other conditions) which may affect the buoyancy of structures. Should there be any possibility of buoyancy of a structure, the Contractor shall take the necessary steps to prevent its buoyancy either by increasing the structure's weight, by filling it with approved material or other acceptable methods. Damage to any structures due to floating or flooding shall be repaired or the structures replaced at the Contractor's expense.

D. DUST, NOISE AND EROSION CONTROL

1. The Contractor shall prevent dust nuisance from his operations or from traffic by the use of water and deliquescent salts.

2. Noise suppression:

   a. The Contractor shall eliminate noise to as great an extent as practical at all times. Air compressing plants shall be equipped with silencers and the exhaust of all gasoline motors or other power equipment shall be provided with mufflers. In the vicinity of hospitals and schools, special care shall be used to avoid noise or other nuisances. The Contractor shall strictly observe all local regulations and ordinances covering noise control.

   b. Sound levels measured by the Owner/Engineer's personnel shall not exceed 45 dBA after 8 p.m. or 55 dBA 8 a.m. to 8 p.m. This sound level shall be measured at the exterior of the nearest exterior wall of the nearest residence or building. Levels at the equipment shall not exceed 85 dBA at any time. Sound levels in excess of these values are sufficient cause to have the Work halted until equipment can be quieted to these levels. Work stoppage by the Owner/Engineer for excessive noise shall <u>not</u> relieve the Contractor of other contractual responsibilities stipulated in the Contract Documents including, but not limited to Contract Price and time.

3. Erosion and Water Pollution Control

   The Contractor shall prepare and provide the Engineer with a plan for the prevention, control and abatement of erosion and water pollution. The Contractor shall provide erosion and water pollution control in accordance with the Contract Plans and Specifications, *Standard Specifications for Road and Bridge Construction* 2010 Edition, Section 104, and all permit requirements. The Contractor is responsible for meeting appropriate federal, state, and local regulations and water quality standards, such as turbidity.

E. CONSTRUCTION ENGINEERING AND LAYOUT

1. Professional Engineer

The Contractor shall provide the services of a Registered Professional Engineer currently licensed in the State of Florida for the following specific services as applicable to the Work:

a. Inspections, testing, witnessing requiring a licensed professional engineer;
b. Design of temporary shoring, bridging, scaffolding or other temporary construction;
c. Other requirements as specified herein.

2. Laying Out the Work

a. Prior to commencement of construction the Engineer will have established vertical and horizontal controls throughout the site which the Contractor shall use in laying out the work. The Contractor shall maintain centerline of construction and right-of-way lines at all times, even during the utility relocation periods. The Contractor shall erect and maintain white/black standard FDOT station markers every 100 feet throughout contract duration. The Contractor shall be responsible for protecting the controls in the field and establishing all lines and grades, together with all reference points as required by the various trades for all work under this Contract. All required layout shall be done using competent and experienced personnel under the supervision of a Land Surveyor registered in the State of Florida.

b. The Contractor shall provide all labor and instruments and stakes, templates, and other materials necessary for marking and maintaining all lines and grades. The lines and grades shall be subject to any checking the Owner or Engineer may decide necessary.

c. The Contractor shall employ only competent personnel and utilize only suitable equipment in performing layout work. He shall not engage the services of any person or persons in the employ of the Owner for performance of layout work.

d. Adequate field notes and records shall be kept as layout work is accomplished. These field notes and records shall be available for review by the Engineer as the work progresses and copies shall be furnished to the Engineer at the time of completion of the project.

e. Any inspection or checking of the Contractor's field notes or layout work by the Engineer and the acceptance of all or any part thereof, shall not relieve the Contractor of his responsibility to achieve the lines, grades and dimensions shown in the plans and specifications.

f. Prior to final acceptance of the project, the Contractor shall mark in a permanent manner on the surface of the completed work all horizontal control points originally furnished by the Owner.

g. No separate cost item is provided for laying out of the work, the cost of which shall be included in the unit prices for items in the Proposal.

3. Record Drawings

During the entire construction operation, the Contractor shall maintain records of all deviations from the Drawings and Specifications and shall prepare therefrom "Record Drawings″ showing correctly and accurately all changes and deviations from the work, made during construction to reflect the work as it was actually constructed. The Record Drawing shall follow the all of the requirements in the City of Ocoee Engineering Standards Manual Section 3.01.05

1) Submittals

i. Certificate signed by a Registered Surveyor certifying that elevations and locations of improvements are in conformance, or non-conformance, with Contract Documents.

ii. Certified drawings showing locations of all structures, piping conduits and other improvements. These drawings are referenced as the Record Drawings and shall be included with the Project Record Documents.

iii. Documentation to verify accuracy of field engineering work when requested by the Engineer.

iv. The Contractor shall provide Record Drawings in the following formats:

1 – Signed and Sealed PDF drawing
1 – Copy of the Record Drawings in drawn in autoCAD (drawings must be in State Plane Coordinates)

F. LINES AND GRADES

1. All Work under this Contract shall be constructed in accordance with the lines and grades shown on the Drawings, or as given by the Engineer. The full responsibility for keeping alignment and grade shall rest upon the Contractor.

2. The Contractor shall, at his own expense, establish all working or construction lines and grades as required from the project control points set by the Owner/Engineer, and shall be solely responsible for the accuracy thereof.

3. Water main and force main shall have a minimum of 36 inches of cover over the top of the pipe. Cover shall vary to provide long uniform gradient or slope to pipe to minimize air pockets and air release valves.

G. TEMPORARY CONSTRUCTION

1. Temporary fences: If, during the course of the Work, it is necessary to remove or disturb any fencing, the Contractor shall, at his own expense, provide a suitable temporary fence which shall be maintained until the permanent fence is replaced. The Engineer will be solely responsible for the determination of the necessity for providing a temporary fence and the type of temporary fence to be used.

2. Responsibility for Temporary Structures: In accepting the Contract, the Contractor assumes full responsibility for the sufficiency and safety of all temporary structures or work and for any damage which may result from their failure or their improper construction, maintenance or operation and will indemnify and save harmless the Owner from all claims, suits or actions and damages or costs of every description arising by reason of failure to comply with the above provisions.

H. TEMPORARY FACILITIES

1. Contractor shall furnish, install and maintain temporary facilities required for construction, and shall remove them upon completion of the Work. All facilities shall comply with the respective federal, state and local codes and regulations and with utility company requirements.

2. Materials for temporary facilities may be new or used, but must be adequate in capacity for the required usage, must not create unsafe conditions, and must not violate requirements of applicable codes and standards.

3. Temporary Utilities

a. Temporary Electricity and Lighting: The Contractor shall make all arrangements with the local utility company, provide service required for power and lighting, install circuit and branch wiring, install distribution boxes located so that power and lighting is available at field office site throughout the construction period, and provide adequate artificial lighting for all areas of work when natural light is not adequate for work and for areas accessible to the public.

b. Temporary Heat and Ventilation

1) The Contractor shall provide temporary heat and ventilation as required to maintain adequate environmental conditions to facilitate the progress of the Work, to meet specified minimum conditions for the installation of materials, and to protect materials and finishes from damage due to temperature or humidity. Portable heaters shall be standard U.L. approved units complete with controls.

c. Temporary Telephone Service: The Contractor shall make all arrangements with the local and long distance telephone service companies and provide direct line telephone services at the construction site for the use of personnel.

d. Temporary Water

1) The Contractor shall provide water for construction and testing purposes, shall install branch piping with taps located so that water is available throughout the construction by the use of hoses, and shall protect piping and fittings against freezing as applicable to the work site.

2) The Contractor may use the existing water supply systems for testing, flushing, and construction water only at the direction of the Owner/owner. The Contractor shall pay for all water used in performing the above functions in accordance with the Owner's/Owner's established water rate schedules. The Contractor shall install at each and every connection to a public water supply a backflow preventer and all other appurtenances required by the Owner/Owner, codes and regulations. Contractor shall be required to meter all water used.

e. Temporary Sanitary Facilities: The Contractor shall provide sanitary facilities in compliance with laws and regulations.

f. Payment for Utilities: The Contractor shall make all necessary applications and arrangements and pay all fees and charges for electrical energy for power and light, gas energy, water and sanitary service, and telephone service required for the construction and testing of the Work under this Contract during its entire progress. He shall provide and pay for all temporary piping, valves, wiring, switches, connections, and meters. All telephone charges shall be paid by the Contractor; including long distance calls.

4. Temporary Offices and Buildings

a. Furnish, install and maintain the following offices or buildings for the Owner/Engineer and the Contractor during the entire construction period:

1) Contractor's field office
2) Owner/Engineer's field office
3) Storage or work sheds for construction

b. Make arrangements to provide a suitable location for all temporary structures, buildings or storage sheds. During the preconstruction meeting, submit for approval a sketch of each temporary building and shed and a location map within the project site indicating building/shed layout, temporary drainage and utilities, access, and parking.

c. Construction: At Contractor's option, portable or mobile buildings may be used, but must be structurally sound, weather tight, with floors raised above-ground and appropriately insulated for occupancy and storage requirements. Mobile buildings, when used, must be provided with steps and landings at the entrance door and hurricane tie-downs.

d. Prohibited Use:

1) Permanent facilities shall not be used for field office or for storage.
2) Temporary or permanent facilities shall not be used for living quarters.

e. Contractor's Office and Facilities

The Contractor shall provide and maintain an office on the project site with telephone (including facsimile), utilities (with water supply) and facilities where he or a responsible representative of his organization may be reached at any time while work is in progress. Such office shall be within the immediate area of the project site.

f. Owner/Engineer's Field Office: (Provide at site within 15 days after Notice to Proceed).

1) The Contractor shall make all provisions and pay all installations and other costs for the Owner/Engineer's construction office including telephone service, power service, exterior lights and any dry type photocopy machine. The Contractor shall pay all monthly charges for the various services provided for the Owner/Engineer's office throughout the construction period.

g. Maintenance and Cleaning

1) Furnish, replace, and replenish light bulbs, fluorescent tubes, toilet paper, paper towels, soap, bottled water, and other things required to maintain offices in a clean condition.

2) Wash floor and clean washroom fixtures at least once each week. Wash windows when needed or when requested by Owner/Engineer. Sweep floor and dust furnishings daily.

3) Maintain office in first class condition for the duration of the project and for 30 days after final completion.

h. Removal

1) Remove temporary field offices, contents, and services at a time when no longer needed.

2) Remove foundations and debris; grade site to required elevations and clean the areas.

5. First Aid Station: The Contractor shall keep on the site, at each location where Work is in progress, a completely equipped first aid kit and shall provide ready access thereto at all times.

I. CONSTRUCTION PHOTOGRAPHS

Pre-construction Documentation: The Contractor shall engage the services of a professional videographer to record pre-construction conditions no more than 45 days and no less than five days prior to construction. The videographer shall be a commercially known firm skilled and regularly engaged in the business of continuous pre-construction color audio-visual tape documentation. The videographer shall not be an employee of the Contractor or in any way associated with the Contractor. No construction shall begin prior to the review and approval of the respective videotapes by the Owner and Engineer. All videotapes and written records shall become the property of the Owner.

1. Video Recording

a. Type: E.I.A. standard video with minimum horizontal resolution of 525 lines, 60 fields.

b. Screen Display: time of day, month, day and year.

c. Coverage: record all existing surface features located within the area affected by construction featuring existing improvements and vegetation and existence of any faults, defects or fractures thereto.

d. Each video tape shall be permanently labeled and provided with a log of the video's content indexed by Video Unit Counter Numbers with corresponding subject data (street name, direction, engineering station numbers and date).

e. Recording shall be performed on bright sunny days using a stable continuity of coverage at a rate not exceeding five miles per hour, with camera not mounted more than 10 feet above ground.

2. Audio Recording

a. Single voice narrative recording corresponding and simultaneous with the video recording.

b. Provide commentary to assist viewer orientation; street name, side, direction of travel, house addresses, engineering station numbers.

3. Monthly Progress Photographs: The Contractor shall employ a competent photographer regularly engaged in the business to take construction record photographs periodically during the course of the Work.

a. PDF: Ddate imprinted high resolution color pictures to be provided to the Owner with each respective Application for payment and distributed by the Owner

b. Required Photographs and Views: Provide color aerial photograph of project from beginning Station to ending Station.

c. Required Photographs and Views: Provide minimum three (3) views each at the following locations for <u>pipelines</u>:

1) Utility conflicts/relocations
2) Exploratory excavations
3) Boring and jacking
4) Stream or canal crossing
5) Typical valve installation
6) Typical air release
7) Typical hydrant assembly
8) Pipeline laying prior to backfilling

d. Pictures shall be maintained by the Contractor for two (2) years after final completion.

e. Photo Identification for each picture

1) Name of project
2) Description of view
3) Orientation of view
4) Date and time
5) Name and address of photographer
6)

J. CLEANING

1. During Construction

a. During construction of the Work, the Contractor shall, at all times, keep the site of the Work and adjacent premises as free from material, debris and rubbish as is practicable and shall remove the same from any portion of the site if, in the opinion of the Owner/Engineer, such material, debris, or rubbish constitutes a nuisance or is objectionable.

b. Provide on-site containers for the collection of waste materials, debris and rubbish and remove such from the site periodically by disposal at a legal disposal area away from the site.

c. The Contractor shall remove from the site all surplus materials and temporary structures when no longer necessary to the Work at the direction of the Owner/Engineer.

2. Final Cleaning

a. At the conclusion of the Work, all equipment, tools, temporary structures and materials belonging to the Contractor shall be promptly taken away, and he shall remove and promptly dispose of all water, dirt, rubbish or any other foreign substances. Employ skilled workmen for final cleaning. Thoroughly clean all installed equipment and materials to a bright, clean, polished and new appearing condition. Remove grease, mastic, adhesives, dust, dirt, stains, fingerprints, labels, and other foreign materials from sight-exposed interior and exterior surfaces. Broom clean exterior paved surfaces; rake clean other surfaces of the grounds.

b. The Work shall be left in a condition as shown on the Drawings and the remainder of the site shall be restored to a condition equal or better than what existed before the Work.

c. Prior to final completion Contractor shall conduct an inspection of all work areas to verify that the entire Work is clean. The Owner/Engineer will determine if the final cleaning is acceptable.

K. PROJECT SIGNS

Two project signs shall be furnished and installed on the project site by the Contractor at locations determined by the Owner/Engineer. The Contractor may be required to

relocate these identifying project signs during the progress of the Work. Each sign shall be approximately 4 x 4 feet in size, and shall contain the project name, construction cost and names of the Owner or governing council, Engineer and Contractor. Wood shall be pressure treated and fasteners galvanized.

L. DAILY REPORTS

1. The Contractor shall submit to the Owner's Representative Daily Reports of Construction activities including non-work days. The reports shall be complete in detail and shall include the following information:

   a. Days from Notice to Proceed; Days remaining to Substantial and Final Completion;
   b. Weather information;
   c. Work activities with reference to the BCM schedule activity numbers (including manpower, equipment and daily production quantities for each individual activity);
   d. Major deliveries;
   e. Visitors to site;
   f. Test records;
   g. New problems, and;
   h. Other pertinent information.

2. A similar report shall be submitted for/by each Subcontractor.

3. The report(s) shall be submitted to the Resident Project Representative within two (2) days of the respective report date. The CONTRACTOR's Superintendent or Project Manager shall sign each report.

   If a report is incomplete, in error, or contains misinformation, the Resident Project Representative shall return a copy of the report to the CONTRACTOR's Superintendent or Project Manager with corrections noted. When chronic errors or omissions occur, the CONTRACTOR shall correct the procedures by which the reports are produced.

1.08 CONSTRUCTION NOT PERMITTED

A. USE OF EXPLOSIVES

1. No blasting shall be done except upon approval by the Owner and the governmental agency or political subdivision having jurisdiction. When the use of explosives is approved by the Owner as necessary for the execution of the Work, the Contractor shall use the utmost care so as not to endanger life or property, and assume responsibility for any such damage resulting from his blasting operations, and whenever directed, the number and size of the charges shall be reduced. All

explosives shall be stored in a secure manner and all such storage places shall be marked clearly, "DANGEROUS EXPLOSIVES" and shall be in care of competent watchmen. All permits required for the use of explosives shall be obtained by the Contractor at his expense. All requirements of the governmental agency issuing permit shall be observed.

B. BURNING

1. Do not burn combustible materials. Remove all cleared material from the Work site and dispose of in accordance with all local laws, codes, and ordinances. At the contractor's option, chipping operations may be substituted when the tree species, and soundness is appropriate for such use.

C. VIBRATORY ROLLERS

1. No compaction using vibratory rollers shall be done except upon approval by the Owner. Should the use of vibratory roller compaction be approved by the Owner as necessary for the execution of the Work, the Contractor shall use the utmost care so as not to endanger life or property, and assume responsibility for any such damage resulting from the vibratory compaction.

1.09 PROJECT MEETINGS

A. GENERAL

1. The Contractor shall attend all meetings to ascertain that work is expedited consistent with the Contract Documents and construction schedules.
2. Representatives of the Owner, Engineer, Contractor, subcontractors, suppliers and utility owners attending meeting shall be qualified and authorized to act on behalf of the entity each represents.

3. The Contractor will schedule and administer the pre-construction meeting, periodic progress meetings, and specially called meetings throughout the progress of the work (i.e., prepare agenda for meetings, make physical arrangements for meetings and, preside at meetings, prepare meeting minutes). A copy of the minutes of each progress meeting will be available at the next scheduled meeting.

4. Contractor shall record the Pre-construction Meeting and each progress meeting in their entirety, and shall provide the Owner/Engineer a copy of such recording, having good quality and clarity.

B. PRE-CONSTRUCTION MEETING

1. A pre-construction meeting shall be held no later than twenty (20) days after date of Notice of Award and before the effective date of Notice to Proceed at a central site, convenient for all parties, designated by the Owner/Engineer.

2. Attendance:

   a. Owner's Resident Project Representative
   b. Other Owner Representatives
   c. Engineer and other consultants
   d. Contractor and his superintendent
   e. Major subcontractors
   f. Major suppliers
   g. Utility(ies) Representatives
   h. Others as appropriate

3. Suggested Agenda: This meeting is intended to introduce the various key personnel from each organization and to discuss the requirements of the Contract Documents as to how they specifically pertain to this Project and Work. The Owner/Engineer will prepare a "Pre-construction Booklet" for this meeting outlining specific construction administration procedures, general construction requirements and other special considerations. The Contractor shall provide information as requested by the Owner/Engineer in the development of the Pre-construction Booklet.

C. PROGRESS MEETINGS

1. Progress meetings will be held every seven (14) days or less with the first meeting thirty (30) days after the Pre-construction Meeting or seven (14) days or less after the effective date of Notice to Proceed.

2. Progress meeting dates and time shall be scheduled at the Pre-construction Meeting for the entire duration of the Work on a weekly calendar basis. All progress meetings shall be held at the project field office of Contractor.

3. Attendance:

   a. Owner's Resident Project Representative
   b. Other Owner Representatives
   c. Engineer/prof. Consultants, as needed
   d. Contractor
   e. Subcontractors as appropriate to agenda
   f. Suppliers as appropriate to the agenda
   g. Utility Representatives
   h. Others as appropriate

4. Suggested Agenda: A general agenda for Progress Meetings will be provided to the Contractor at the Pre-construction Meeting.

5. The Contractor shall study previous meeting minutes and current agenda items in order to be prepared to discuss pertinent topics such as deliveries of materials and equipment, progress of the Work, etc.

6. The Contractor is to provide a current shop drawing log at each progress meeting, as well as evidence of the completion of Project Record Drawings concurrent with Work progress.

7. The Contractor is to provide an updated Work Plan at each progress meeting.

1.10 WORK SCHEDULES

A. INITIAL WORK SCHEDULE AND WRITTEN NARRATIVE:

Within 21 calendar days after contract award or at least three (3) days prior to the Pre-construction Conference, whichever is earlier, submit to the Owner/Engineer an Initial Work Schedule for the project.

Submit three (3) copies of an Initial Work Schedule that shows the various activities of work in sufficient detail to demonstrate a reasonable and workable plan to complete the project within the Contract time. Show the order and interdependence of activities and the sequence for accomplishing the work. Describe all activities in sufficient detail so that the Engineer can readily identify the work and measure the progress on of each activity. Show each activity with early start and early finish dates and late start and late finish dates, activity float and total float, a duration, and a monetary value. Include activities for procurement, fabrication and deliver of materials, plant, and equipment, and review time for shop drawings and submittals. Include milestone activities when milestones are required by the Contract Documents. In a project with more than one phase, adequately identify each phase and its completion date, and do not allow activities to span more than one phase.

Conduct sufficient liaison and provide sufficient information to indicate coordination activities with utility owners that have facilities within the limits of construction have been resolved. Incorporate in the schedule any utility adjustment schedules included in the Contract Documents unless the utility company, the Contractor and the Owner mutually agree to changes to the utility schedules shown in the Contract. Include all utility relocation periods given in the Contract Documents at durations shown and pursuant to referenced construction sequence provided.

Submit a Written Narrative with the Initial Work Schedule, consisting of a concise written description of the construction plan which shall include the following:

1. Describe work to be performed per construction phase;

2. Describe work to be performed within each pay item including the type and quantity of equipment, and material to be used and subcontractor information if applicable;

3. Describe planned production rates by pay item quantities (e.g., cubic yards of excavation per day/week);

4. Describe planned workdays per week and number of hours per day.

5. Describe scheduled holidays as established by the Contract Supplementary Conditions.

The Engineer will return inadequate schedules and narratives to the Contractor for correction. Resubmit a corrected Initial Work Schedule and Written Narrative within 10 calendar days from the date of the Engineer's return transmittal. When approved, the Engineer will use this initial schedule and narrative as the baseline against which to measure the progress of the Work.

If the Contractor fails to finalize the Initial Work Schedule and Written Narrative in the time specified, the Owner will withhold all Contract payments until the Engineer approves the schedule and narrative.

Owner shall not be liable to the Contractor for any loss damage, cost or expense arising out of or resulting from delay, interference, interruption, or acceleration of Contractor's Work by any of the activities of the Utility Owners.

B. UPDATE WORK PROGRESS SCHEDULE

Updated Work Progress Schedules and requested Updated Written Narratives shall meet all the detail and informational requirements of the Initial Work Schedule and Written Narrative.
Submit three (3) copies of an updated Work Progress Schedule with each month's Application for Payment or when:

1. A delay occurs in the completion of a controlling work activity.
2. A delay occurs which causes a change in a controlling work activity.
3. The actual prosecution of the work is different from that represented on the current work progress schedule.
4. There is an addition, deletion, or revision of activities required by a contract modification.

Submit an updated Written Narrative only when the Engineer makes written request for same. Furnish updated Written Narrative with the next month's Application for Payment dated after Engineers written request.

The Engineer will return inadequate updated schedules and requested updated narratives to the Contractor for correction. Resubmit a corrected Updated Work Progress Schedule and requested Updated Written Narrative within 10 calendar days from the date of the Engineer's return transmittal. When approved, the Engineer will

use this updated schedule and requested updated narrative as the baseline against which to measure the progress of the Work.

If the Contractor fails to finalize an updated schedule and requested updated narrative in the time specified, the Owner will withhold all Contract payments until the Engineer approves the updated schedule and requested updated narrative.

C. WORK PLAN

The Contractor shall submit to the Owner/Engineer a weekly work plan on the required form (FDOT Form 700-010-15, Construction 07/94) identifying controlling work items expected to be underway during the upcoming weekly period.

1. Objective and Definition

   The objective of the work plan shall be to identify those major controlling work items which if not worked on during the planned period, would delay project completion as set by the Contractor's approved Work Progress Schedule(s). Critical activities as detailed in the Contractor's approved Work Progress Schedule(s) are considered controlling items of work. Approval of the work plan is by the Engineer.

2. Responsibility

   The Contractor shall be responsible for identifying and executing work items necessary to insure project completion according to the work schedule. The Contractor will insure the work proposed complies with all sequencing or other requirements established in the contract special provisions, plans or the standard specifications.

3. Work Plan Meeting

   The Contractor's work plan identifying controlling work items expected to be underway during the upcoming weekly period shall be submitted at and discussed during scheduled weekly construction progress meetings.

D. ANTICIPATED UNFAVORABLE WEATHER DAYS

The CONTRACTOR expressly acknowledges that unfavorable working conditions will exist at the site of the Work as a result of normal local weather. The anticipated number of unfavorable weather days per respective month is as follows:

ANTICIPATED UNFAVORABLE WEATHER DAYS			
Month	**Normal Local Bad Weather Days Per Month**	**Month**	**Normal Local Bad Weather Days Per Month**
January	**2**	**July**	**6**
February	**3**	**August**	**6**
March	**3**	**September**	**5**
April	**2**	**October**	**3**
May	**3**	**November**	**2**
June	**5**	**December**	**2**

Contract "Unfavorable Weather Days" shall be determined from the above "Anticipated Unfavorable Weather Days" table and shall be counted from the effective date of Contract Notice to Proceed through the date of Contract Final Completion. To-be-anticipated unfavorable weather days shall be prorated through partial months and shall be rounded up or down as per standard practice (i.e., 0.1 through 0.4 days shall be rounded down to the next whole number and 0.5 through 0.9 shall be rounded up to the next whole number).

Conversion of calendar days to work days shall be as follows:

1. To convert calendar days to work days for a six (6) day workweek, divide calendar days by 1.17.

2. To convert calendar days to work days for a five (5) day workweek, divide calendar days by 1.40.

   The established Contract Time(s) includes an allowance for delays caused by the effects of unfavorable working conditions as a result of normal local weather.

An anticipated unfavorable weather day is defined as follows:

1. The CONTRACTOR being unable to work at least 50% of the normal work day on pre-determined controlling work items due to adverse weather conditions; or

2. The CONTRACTOR must make major repairs to work damaged by weather, provided that the damage is not attributable to the CONTRACTOR's failure to perform or neglect; and provided that the CONTRACTOR was unable to work at least 50% of the normal work day on pre-determined controlling work items.

The CONTRACTOR shall take reasonable precautions to mitigate the impact of such unfavorable weather conditions and shall diligently attempt to perform the Work.

E. UNFAVORABLE WEATHER ALLOWANCE

Local weather conditions shall be considered in the planning and scheduling of the Work to ensure the completion of the Work within the Contract Time(s) provided. No time extension(s) will be granted for the Contractor's failure to take into account such weather conditions for the location of the Work and for the period of time in which the Work is to be accomplished.

The total expected loss of working days stipulated in 01001.1.10.D of the Contract General Requirements shall be included in a separate identifiable controlling work activity labeled "Unfavorable Weather Days Allowance" to be included in the project schedule prior to the required Substantial Completion Date. When unfavorable weather days are experienced, and are approved as such by the Engineer, the Contractor shall either:

1. Increase the duration of the current controlling work activity(ies) by the number of unfavorable weather days experienced, or

2. Add a controlling work activity to the schedule to reflect the occurrence of the unfavorable weather day(s).

The duration of the unfavorable weather day allowance activity shall be reduced as weather days are experienced and included in the schedule. Any remaining unfavorable weather days in the unfavorable weather day allowance activity at the completion of the project shall be considered as float and shall not be for the exclusive use or benefit of either the Owner or Contractor.

F. RESTRICTED CONSTRUCTION AREAS - NOT APPLICABLE

1.11 SHOP DRAWINGS, WORKING DRAWINGS AND SAMPLES

A. GENERAL

The Contractor shall submit to the Engineer for review and approval, such working drawings, shop drawings, test reports and data on materials and equipment, and material samples as specified in Specification Section 01340, in the Contract Drawings and as required pursuant with the FDOT Standard Specifications for Road and Bridge Construction 2010 and any supplements or revisions thereto.

B. SHOP DRAWINGS AND SAMPLES

1. Contractor shall submit Shop Drawings to Engineer for review and approval in

accordance with the acceptable schedule of Shop Drawings and Sample submittals. All submittals will be identified as Engineer may require and in the number of copies specified in the General Requirements. The data shown on the Shop Drawings will be complete with respect to quantities, dimensions, specified performance and design criteria, materials, and similar data to show Engineer the services, materials, and equipment Contractor proposes to provide and to enable Engineer to review the information for the limited purposes required by paragraph 6.17.D. of the Contract General Conditions. Each Sample will be identified clearly as to material, Supplier, pertinent data such as catalog numbers, and the use for which intended and otherwise as Engineer may require to enable Engineer to review the submittal for the limited purposes required by paragraph 6.17.D. of the Contract General Conditions. The numbers of each Sample to be submitted will be as specified in these specifications, in the Contract Drawings and or as required pursuant with the FDOT Standard Specifications for Road and Bridge Construction 2010 and any supplements or revisions thereto.

2. Contractor shall also submit Samples to Engineer for review and approval in accordance with the acceptable schedule of Shop Drawings and Sample submittals. Each Sample will be identified clearly as to material, Supplier, pertinent data such as catalog numbers, and the use for which intended and otherwise as Engineer may require to enable Engineer to review the submittal for the limited purposes required by paragraph 6.17.D of the Contract General Conditions. The numbers of each Sample to be submitted will be as specified in the Specifications, in the Contract Drawings and or as required pursuant with the FDOT Standard Specifications for Road and Bridge Construction 2010 and any supplements or revisions thereto.

3. Where a Shop Drawing or Sample is required by the Contract Documents or the schedule of Shop Drawings and Sample submittals acceptable to Engineer as required by paragraph 2.07 of the Contract General Conditions, no related Work shall be performed prior to Engineer's review and approval of the pertinent submittal.

C. WORKING DRAWINGS

Working Drawings are defined as the Contractor's plan for temporary structures such as temporary bulkheads, support of open cut excavation, support of utilities, groundwater control systems, forming and false work for underpinning, and for such other work as may be required for construction but does not become an integral permanent part of the Project. The Contractor shall provide the following with respect to Working Drawings:

1. Working Drawings shall be submitted to the Engineer where required by the Contract Documents, requested by the Engineer or as required pursuant with the FDOT Standard Specifications for Road and Bridge Construction 2010 and any

supplements or revisions thereto, and shall be submitted at least thirty (30) calendar days (unless otherwise specified by the Engineer) in advance of their being required for the work.

2. Working Drawings shall be prepared, signed and sealed by a registered professional engineer currently licensed to practice in the State of Florida. Working Drawing submittals are required to verify compliance with this provision. The Engineer will not check designs prepared by the Contractor's professional engineer. The Contractor and the Contractor's engineer assume all risks of error; the Owner/Engineer shall have no responsibility therefore.

D. SUBMITTAL PROCEDURES

1. Preliminary Shop Drawing Data: Within twenty-one (21) calendar days after the Contract Award or at least three (3) days prior to the Pre-construction Conference, whichever is earlier, the Contractor shall submit to the Engineer a complete listing of manufacturers for all items for which shop drawings are to be submitted.

2. Shop Drawing Submittal Schedule: Within 30 days after the Pre-construction Conference or on the effective date of Notice to Proceed, whichever is earlier, the Contractor shall submit to the Engineer a complete schedule of shop drawing submittals fixing the respective dates for submission, the beginning of manufacture, testing, and installation of materials, supplies and equipment, noting those submittals critical to the progress schedule.
3. Submittal Log: An accurate updated log of submittals shall be provided by the Contractor for review by the Owner/Engineer at each scheduled progress meeting.

4. Before submitting each Shop Drawing or Sample, Contractor shall have determined and verified:

   a. all field measurements, quantities, dimensions, specified performance criteria, installation requirements, materials, catalog numbers, and similar information with respect thereto;

   b. all materials with respect to intended use, fabrication, shipping, handling, storage, assembly, and installation pertaining to the performance of the Work;

   c. all information relative to means, methods, techniques, sequences, and procedures of construction and safety precautions and programs incident thereto; and

   d. Contractor shall also have reviewed and coordinated each Shop Drawing or Sample with other Shop Drawings and Samples and with the requirements of the Work and the Contract Documents.

5. Each submittal shall bear a stamp and specific written indication that Contractor has satisfied Contractor's obligations under the Contract Documents with respect to Contractor's review and approval of that submittal. Each respective shop drawing within a given submittal set shall bear original Contractor's stamp and signature.

6. Submit to the Engineer all shop drawings, samples and schedules sufficiently in advance of construction requirements to provide no less than thirty (30) calendar days for checking, and appropriate action.

7. Contractor shall submit shop drawings in a digital format (PDF) of each shop drawing submittal for review. The Contractor will distribute shop drawings as follows for the indicated action taken:

    a. One copy for Owner's file;

    b. One copy for Engineer's file;

    c. One copy for Sub-consultant's file (if any);

    d. One copy for Owner's Resident Project Representative's file; and

    e. All other remaining copies to Contractor (Note, Contractor shall distribute additional copies to subcontractors as required).

8. All shop drawing submittals shall be accompanied with a transmittal letter (Form 00864 Shop Drawing Transmittal) providing the following information:

    a. Project Title and Contract Number;

    b. Date;

    c. Contractor's name and address;

    d. The number of each shop drawing, project data, and sample submitted; and

    e. Submittal Log Number conforming to respective FDOT or utility specification section numbers;

        1) Submit each respective FDOT or utility specification section separately;

        2) Identify each shop drawing item required under respective FDOT or utility specification section; and

        3) Identify resubmittals using respective FDOT or utility specification

section followed by A (first resubmittal), B (second resubmittal), etc.

9. When reviewed by the Engineer, each of the shop drawings will be identified as having received such review, being so stamped and dated. Shop drawings stamped "REJECTED" will be returned to the Contractor for correction and resubmittal with the required correction indicated on the shop drawing or listed on a "Shop Drawing Review Comment Sheet."

10. At the time of each submittal, Contractor shall give Engineer specific written notice of such variations, if any, that the Shop Drawing or Sample submitted may have from the requirements of the Contract Documents, such notice to be in a written communication separate from the submittal; and, in addition, shall cause a specific notation to be made on each Shop Drawing and Sample submitted to Engineer for review and approval of each such variation.

E. ENGINEER'S REVIEW

1. Engineer will timely review and approve Shop Drawings and Samples in accordance with the schedule of Shop Drawings and Sample submittals acceptable to Engineer. Engineer's review and approval will be only to determine if the items covered by the submittals will, after installation or incorporation in the Work, conform to the information given in the Contract Documents and be compatible with the design concept of the completed Project as a functioning whole as indicated by the Contract Documents.

    a. Engineer will review and return shop drawing submittals within 30 calendar days of receipt.

2. Engineer's review of shop drawings, data, and samples submitted by the Contractor to interpret the work depicted on such submittal shall be for general conformance with the design concept and general compliance with the Contract Document requirements. The Engineer's review and approval, if any, constitutes a limited, conditional or qualified permission to use such materials, equipment or methods and does not constitute an approval of dimensions, quantities, details of the material, equipment, device or item submitted.

3. Engineer's review and approval will not extend to means, methods, techniques, sequences, or procedures of construction (except where a particular means, method, technique, sequence, or procedure of construction is specifically and expressly called for by the Contract Documents) or to safety precautions or programs incident thereto. The review and approval of a separate item as such will not indicate approval of the assembly in which the item functions.

4. Engineer's review and approval of Shop Drawings or Samples shall not relieve Contractor from responsibility for any variation from the requirements of the

Contract Documents unless Contractor has in writing called Engineer's attention to each such variation at the time of each submittal as required by paragraph 6.17.D.3 of the Contract General Conditions and Engineer has given written approval of each such variation by specific written notation thereof incorporated in or accompanying the Shop Drawing or Sample approval; nor will any approval by Engineer relieve Contractor from responsibility for complying with the requirements of paragraph 6.17.D.1 of the Contract General Conditions.

F. RESUBMITTAL PROCEDURES

1. Contractor shall make corrections required by Engineer and shall return the required number of corrected copies of Shop Drawings and submit as required new Samples for review and approval. Contractor shall direct specific attention in writing to revisions other than the corrections called for by Engineer on previous submittals.

2. Contractor shall not begin any work covered by a shop drawing returned for correction until a revision or correction thereof has been reviewed, approved and returned to the Contractor by the Engineer. The Contractor shall be responsible for and bear all costs for damages that may result from the ordering of any material or from proceeding with any part of the work prior to the review and approval by the Engineer of the necessary shop drawings.

3. Resubmittals will be handled in the same manner as first submittals. On resubmittals, the Contractor shall direct specific attention on the transmittal and on resubmitted shop drawings to revisions other than the corrections requested by the Engineer on previous submissions. The Contractor shall make any corrections required by the Engineer.

4. The Engineer will review a submittal/resubmittal a maximum of two (2) times after which the cost of review will be borne by the Contractor at the Engineer's standard hourly rate.

G. SAMPLES

The Contractor shall furnish, for the approval of the Engineer, samples required by the Contract Documents or requested by the Engineer.

1. Samples shall be delivered to the Engineer as specified or directed. The Contractor shall prepay all shipping charges on samples.

2. Approval of a sample shall be only for the characteristics or use named in such approval and shall not be construed to change or modify any Contract requirements. Materials or equipment for which samples are required shall not be used in work until approved by the Engineer. Materials and equipment incorporated in Work shall match the approved samples.

3. Approved samples not destroyed in testing shall be sent to the site of the Work. Approved samples of the hardware in good condition will be marked for identification and may be used in the Work. Samples that failed testing or were not approved will be returned to the Contractor at his expense, if so requested at the time of submission.

1.12 PROJECT RECORD DOCUMENTS

A. The Contractor shall maintain at the site, for the Owner, one record copy of the following to be submitted to the Engineer for the Owner at Project Closeout. (Section 01720)

1. Conformed Drawings
2. Conformed Specifications
3. Addenda
4. Change Orders and other modifications to the Contract
5. Construction Progress Schedules
6. Field Orders
7. Contractor's Request for Additional Information
8. Approved Shop Drawings
9. Field Test Records
10. Project Record Drawings certified by Professional Land Surveyor or registered in the State of Florida

B. Store Record Documents and samples in Contractor's field office apart from documents used for construction. Do not use record document for construction purposes. Label each document "PROJECT RECORD" in neat large printed letters. File documents and samples in accordance with FDOT/CSI/CSC format.

C. Record information concurrently with construction progress. Do not conceal any work until required information is recorded.

1.13 START-UP – NOT APPLICABLE

1.14 CONTRACT CLOSEOUT

A. FINAL INSPECTION

1. When the Contractor considers the Work complete, he shall submit written certification that:

a. Contract Documents have been reviewed.

b. Work has been inspected for compliance with Contract Documents.

c. Work has been completed in accordance with Contract Documents.

d. Equipment and systems have been tested in the presence of the Owner's

Representative and are operational.

e. Work is completed and ready for final inspection.

2. The Engineer will make a final inspection to verify the status of completion after receipt of such certification.

3. Should the Engineer consider that the Work is incomplete or defective, he will promptly notify the Contractor in writing, listing the incomplete and defective work, to the best of his knowledge at that time. If the Engineer has inadvertently omitted any items from the list it shall not relieve the Contractor from his obligations shown on the Drawings and specified in the Project Manual. Contractor shall take immediate steps to remedy the stated deficiencies, and send a second written certification to the Engineer that the Work is complete.

4. When the Engineer finds that the Work is acceptable under the Contract Documents, he shall request the Contractor to make closeout submittals.

5. Should the Engineer perform re-inspection due to failure of the work to comply with the claims of status of completion made by the Contractor, the Owner will deduct the amount of any compensation or costs paid for additional inspections or tests from the final payment to the Contractor.

B. CONTRACTOR'S CLOSE-OUT SUBMITTALS TO ENGINEER

1. Evidence of compliance with requirement of governing authorities;

2. Project Record Documents;

3. Operating and Maintenance Data;

4. Warranties and Bonds (required for the Correctional Period and Maintenance Period);

5. Spare Parts and Maintenance Materials;

6. Contractor’s final list of all first-tier sub-contractors and materials suppliers;

7. Evidence of Payment, Affidavits and Release of Liens (Form Nos: 883-1 and No. 879-1);

8. Final Application for Payment, including “Consent of Surety to Final Payment” and final Change Order, if required. The final Application for Payment shall reflect all adjustments to the Contract Price;

9. Certificate of Substantial Completion;

10. Certificate of Final Inspection;

11. Certificate of Engineer; and

12. Certificate of Final Completion

1.15 SPECIAL PROJECT PROCEDURES

TABLE 01001-A PERMITS OBTAINED BY OWNER
Environmental Resource Permit Exemption (SJRWMD) #162778-10
Environmental Resource Permit (SJRWMD) #162778-9

END OF SECTION

SECTION 01010
SUMMARY OF WORK

PART 1 - GENERAL

1.01 LOCATION OF WORK

A. The construction work set forth in these contract documents is to be completed in the City of Ocoee as shown on the Drawings.

1.02 DESCRIPTION OF WORK

A. The W. Oakland Ave Reconstruction Project is a complete demolition and reconstruction of W. Oakland Ave between Taylor St. and S. Bluford Ave. The new roadway will consist of a two-way street divided by a 22-foot median with a 12-foot trail in the center of the median. The construction includes curb and gutter, new 12-foot asphalt roadway lanes, reconstructed stormwater system, potable water improvements, gravity sewer improvements, brick on-street parking, and 8-foot widewalks. Pipe diameters for the stormwater system include 24-inch RCP, 42-inch RCP, and 34”x53” ERCP as shown in the Drawings and listed in the Invitation to Bid. This project also includes the installation of a 6” PVC conduit for future underground power conversion. Finally, the project shall include removal of existing City utilities, roadway reconstruction, removal and replacement of driveways and curb, sidewalk, and sodding and other restoration as may be required.

B. The Contractor shall furnish all labor, materials, equipment, tools, services, and incidentals to complete all work required by these Specifications and as shown on the Drawings.

C. The Contractor shall perform the work complete, in place and ready for continuous service, and shall include repairs, tie-ins, testing, permits, clean up, replacements, and restoration required as a result of damages caused during this construction.

D. The Contractor shall furnish and install all incidental materials, equipment, and labor which is reasonably and properly inferable and necessary for the proper completion of the work, whether specifically indicated in the Contract Documents or not.

E. The Contractor shall comply with all County, State, Federal, and other codes and regulations applicable to the above construction work.

1.03 CONTRACTOR’S USE OF PREMISES

A. The Contractor shall assume full responsibility for the protection and safekeeping of products and materials stored at the job site. If additional storage or work areas are required, they shall be obtained by the Contractor at no additional cost to the Owner.

1.04 UTILITY RELOCATION

A. Contractor shall be responsible for identifying conflicts with existing water services lines and meters with the new roadway pavement and storm pipes. Contractor shall coordinate with City to have the utilities adjusted in the field.

END OF SECTION

SECTION 01025

MEASUREMENT AND PAYMENT

PART 1 - GENERAL

1.01 GENERAL PROVISIONS

A. Unit Price Contracts: The quantities of work to be done and materials to be furnished under a unit price contract, as given in the Bid Form, are to be considered as approximate only and are to be used solely for the comparison of Bids received and determining an initial Contract Price. The Owner does not expressly or by implication represent that the actual quantities involved will correspond exactly therewith; nor shall the Contractor plead misunderstanding or deception because of such estimate or quantities or of the character, location or other conditions pertaining to the Work. Payment to the Contractor will be made only for the actual quantities of work performed or material furnished in accordance with the Drawings and other Contract Documents, and it is understood that the quantities may be increased or diminished as provided in the General Conditions without in any way invalidating any of the unit prices bid.

B. Lump Sum Contracts: The quantities of work to be done and materials to be furnished, including all labor, equipment and incidentals required to complete the Work, are specified in the Contract Specifications and shown in the Contract Drawings. Payment to the Contractor of the lump sum price bid for the Work will be made and shall fully compensate the Contractor for the construction of the Work, completed and ready for continuous operation and use, in the manner contemplated by the Contract Documents.

C. Unit Price and Lump Sum Contracts

1. All schedules are given for the convenience of the Owner/Engineer and the Contractor and are not guaranteed to be complete. The Contractor shall assume all responsibility for the making of estimates of the size, kind, and quantity of materials and equipment included in work to be done under this Contract.

2. Where fittings are noted on the Drawings, such notation is for the Contractor's convenience and does not relieve him from laying and jointing different or additional items where required.

3. All Contracts shall be subject to 10 percent retainage as defined in the General Conditions and the Agreement.

1.02 ALLOWANCES

A. The Contractor shall include in the Total Bid Amount all cash allowances stated hereinafter. Items covered by these allowances shall be supplied for such amounts and by such persons as the Owner may direct.

B. The amount of the allowance shall be adjusted accordingly by Change Order to recognize the actual cost incurred by the Contractor. The Contractor shall submit appropriate documentation to validate the actual cost of the item.

C. Cash allowances for the purposes of bidding shall be in the following amounts and shall be so reflected in the Bid Form for the designated item:

1.03 SCHEDULE OF VALUES

A. Scope of Work

1. Submit to the Engineer a Schedule of Values within twenty-one (21) days after the Notice to Proceed.

2. A Schedule of Values shall be submitted for both lump sum and unit price contracts and the sum of the values in the schedule shall equal the Total Bid amount.

3. The Schedule of Values shall establish the actual value of the component parts of the Work and, unless objected to by the Engineer, shall be used as the basis for the Contractor's Applications for Payment.

B. Form and Content

1. Type the schedule on the Owner's 8-1/2 x 11-inch standard form. Contractor's standard forms and computer printout will be considered for approval by the Owner upon Contractor's request.

2. The values listed shall be the installed values of the component parts of the Work. Values shall reflect measurement and payment requirements for each individual item.

1.04 APPLICATIONS FOR PAYMENT

A. Applications for Payment shall be submitted by the Contractor to the Owner's resident project representative (RPR) in accordance with the schedule established by the General Conditions and Agreement between the Owner and the Contractor.

B. Format

1. Submit applications typed on forms provided by the Owner. The Contractor shall prepare itemized continuation sheets using the accepted Schedule of Values and attach them to the Application. Each item shall have an assigned dollar value for the current pay period, and a cumulative value for the project to date. Change Orders executed prior to the date of submission shall be listed at the end of the continuation sheets and shall be totaled separately.

2. The following items shall be included with each copy of the application for payment:

   a. Updated/Revised Progress Schedule
   b. Stored Material Log
   c. Updated Sub-contractor/Supplier List
   d. Consent of Surety
   e. Contractor's/Sub-contractor's/Supplier's Interim Affidavits
   f. Release of Liens for all Subcontractors and Material Suppliers for payment period in question.
   g. Invoices for Stored Materials

3. The Contractor shall certify, for each current pay request, that all previous payments received from the Owner, under his Contract, have been applied by the Contractor to discharge in full all obligations of the Contractor in connection with Work covered by prior applications for payment, and all materials and equipment incorporated into the Work are free and clear of all liens, claims, security interest and encumbrances. Contractor shall attach to each application for payment like affidavits by all Subcontractors and Suppliers. Contractor shall also attach a "Consent of Surety" to each application for payment. Additionally, a "Waiver and Release of Lien Upon Progress Payment" from each subcontractor and supplier shall be attached to each application for payment. Conditional waiver and release of liens contingent upon clearance of checks tendered in payment shall not be accepted by the Owner. The Contractor shall be allowed to withhold percent (%) retainage by release of liens equal to Owner withheld percent (%) retainage as only exception.

4. Submit seven (7) copies of each application to the RPR. Each copy shall include original signatures. The RPR shall review the application and verify quantities of installed work and stored materials. Upon his approval, he shall submit the application to the Owner for review. When the Owner finds the application properly completed and correct, he will make payment to the Contractor.

C. Work not installed in accordance with the requirements of the Contract Documents or materials not conforming to the Contract Documents will not be approved by the RPR, Owner or Engineer for payment.

D. The Application for Final Payment shall be prepared in accordance with Article

14.07 of the General Requirements – Final Payment.

1.05 MEASUREMENT AND PAYMENT

A. Methods of Payment

1. Unit Price Contracts/Items: Payment will be made for actual quantities of work properly installed as approved by the Owner unless otherwise indicated herein.

2. Lump Sum Contracts/Items: Payment will be made for each individual item on a percentage of completion basis as estimated by the Contractor and approved by the Owner. Quantities provided in the Schedule of Values are for the purpose of estimating the completion status for progress payments. Adjustments to costs provided in the accepted Schedule of Values may be made only by Change Order.

B. Methods of Measurement

1. Units of measurement shall be defined in general terms as follows:

a. Linear Feet (LF) or Linear Meters (M1)
b. Square Feet (SF) or Square Meters (M2)
c. Square Yards (SY) or Square Meters (M2)
d. Cubic Yards (CY) or Cubic Meters (M3)
e. Each (EA)
f. Sacks (SK)
g. Lump Sum (LS)

2. Unit Price Contracts/Items

a. Linear Feet (LF) or Linear Meters (M1) shall be measured along the horizontal length of the centerline of the installed material, unless otherwise specified. Pipe shall be measured along the length of the completed pipeline, regardless of the type of joint required, without deduction for the length of valves or fittings. Pipe included within the limits of lump sum items will not be measured.

b. Square Feet (SF), Square Yards (SY) Square Meters (M2), Cubic Yards (CY) Cubic Meters (M3), Each (EA) and Sacks (SK) shall be measured as the amount of the unit of measure installed within the limits specified and shown in the Specifications and Drawings. Slope angles and elevations shall be measured using land surveying equipment. Contractor shall provide supporting documentation (i.e. drawings, truck tickets, invoices, etc.) to verify actual installed quantities.

c. No measurement is required for Lump Sum (LS) items.

3. Lump Sum Contracts/Items

a. The Measurement of Work for lump sum contracts and/or items shall be based on the information provided in the Contract Documents and compiled through the Contractor's own field verifications, investigations and testing prior to Bidding.

C. The following describes the specific work and methods of measurement for the items listed in the Bid Schedule. Measurement and payment for each Bid Item shall include all labor, materials and equipment required to perform the work included for that respective item to provide a complete and operable installation. Related work not specifically listed or identified, but evidently necessary for sates factory completion of the item, shall be considered to be included.

D. No separate payment will be made for the following work, and its cost shall be included in the appropriate payment item:

- Clearing and grubbing (including disposal of excess material)
- Trench excavation, including necessary pavement removal and removal of vegetative surfaces
- Dewatering and disposal of surplus water
- Structural fill, backfill, and grading
- Manual excavation or soft digs
- Replacement of unpaved roadways, grass and shrubbery plots
- Cleanup
- Foundation and borrow materials, except as hereinafter specified
- Testing and placing system in operation
- Any material and equipment required to be installed and utilized for tests
- Pipe, structures, pavement replacement, restoration and/or appurtenances included within the limits of lump sum work, unless otherwise shown.
- No separate payment will be made for qeotextile fabric or filter fabric.
- Maintaining or detouring of the traffic
- Appurtenant work as required for a complete and operable system
- Surface restoration including removal and replacement of trees (under 4-inch diameter), shrubs, and sod disturbed by construction activities.
- Relocation and/or replacement of irrigation systems disturbed by construction
- Relocation and/or replacement of mail boxes disturbed by construction
- Furnishing adequate sanitary facilities for workers
- Adjustment of valve boxes
- Erosion control mechanisms
- Verification of existing survey
- Maintaining Driveway Access for Residences

Cleanup:

CONTRACTOR's attention is called to the fact that cleanup is considered a part of the work of construction. No payment will be made until cleanup is essentially complete.

At the end of each week of construction, the CONTRACTOR shall perform cleaning of the work site, to the satisfaction of the Owner, before proceeding to the next week's scheduled work.

Work Outside Authorized Limits:
No payment will be made for work constructed outside the authorized limits of work.

E. BID ITEMS

The following numbered paragraphs explain each of the bid items listed on the Bid Form. The paragraphs explain what is included in each item and how it will be paid.

Mobilization / Demobilization and General Requirements
The lump sum price also shall include all costs for mobilization and demobilization, recording preconstruction conditions on videotape, and preparation of an approved Construction Progress Schedule. No adjustments will be made to the contract price for increases in contract time. Lump Sum price shall include all items covered under General Requirements.

The lump-sum mobilization Bid Price in the Proposal should be limited to a maximum of five percent (5%) of the total Contract Price. Mobilization costs, estimated by the Contractor, that exceed five percent (5%) may be proportioned among and included within other pay item unit prices of the Contract. If the Contractor elects to exceed the five percent (5%) limit on the mobilization Bid Item, the amount exceeding this limit will be paid upon Final Acceptance of the Work.

Maintenance of Traffic
The lump sum price constitutes full compensation for all labor and materials required to implement the approved Traffic Control Plan to safely maintain traffic through and around the work zones for the duration of the project, including warning and regulatory signs, message boards, drums, barricades, warning lights, flaggers, and for the maintenance of existing driveways, temporary pavement, and removal and reinstallation of existing signs in conflict with construction as directed by the Engineer. No adjustments will be made to the contract price for increases in contract time.

Sediment Barrier and Inlet Protection System
The unit price constitutes full compensation for all labor and materials required to implement the approved Erosion Control Plan within all work zones, construction phases, and stockpile areas to prevent off-site transport of sediment. Cost includes furnishing, installing, and maintaining all material, staked silt fence, barricade fences, soil tracking devices, and sedimentation barriers. Also, includes costs for removal

and disposal of captured sediment, removal and disposal sediment off-site upon completion of construction (including any necessary permits and fees for disposal). The Contractor will be responsible for preparing a Storm Water Pollution Prevention Plan (SWPPP) in accordance with the U.S. EPA's NPDES regulations for Stormwater Discharge from Construction Activities under this pay item. This SWPPP document is not required to be submitted to Florida Department of Environmental Protection (FDEP), but will be required to be retained on the project site. The Contractor will also be responsible for submitting an executed Notice of Intent (NOI) form to the FDEP, along with an application fee, no less than forty-eight (48) hours prior to beginning construction. Upon substantial completion of the project, the Contractor will be responsible for submitting a Notice of Termination (NOT) to the FDEP, signifying termination of permit coverage for stormwater discharge from the construction activities.

Clearing and Grubbing / Removal of Existing Concrete/ Mailbox Relocate

Unit price also includes removal and disposal of asphalt, brick, base material, concrete drives, curbing, all storm structures, pipes, trees and shrubs, cost of saw cutting asphalt and concrete pavement and other obstructions necessary to be removed and for which other items of the contract do not specify the removal thereof. The unit pricing shall include all costs for removal of existing fences and relocation or replacement with new fence, and for the relocation or replacement of mailboxes, and removal of retaining wall, per construction plan. There is the possibility of existing brick pavers under the asphalt roadway surface. The removal of all layers of the existing roadway shall be included in the unit pricing. The unit price shall include the cost to salvage and palletize the existing brick. The unit pricing shall also include all costs for relocating, restraining and/or modifying existing water service lines and meters in conflict with new pavement and pipes as directed by Engineer, City Public Works Director and City Project Engineer.

Weigh Scale Removal & Restoration

The lump sum price constitutes full compensation for all labor and materials required for the removal of the weigh scale at 211 W Oakland Ave. The lump sum price includes costs for restoring the area between the proposed sidewalk and the building on the property. It shall be the responsibility of the Contractor to visit the site and review the weigh scale prior to bid.

Excavation, Embankment and Grading

Excavation, Embankment and Grading will be paid for at the contract unit price. Payment shall constitute full compensation for grading slopes, compaction, final dressing, embankment, excavation, replacement material, grading of shoulders, graded road connections, and replacement material, and all earthwork necessary to complete the project to lines and grades shown on the plans.

Type B – Stabilization/ Optional Base Group 09 Crushed Concrete

The unit price shall constitute full compensation for labor and materials of furnishing, grading, and stabilization of soils, and the installation of stabilized subgrade and crushed concrete base for construction of the new paved roadway as

shown on the plans.

Superpave Asphalt Concrete (SP-9.5)

Payment for constructing asphaltic concrete surface course shall be made at the Contract unit price per square yard (SY) placed and accepted, as shown on the Drawings, and shall be full compensation for all labor, material and equipment required to do the work. Payment shall include quality control testing, cleaning, sweeping and tack coat. No extra payment will be allowed for asphalt greater than that necessary to achieve the required grade, unless directed by the CITY or CITY's representative. All materials and workmanship shall conform to the FDOT Standard Specifications (latest edition) Section 334 – Superpave Asphalt Concrete. Note: Warm Mix Asphalt is an acceptable option, per the Contractor's request.

Milling Existing Pavement

Payment for milling existing asphaltic concrete pavement shall be made at the Contract unit price per square yard (SY), and shall include full compensation for all labor, material and equipment required to complete the work. Payment includes full compensation for all materials and equipment required to mill a maximum of 1.0" of existing asphaltic pavement, hauling, and cleaning up of milled material, labor and other incidentals. The measurement for payment under this item shall be the actual number of square yards of specified road satisfactorily milled. For Quality Control, if additional milled material is removed caused by scabbing, the contractor must immediately contact the City for direction. All materials and workmanship shall conform to the FDOT Standard Specifications (latest edition) Section 327 - Milling of Existing Asphalt Pavement.

Inlets (Curb and Valley Gutter) and Manholes

The unit price shall constitute full compensation for all work and materials necessary for the installation of the inlets and manholes. Payment includes all materials, foundation preparation, grates, covers, chains, locks, bolts, connecting existing pipes, and modification of existing inlets, per City of Ocoee engineering standards and FDOT Index No. 232 and 233.

Concrete Pipe Culvert

The unit price per linear foot includes payment for furnishing and installing pipe, furnishing and placing select bedding and backfill, placing regular backfill, final grading, wrapping of pipe joints with filter fabric per City of Ocoee engineering standards and FDOT Index No. 280.

Curb and Gutter Type F, Type F Drop, Curb Type B & D

The unit price shall constitute full compensation for all labor and materials necessary for the installation of concrete curb and/or curb and gutter. The unit price shall include all forming, contraction joint forming, reinforcement steel, expansion joint construction, finishing and backfilling and compaction

Concrete, Sidewalk, Curb Ramp 4" Thick, Detectable Warnings
The unit price shall constitute full compensation for all labor and materials necessary for the installation of concrete sidewalk and driveways. Payment includes installation of detectable warning devices and replacing existing driveways with similar materials (brick, pavers, etc.). Payment includes all materials, foundation preparation, reinforcing steel, joint forming (or sawing), placing, finishing and curing. Payment includes 3000 PSI concrete with fiber mesh.

Concrete, Driveways, Trail, Seating Pads 6" Thick
The unit price shall constitute full compensation for all labor and materials necessary for the installation of concrete driveways, 12' wide trail, and seating pad areas. Payment includes replacing existing driveways as shown on the plans. Payment includes all materials, foundation preparation, reinforcing steel, joint forming (or sawing), placing, finishing and curing. Payment includes 3000 PSI concrete with fiber mesh. Payment also includes the forming and installation of full depth 3/8" remolded expansion joints set ¼" below the surface filled with self-leveling sealant.

Pavers – Architectural - Roadway
The unit price shall constitute full compensation for labor and materials of furnishing and installation of concrete paver construction of the new roadway as shown on the plans. Unit price shall included the cost of the In-situ infiltrometers per the detail on the plans.

Bedding Stone
The unit price shall constitute full compensation for labor and materials of furnishing and installation of #57 bedding stone for construction of the new onstreet parking stalls as shown on the plans. Cost of the compacted sub-grade shall be included with this unit cost.

Performance Turf, Sod
The unit price shall constitute full compensation for all labor, materials, and incidentals for establishing a stand of grass by sodding in accordance with Article 21 of the City of Ocoee Engineering Standards, including site preparation and furnishing and placing sod, fertilizer, water, and maintenance. Sod destroyed or damaged by construction shall be replaced with the same existing type of grass in place prior to construction. All disturbed areas in the public right-of-way shall be sodded.

Pavement Markings & Thermoplastic Striping
Unit pricing includes all costs for for furnishing and installing temporary striping and thermoplastic striping, stop bars, railroad crossing pavement markings, and RPMs in accordance with FDOT Indices 17344, 17346 and 17352 as shown on construction drawings.

Remove Existing 2", 3" and 4" Pipe
Pay Item shall include the removal of the existing water mains at the proper locations in accordance with the Drawings and Specifications. The unit price to be paid for this item shall include all labor, equipment, excavation, dewatering, shoring, grout,

backfilling, compaction, and any necessary incidentals to perform the removal of the existing water mains. Pay item shall be measured and paid per linear feet.

2" PE Water Main

Pay Item shall include furnishing all labor, materials, and equipment required for open cut installation of PE (polyethylene) water main in the location shown on the plans. This may include, but is not limited to, dewatering, exploratory excavations, verifying location and depth of existing utilities, excavating, back filling, and compaction, properly color-coded pipe, pipeline identification and warning tape/wire, pipe joining, fittings, thrust restraints, stainless steel pipe stiffeners, flange adapters, installation of pipe by open cut methods, disposal of removed material and fluids, connecting to pipes at each end of the pipe, testing, restoration and cleanup. All materials shall follow the City's Approved Materials List unless noted otherwise by the City. Unit of measurement for this Pay Item shall be lineal feet of pipe installed as measured horizontally at the surface and as indicated on the plans. Any additional length that may be needed for entry, exit and depth are to be included as a part of the overall cost of the crossing. Payment this pay item shall be measured and paid per Linear Feet of pipe installed. Payment shall be made as follows: Pipe installation - 85%; Connections and Testing -15%.

4", 6", and 8" D.I. Water Main

Pay Items shall include furnishing all labor, materials, and equipment required for open cut installation of Ductile Iron Pipe water main in the location shown on the plans. This may include, but is not limited to, dewatering, exploratory excavations, verifying location and depth of existing utilities, excavating, back filling, and compaction, properly color-coded pipe, pipeline identification and warning tape/wire, pipe joining, all fittings (angle fittings, tees, reducers, etc.), thrust restraints, stainless steel pipe stiffeners, flange adapters, installation of pipe by open cut methods, installation of temporary jumper with City Hydrant Meter, disposal of removed material and fluids, connecting to pipes at each end of the pipe, testing, restoration and cleanup. All materials shall follow the City's Approved Materials List unless noted otherwise by the City. Unit of measurement for this Pay Item shall be lineal feet of pipe installed as measured horizontally at the surface and as indicated on the plans. Any additional length that may be needed for entry, exit and depth are to be included as a part of the overall cost of the crossing. Payment this pay item shall be measured and paid per Linear Feet of pipe installed. Payment shall be made as follows: Pipe installation - 85%; Connections and Testing -15%.

Gate Valve With Box (6" and 8")

Pay Items shall include furnishing and installing all labor, equipment and materials necessary for dewatering, excavation, sheeting, shoring, bracing, backfill, compaction, installation of valve and valve box, accessories, thrust restraint, testing, restoration and cleanup. All materials shall follow the City's Approved Materials List unless noted otherwise by the City. Payment for these pay items shall be paid Each.

Tapping Sleeve and Balbe Assembly (6")

Pay Item shall include furnishing all labor, materials, and equipment necessary to perform a wet tap to an existing main including a stainless-steel tapping sleeve and tapping valve, valve nut extension, nuts, bolts and other appurtenances, valve box, cover and concrete, clearing and grubbing, excavation, sheeting, shoring and bracing, dewatering, backfilling, compaction, restoration and clean up. All materials shall follow the City's Approved Materials List unless noted otherwise by the City. Payment for this pay item shall be paid Each**.**

Cut-In Connection to Existing Water

Pay Items shall include labor and furnishing or installation of equipment and materials necessary for survey, layout, dewatering, excavation, sheeting, shoring, bracing, compaction, connection of new water main to the existing water main, thrust restraints and fittings needed for the connection, for new and existing piping not already covered under separate pay item, disposal of unsuitable or excess material, suitable backfill, supporting existing utilities, leakage and pressure testing, restoration and cleanup. All materials shall follow the City's Approved Materials List unless noted otherwise by the City. Payment for this pay item shall be paid Each**.**

Line Stop Assembly (6")

Pay Item shall include furnishing and installing all labor, equipment and materials necessary for installing Line Stop including dewatering, excavation, sheeting, shoring, bracing, compaction, accessories, thrust restraint, testing, restoration and cleanup. Line Stop shall be a water tight body and will remain as the property of the city if line is to stay active. All materials shall follow the City's Approved Materials List unless noted otherwise by the City. Payment for this pay item shall be paid Each**.**

2" Blow Off Assembly

Pay Item shall include furnishing and installing all labor, equipment and materials necessary for installing blow-off assembly with meter box including dewatering, excavation, sheeting, shoring, bracing, compaction, saw cutting of roadway, gasket, seals, nuts, bolts and other appurtenances, coatings, thrust restraint, identification and warning tape, leakage testing, restoration and cleanup. All materials shall follow the City's Approved Materials List unless noted otherwise by the City. Payment for this pay item shall be paid Each**.**

Offset Air Release Valve Assembly (4" Diameter)

Pay Item shall include furnishing and installing all labor, equipment and materials necessary for installing air release valve assembly including dewatering, excavation, sheeting, shoring, bracing, compaction, saw cutting of roadway, gasket, seals, nuts, bolts and other appurtenances, in ground or above ground vault/box, coatings, thrust restraint, identification and warning tape, leakage testing, restoration and cleanup. All materials shall follow the City's Approved Materials List unless noted otherwise by the City. Payment for this pay item shall be paid Each**.**

Fire Hydrant Assembly

Pay Item shall include furnishing and installing all labor, equipment and materials necessary for installing Fire Hydrant, Assembly, and Hydrant Valve including gaskets

and restraining glands. All materials shall follow the City's Approved Materials List unless noted otherwise by the City. Payment for this pay item shall be paid Each**.**

Remove and Salvage Fire Hydrant

Pay Item shall include furnishing and installing all labor, equipment, and materials necessary for removal of fire hydrant, excavation and subsequent backfill incidental to removal. Payment shall also include salvage of materials which shall be given to the City. Payment for this pay item shall be paid Each**.**

Close, Plug, and Abandon Existing 3" Gate Valve

Pay Items shall include all labor and equipment to remove five (5) feet of water main from valve, all work and material needed such that valve does not leak, remove valve box/cover and backfilling excavation. Payment for this pay item shall be paid Each**.**

1" Water Service Connection

Pay item shall be the boring of a 1" PE single-service connection crossing under road pavement (opposite side of road as main or from end of main in pit to proposed meter location). Installed location shall be in general conformance with the Drawings and Specifications and as directed by City's representative. The unit prices to be paid for this pay item shall include all labor, equipment, materials, excavation, backfill, compaction, dewatering, shoring, polyethylene pipe, connection to proposed main piping, corporation stops, curb stops, service saddles, fittings, curb stop lock, boring, locate wire, flushing of individual water services, testing, and any necessary incidentals to provide completed water service from main to meter location for connections. All materials shall follow the City's Approved Materials List unless noted otherwise by the City. Payment for this pay item shall be paid Each**.**

8" PVC San Sewer (0-6Ft. Deep)

Pay Item shall include all material, labor and equipment to construct 8" PVC sanitary sewer gravity main to the line and grades as depicted by the plan sheets, pipe bedding (minimum of 6" thick of FDOT #57 stone) as needed for firm pipe support, coordination with existing utilities, protection of existing utilities including service connections, tree protection, excavation, sheeting, shoring and bracing, dewatering, backfill, compaction, grading, all testing, and clean-up. All materials shall follow the City's Approved Materials List unless noted otherwise by the City. This item shall be measured form inside wall to inside wall of manhole at the longest lengths. If the end of the pipe is a cap the length of pipe shall be from inside wall to the end of the pipe. Payment for this pay item shall be paid per Linear Foot**.**

4' Dia San Sewer Manhole (0-6Ft. Deep)

Pay Item shall include furnishing all labor, materials and equipment necessary for a complete sanitary manhole or drop manhole per plan with frame and cover, installation including excavation, sheeting, shoring and bracing, dewatering, backfill, compaction, and final grading, crushed rock base, connection of new or existing sanitary sewer, polyolefin sheeting for exterior joint sealing, adjustment of the manhole rim, interior and exterior surface coatings to provide a complete and

operable sanitary manhole. All materials shall follow the City's Approved Materials List unless noted otherwise by the City. Payment for this pay item shall be paid Each**.**

Single Lateral Service (0-8Ft. Deep)
Pay Item shall include all material, labor, and equipment to install 6" sanitary sewer lateral service from an 8" gravity main including a cleanout at property line. This payment shall encompass all construction to meet the City's Detail UT105 including the build out of the cleanout at the property line. All materials shall follow the City's Approved Materials List unless noted otherwise by the City. Payment for this pay item shall be paid Each**.**

Decorative Wall & Column
The unit price shall constitute full compensation for all labor, materials, and incidentals for constructing the decorative walls and columns shown in the plans. Unit pricing shall include all material costs for materials identified in wall and column details. Unit pricing includes cost for compacted base.

Landscape Irrigation System
The unit price shall constitute full compensation for all labor, materials, and incidentals for installing the irrigation system shown on the plans. Unit Price includes all piping, valves, sprinklers, specialties, controls, and wiring for an automatic-control irrigation system.

Mulch
The unit price shall constitute full compensation for all labor, materials, and incidentals to install dark brown or chocolate brown hardwood mulch. Depth of mulch shall be determined by plant type shown in the details in the plans.

Tree Root Barrier
The unit price shall constitute full compensation for all labor, materials, and incidentals to install a 36" deep root barrier in the areas identified on the plans.

Trees, Shrubs, Groundcover
The unit price shall constitute full compensation for all labor, materials, and incidentals, for installing the trees, shrubs, and groundcover as shown on the plans. The unit price shall include the cost of planting soil. The unit price for trees shall include the cost for stakes and guys. The unit price shall also include cost to properly store and water plant material should the plants be delivered or be otherwise available prior to installation.

6" PVC Schedule 40 Conduit F&I
The unit price shall constitute full compensation for all labor, materials, and incidentals, including pull string, for installing the 6" PVC schedule 40 or greater conduit as shown on the Duke Energy Underground Conduit Plan. Unit Price shall include all installation requirements provided in the Duke Energy "Customer Guide for Installing Conduit". Unit price shall also include the installation of pull boxes (at least two) which will be provided by Duke Energy.

END OF SECTION

SECTION 01027
APPLICATION FOR PAYMENT

PART 1 - GENERAL

1.01 DESCRIPTION

A. Scope of Work: Submit Applications for Payment to the Engineer in accordance with schedule established by Conditions of the Contract and Agreement between Owner and Contractor. Contractor shall use the Application and Certificate for Payment Form included in Section 00861 as the official pay request form.

B. Related Requirements Described Elsewhere:

1. Scope of Work Agreement: Section 00500.

2. Progress Payments, Retainages, and Final Payment: Section 00710: General Conditions as amended by Section 00800: Supplementary Conditions.

3. Schedule of Values: Section 00846.

4. Weekly Construction Progress Report: Section 00849.

5. Contract Closeout: Section 01001.

6. Project Record Drawings: Section 01720.

1.02 FORMAT REQUIRED

A. Submit applications typed on the form provided in Division 0, Section 00861: Application and Certificate for Payment Form, with itemized data typed on 8-1/2 inch x 11 inch or white paper continuation sheets.

B. Provide itemized data on continuation sheets of format, schedules, line items, and values specified on the Application and Certificate for Payment Form. The Contractor shall use the item descriptions and contract values included in schedule of values, approved and accepted by the Engineer as a basis for preparation of the Application and Certificate for Payment.

1.03 PREPARATION OF APPLICATION FOR EACH PROGRESS PAYMENT

A. Application Form:

1. Fill in required information, including that for Change Orders executed prior to date of submittal of application.

2. Fill in percent complete for each activity and dollar values to agree with respective percents.

3. Execute certification with signature of a responsible officer of Contractor.

B. Continuation Sheets:

1. Fill in total list of all scheduled component items of the Work, with item number and scheduled dollar value for each item.

2. Fill in dollar value in each column for each scheduled line item when Work has been performed or products stored. Round off values to nearest dollar, or as specified for Schedule of Values.

3. List each Change Order executed prior to date of submission, at the end of the continuation sheets. List by Change Order Number, and description, as for an original component item of the Work.

4. To receive approval for payment on component material stored on site, submit copies of the original invoices with the Application and Certificate for Payment.

5. As provided for in the Application and Certificate for Payment Form, the Contractor shall certify, for each current pay request, that all previous progress payments received from the Owner, under this Contract, have been applied by the Contractor to discharge in full, all obligations of the Contractor in connection with Work covered by prior Applications for Payment, and all materials and equipment incorporated into the Work are free and clear of all liens, claims, security interest, and encumbrances. Contractor shall attach to each Application and Certificate for Payment like affidavits by all Subcontractors.

1.04 SUBSTANTIATING DATA FOR PROGRESS PAYMENTS

A. Contractor shall submit suitable information, with a cover letter identifying:

1. Project.

2. Application number and date.

3. Detailed list of enclosures.

4. For stored products:

a. Item number and identification as shown on application.

b. Description of specific material.

B. Submit one (1) copy of data and cover letter for each copy of application.

C. The Contractor is to maintain an updated set of drawings to be used as record drawings in accordance with section 01720: Project Record Documents. As a prerequisite for monthly progress payments, the Contractor is to exhibit the updated record drawings for review by the Owner and the Engineer.

D. Each monthly application for payment shall incorporate the corresponding "monthly progress status report" and updated construction schedule, prepared in accordance with the requirements of Section 00849: Weekly Construction Progress Report.

E. As a prerequisite for payment, Contractor shall submit a duly executed letter from surety consenting to payment due and progress to date.

1.05 PREPARATION OF APPLICATION FOR FINAL PAYMENT

A. Fill in application form as specified for progress payments. Provide information as required by the General Conditions.

B. Furnish evidence of completed operations and insurance in accordance with the General Conditions.

C. Provide Contractor's Final Release of Lien (Section 00863) and other close-out submittals as required.

1.06 SUBMITTAL PROCEDURE

A. Submit Applications for Payment to the Engineer between the first (1st) and the tenth (10th) day after the end of each calendar month for which payment is requested as stipulated in the Agreement. Review the percents complete with the Engineer and resolve any conflicts or discrepancies.

B. Application for Payment can be submitted via email in a PDF format.

C. When the Engineer finds the Application and Certificate for Payment Form is properly completed and correct, he will execute the Certificate for Payment and transmit the forms to the Owner, with a copy to the Contractor.

PART 2 - PRODUCTS (NOT USED)

PART 3 - EXECUTION (NOT USED)

END OF SECTION

SECTION 01040
COORDINATION

1.01 RELATED DOCUMENTS

Drawings and general provisions of the Contract, including General and Supplementary Conditions and other Division 1 Specification Sections, apply to this Section.

1.02 SUMMARY

This Section included administrative and supervisory requirements necessary for coordinating construction operations including, but not necessarily limited to, the following:

a. General project coordination procedures

b. Conservation

c. Coordination Drawings

d. Administrative and supervisory personnel

e. Cleaning and protection

1.03 RELATED SECTIONS

The following Sections contain requirements that relate to this Section:

a. Division 1 Section 01220 "Progress Meetings/Schedule" for progress meetings, coordination meetings and pre-construction conferences

b. Division 1 Section 01340 "Shop Drawings, Working Drawings, and Samples"

1.04 JOB COORDINATION

a. Contractor shall study interrelationships of details of work described in all sections of specifications and drawings and shall plan operations well in advance of time when respective operations are to be performed and shall notify, collaborate, and cooperate with all subcontractors for work; and generally to cause work to articulate and fit as intended without unnecessary cutting, patching and without leaving unsightly details.

b. Contractor shall furnish materials, labor, equipment, tools and supervision and shall do everything necessary to complete Project as shown on Drawings and as described in Specifications.

c. Contractor shall provide for transportation, loading, unloading, storing, installation, testing, and making operable parts of Project shall be requirement of this Contract.

d. If the Base Bid is accepted, Contractor shall cooperate and coordinate with the Owner's Own Forces who will be performing work as part of the construction team. Contractor shall allow at least 48 hours for the Owner's forces to enter the jobsite each time work is required to be performed by the Owner's forces. Owner shall have right to pull forces in the event of an emergency service call.

e. Contractor shall notify Engineer promptly if and when errors or discrepancies are found in drawings or specifications.

f. Any Superintendent for General Construction shall not be changed except with written consent of Engineer.

g. Contractor shall make provisions to accommodate items scheduled for later installation.

END OF SECTION

SECTION 01220
PROGRESS MEETINGS/SCHEDULE

1.00 PROGRESS MEETINGS

a. Contractor for General Construction shall schedule progress meetings between self, other Prime Contractors (if any) and major Subcontractors. Coordinate with Owner's Representative time and place of meetings which shall then be same day and hour each week for duration of Work.

b. Contractor shall preside over meetings, record and distribute copies of minutes to other Prime Contractors (if any), to subcontractors and Owner's Representative. Distribution of minutes shall be completed within three days after each meeting.

c. Meetings shall be held weekly unless otherwise adjusted to suit Project.

2.00 PROGRESS SCHEDULE

Prior to the Initial Application for Payment, prepare and submit a proposed construction schedule. At beginning of each subsquent month, and based on information brought forth in progress meetings, Contractor for General Construction shall update bar graph to reflect current status of all phases of construction work. Revised bar graph shall indicate adjustments necessary to be made in all trades of work to bring work back on schedule. Adjustments may include, but are not necessarily limited to, increased manpower and increased daily and weekly working hours. Revised bar graph shall be distributed to Owner's Representative and all others involved in construction of this project.

END OF SECTION

SECTION 01340
SHOP DRAWINGS, WORKING DRAWINGS, AND SAMPLES

PART 1 - GENERAL

1.01 DESCRIPTION

A. Scope of Work:

1. The Contractor shall submit to the Engineer for review and approval, such Shop Drawings, Test Reports, and Product Data on materials and equipment (hereinafter in this Section called Data), and material samples (hereinafter in this Section called Samples) as are required for the proper control of work, including but not limited to those Shop Drawings, Data, and Samples for materials and equipment specified elsewhere in the Specifications and in the Drawings.

2. Within 30 calendar days after the Pre-construction conference , the Contractor shall submit to the Engineer a complete list of preliminary data on items for which Shop Drawings are to be submitted. Included in this list shall be the names of all proposed manufacturers furnishing specified items. Review of this list by the Engineer shall in no way expressed or implied relieve the Contractor from submitting complete Shop Drawings and providing materials, equipment, etc., fully in accordance with the Contract Documents. This procedure is required in order to expedite final review of Shop Drawings.

3. The Contractor is to maintain an accurate updated submittal log and will bring this log to each scheduled progress meeting with the Owner and the Engineer. This log should include the following items:

   a. Submittal description and number assigned.

   b. Date to Engineer.

   c. Date returned to Contractor (from Engineer).

   d. Status of submittal (Approved, Approved as Noted, Amend and Resubmit, and Rejected).

   e. Date of resubmittal and return (as applicable).

   f. Date material release (for fabrication).

   g. Projected date of fabrication.

h. Projected date of delivery to site.

i. Status of O&M manuals submittal.

j. Specification Section.

k. Drawings sheet number.

B. Related Requirements Described Elsewhere:

1. General Conditions: Section 00710.

2. Shop Drawing Submittal Form: Section 00864.

3. General Requirements: Section 01001.1.11

1.02 CONTRACTOR'S RESPONSIBILITY

A. It is the responsibility of the Contractor to check all drawings, data and samples prepared before submitting them to the Engineer for review. Each and every copy of the Drawings and data shall bear the Contractor's stamp showing that they have been so checked. Shop drawings submitted to the Engineer without the Contractor's stamp will be returned to the Contractor for conformance with this requirement. Shop drawings shall indicate any deviations in the submittal from requirements of the Contract Documents. If the Contractor takes exception to the specifications, the Contractor shall note the exception in the letter of transmittal to the Engineer.

B. Determine and verify:

1. Field measurements.

2. Field construction criteria

3. Catalog numbers and similar data.

4. Conformance with Specifications.

C. The Contractor shall furnish the Engineer a schedule of Shop Drawing submittals fixing the respective dates for the submission of shop and working drawings, the beginning and ending of manufacture, testing, and installation of materials, supplies, and equipment. This schedule shall indicate those that are critical to the progress schedule.

D. The Contractor shall not begin any of the work covered by a Shop Drawing, Data, or a Sample returned for correction until a revision or correction thereof has been reviewed and returned to him, by the Engineer, with approval.

E. The Contractor shall submit to the Engineer all drawings and schedules sufficiently in advance of construction requirements to provide no less than 30 calendar days for checking and appropriate action from the time the Engineer receives them.

F. All submittals shall be accompanied with a transmittal letter prepared in duplicate containing the following information:

1. Date.

2. Project Title and Number.

3. Contractor's name and address.

4. The number of each Shop Drawings, Project Data, and Sample submitted.

5. Notification of Deviations from Contract Documents.

a. The Contractor shall indicate in **bold type** at the top of the cover sheet of submittal of shop drawing if there is a deviation from the Drawings, Specifications, or referenced specifications or codes.

b. The Contractor shall also list any deviations from the Drawings, Specifications, or referenced specifications or codes and identify in green ink prominently on the applicable Shop Drawings.

6. Submittal Log Number conforming to Specification Section Number.

G. The Contractor shall submit Shop Drawing via email or other electronic file sharing application in PDF format. The Engineer/Owner will review the Shop Drawings and return to the Contractor the set of marked-up drawings with appropriate review comments.

H. The Contractor shall be responsible for and bear all costs of damages which may result from the ordering of any material or from proceeding with any part of Work prior to the completion of the review by the Engineer of the necessary Shop Drawings.

I. The Contractor shall be fully responsible for observing the need for and making any changes in the arrangement of piping, connections, wiring, manner of installation, etc., which may be required by the materials/equipment he proposes

to supply both as pertains to his own work and any work affected under other parts, headings, or divisions of the Drawings and Specifications.

J. The Contractor shall not use Shop Drawings as a means of proposing alternate items to demonstrate compliance with the Drawings and Specifications.

K. Each submittal will bear a stamp indicating that Contractor has satisfied Contractor's obligations under the Contract Documents with respect to Contractor's review and approval of that submittal as illustrated below.

(OWNER'S NAME)
(PROJECT NAME)
(PROJECT NUMBER)

SHOP DRAWING NO.:_____
SPECIFICATION SECTION:_____ DRAWING NO._____

WITH RESPECT TO THIS SHOP DRAWING OR SAMPLE, I HAVE DETERMINED AND VERIFIED ALL QUANTITIES, DIMENSIONS, SPECIFIED PERFORMANCE CRITERIA, INSTALLATION REQUIREMENTS, MATERIALS, CATALOG NUMBERS, AND SIMILAR DATA WITH RESPECT THERETO AND REVIEWED OR COORDINATED THIS SHOP DRAWING OR SAMPLE WITH OTHER SHOP DRAWINGS AND SAMPLES AND WITH THE REQUIREMENTS OF THE WORK AND THE CONTRACT DOCUMENTS.

_____ NO VARIATION FROM CONTRACT DOCUMENTS

_____ VARIATION FROM CONTRACT DOCUMENTS AS SHOWN

(CONTRACTOR'S NAME)
(CONTRACTOR'S ADDRESS)

BY:
_____DATE:_____
AUTHORIZED SIGNATURE

L. Drawings and schedules shall be checked and coordinated with the work of all trades and sub-contractors involved, before they are submitted for review by the Engineer and shall bear the Contractor's stamp of approval as evidence of such checking and coordination. Drawings or schedules submitted without this stamp of approval shall be returned to the Contractor for resubmission.

1.03 ENGINEER'S REVIEW OF SHOP DRAWINGS

A. The Engineer's review of Shop Drawings, Data, and Samples as submitted by the Contractor will be to determine if the items(s) generally conforms to the information in the Contract Documents and is compatible with the design concept. The Engineer's review and exceptions, if any, will not constitute an approval of dimensions, connections, quantities, and details of the material, equipment, device, or item shown.

B. The review of drawings and schedules will be general, and shall not be construed:

1. As permitting any departure from the Contract Documents.

2. As relieving the Contractor of responsibility for any errors, including details, dimensions, and materials.

3. As approving departures from details furnished by the Engineer, except as otherwise provided herein.

C. If the drawings or schedules as submitted describe variations and show a departure from the Contract Documents which the Engineer finds to be in the interest of the Owner and to be so minor as not to involve a change in Contract Price or contract time, the Engineer may return the reviewed drawings without noting an exception.

D. "Approved As Noted" - Contractor shall incorporate Engineer's comments into the submittal before release to manufacturer. The Contractor shall send a letter to the Engineer acknowledging the comments and their incorporation into the Shop Drawing.

E. "Amend And Resubmit" - Contractor shall resubmit the Shop Drawing to the Engineer. The resubmittal shall incorporate the Engineer's comments highlighted on the Shop Drawing.

F. "Rejected" - Contractor shall correct, revise and resubmit Shop Drawing for review by Engineer.

G. Resubmittals will be handled in the same manner as first submittals. On resubmittals the Contractor shall direct specific attention, in writing or on resubmitted Shop Drawings, to revisions other than the corrections requested by the Engineer on previous submissions. The Contractor shall make any corrections required by the Engineer.

H. If the Contractor considers any correction indicated on the drawings to constitute a change to the Drawings or Specifications, the Contractor shall give written notice thereof to the Engineer.

I. When the Shop Drawings have been completed to the satisfaction of the Engineer, the Contractor shall carry out the construction in accordance therewith and shall make no further changes therein except upon written instructions from the Engineer.

J. No partial submittals will be reviewed. Submittals not deemed complete will be stamped "Rejected" and returned to the Contractor for resubmittal. Unless otherwise specifically permitted by the Engineer, make all submittals in groups containing all associated items for:

1. Systems.

2. Processes.

3. As indicated in specific Specifications Sections.

All drawings, schematics, manufacturer's product Data, certifications, and other Shop Drawing submittals required by a system specification shall be submitted at one time as a package to facilitate interface review.

K. Only the Engineer shall utilize the color "red" in marking Shop Drawing submittals.

L. Shop drawing and submittal data shall be reviewed by the Engineer for each original submittal and first resubmittal; thereafter review time for subsequent resubmittals shall be charged to the Contractor and the Contractor shall reimburse the Owner for services rendered by the Engineer.

1.04 SHOP DRAWINGS

A. When used in the Contract Documents, the term "Shop Drawing" shall be considered to mean Contractor's plans for materials and equipment which become an integral part of the Project. Shop Drawings shall be complete and detailed and shall consist of fabrication, erection, setting and schedule drawings, manufacturer's scale drawings, and wiring and control diagrams. Catalogs cuts, catalogs, pamphlets, descriptive literature, and performance and test data shall be considered only as supportive information to required Shop Drawings as defined above. As used herein, the term "manufactured" applies to standard units usually mass-produced; and "fabricated" means items specifically assembled or made out of selected materials to meet individual design requirements.

B. Manufacturer's catalog sheets, brochures, diagrams, illustrations, and other standard descriptive data shall be clearly marked to identify pertinent materials, products, or models. Delete information which is not applicable to the Work by striking or cross-hatching.

C. Each Shop Drawing shall be submitted with an 8 1/2 inch by 11-inch cover sheet which shall include a title block for the submittal. Each Shop Drawing cover sheet shall have a blank area 3 1/2 inches high by 4 1/2 inches wide, located adjacent to the title block. The title block/cover sheet shall display the following:

1. Project Title and Number.

2. Structure name or ID.

3. Number and title of the Shop Drawing.

4. Date of Shop Drawing or revision.

5. Name of Contractor and subcontractor submitting drawing.

6. Supplier/manufacturer.

7. Separate detailer when pertinent.

8. Specification title and Section number.

9. Applicable Drawing number.

D. Data on materials and equipment shall include, without limitation, materials and equipment lists, catalog data sheets, catalog cuts, performance curves, diagrams, verification of conformance with applicable standards or codes, materials of construction, and similar descriptive material. Materials and equipment lists shall give, for each item thereon, the name and location of the supplier or manufacturer, trade name, catalog reference, size, finish, and all other pertinent Data.

E. For all mechanical and electrical equipment furnished, the Contractor shall provide a list including the equipment name, and address, and telephone number of the manufacturer's representative and service company so that service and/or spare parts can be readily obtained.

F. If drawings show variations from Contract requirements because of standard shop practice or for other reasons, the Contractor shall describe such variations in his letter of transmittal. If acceptable, proper adjustment in the Contract shall be implemented where appropriate. If the Contractor fails to describe such

variations, he shall not be relieved of the responsibility for executing the Work in accordance with the Contract, even though such drawings have been reviewed.

G. All manufacturers or equipment suppliers who propose to furnish equipment or products shall submit an installation list to the Engineer along with the required shop drawings. The installation list shall include at least five (5) installations where identical equipment has been installed and has been in operation for a period of at least 2 years unless specified otherwise in the Specification Section applicable.

1.05 WORKING DRAWINGS

A. When used in the Contract Documents, the term "Working Drawings" shall be considered to mean the Contractor's plan for temporary structures such as temporary bulkheads, support of open cut excavation, support of utilities, ground water control systems, forming and falsework for underpinning, and for such other work as may be required for construction but does not become an integral part of the Project.

B. Copies of working drawings as noted in paragraph 1.05 A. above, shall be submitted to the Engineer where required by the Contract Documents or requested by the Engineer, and shall be submitted at least 30 calendar days (unless otherwise specified by the Engineer) in advance of their being required for the Work.

C. Working Drawings shall be signed by a registered Professional Engineer, currently licensed to practice in the State of Florida, and shall convey, or be accompanied by, calculation or other sufficient information to completely explain the structure, machine, or system described and its intended manner of use. Prior to commencing such work, working drawings must have been reviewed without specific exceptions by the Engineer, which review will be for general conformance and will not relieve the Contractor in any way from his responsibility with regard to the fulfillment of the terms of the Contract. All risks to new or existing work are assumed by the Contractor; the Owner and Engineer shall have no responsibility therefor.

1.06 SAMPLES

A. The Contractor shall furnish, for the approval of the Engineer, samples required by the Contract Documents or requested by the Engineer. Samples shall be delivered to the Engineer as specified or directed. The Contractor shall prepay all shipping charges on samples. Materials or equipment for which samples are required shall not be used in the Work until approved by the Engineer.

B. Samples shall be of sufficient size and quantity to clearly illustrate:

1. Functional characteristics of the product, with integrally related parts and attachment devices.

2. Full range of color, texture, and pattern.

3. A minimum of three (3) samples of each item shall be submitted.

C. Each sample shall have a label indicating:

1. Name of Project.

2. Name of Contractor and subcontractor.

3. Material or equipment represented.

4. Place of origin.

5. Name of producer/supplier and brand (if any).

6. Location in Project.

7. Submittal and specification numbers.

(Samples of finished materials shall have additional marking that will identify them under the finished schedules.)

D. The Contractor shall prepare a transmittal letter and a description sheet for each shipment of samples. The description sheet shall contain the information required in Paragraphs 1.06B and C above. He shall enclose a copy of the letter and description sheet with the shipment and send a copy of the letter and description sheet to the Engineer. Approval of a sample shall be only for the characteristics or use named in such approval and shall not be construed to change or modify any Contract requirements.

E. Approved samples not destroyed in testing shall be sent to the Engineer or stored at the site of the Work. Approved Samples of the hardware in good condition will be marked for identification and may be used in the Work. Materials and equipment incorporated in the Work shall match the approved Samples. Samples which failed testing or were not approved will be returned to the Contractor at his expense, if so requested at time of submission.

PART 2 - PRODUCTS (NOT USED)

PART 3 - EXECUTION (NOT USED)

END OF SECTION

SECTION 01380
CONSTRUCTION PHOTOGRAPHS

PART 1 - GENERAL

1.01 DESCRIPTION OF WORK: Progress photographs shall be taken at periodic intervals, not to exceed 10 days, showing the extent and progress of the work performed as of that date. Photographs shall be taken at each location of work on the day ending period for which partial payment is requested during the development of stages and condition of work and as directed by the City. Typical roadway and pipeline work shall be photographed at different stages of construction at the direction of the City. Initial pre-construction photographs shall be taken no later than 14 calendar days after notice to proceed and prior to beginning of any construction, and shall show all views of the sites, including adjacent private property.

A. Final Photographs shall be taken in the same manner and location as specified for Progress Photographs.

B. At each specified time, take photographs of each major structure or area of work. Furnish the photographs in PDF format of each view.

C. Aerial Photographs of the site work shall be taken monthly and submitted to the City

1.02 QUALITY ASSURANCE

Camera: Use digital camera with minimum 13 Megapixel quality, or as approved by the City.

1.03 SUBMITTALS

A. Submit examples of photographer's work, similar to that required.

B. Submit photographs with pay request for work photographed.

C. Submit final binder at final closeout meeting along with digital copies.

PART 2 - PRODUCTS

2.01 PDF’s

PDF’s shall be submitted via email or USB. If the PDF’s are too large to be sent via email, and alternative method may be substituted upon prior approval by the Owner.

PART 3 - EXECUTION

3.01 TECHNIQUE

Factual presentation with correct exposure and focus for high resolution and sharpness with maximum depth-of-field and minimum distortion.

3.02 DELIVERY OF PDF's

Deliver PDF's monthly to accompany each request for progress payment. PDF's shall be provided via email to the following project team members:

1. Owner
2. Engineer
3. Contractor

END OF SECTION

SECTION 01390
AUDIOVISUAL DOCUMENTATION

PART 1 - GENERAL

The purpose of the audiovisual documentation is to provide the City with regularly documented audiovisual records of the Construction process from the existing conditions through final completion.

PRE-CONSTRUCTION VIDEO REQUIREMENTS INCLUDED

1. The Contractor shall employ a professional videographer to take a Pre-Construction video of the entire site, including the areas of adjacent properties within 100-feet of the limits of Work, and shall be made five days after issuance of notice to proceed (NTP). Special attention shall be made to show the existing paved roads, shoulders, signs, and other existing features.

2. The Contractor shall submit a quality audio-video (4K) recording documenting pre-Construction field conditions for the entire project. When the Work includes the construction of water, wastewater, reuse, or other lines in the vicinity of any street or road, the Contractor shall take digital audio-video recordings of existing conditions along both sides of the street or road. The Pre-Construction video shall be submitted to the City and accepted prior to commencing any Work or using any Contractor laydown areas.

PART 2 - PRODUCTS

1. Audio-video recording on USB Drive in media format viewable on computer.

2. Each recording section shall begin with an audio description of the City's name, Contract name, and number, Contractor's name, date, and location information such as street name, the direction of travel, viewing side, etc.

3. Information appearing on the video recording must be continuous and run simultaneously by computer-generated transparent digital information. No editing or overlaying of information at a later date will be acceptable.

4. Digital information to appear in the upper left corner shall be as follows:
    1. Name of Contractor
    2. Day, date and time
    3. Name of Project & Specification Number

5. Time must be accurate and continuously displayed on the video record.

6. Written documentation must coincide with the information on the USB drive so as to make easy retrieval of locations at a later date.

7. The video system shall have the capability to transfer individual frames of video electronically into hard copy prints or photographic negatives.

8. Audio shall be recorded at the same time as the video recording and shall have the same information as on the viewing screen. Special commentary shall be given for unusual conditions of buildings, sidewalks, and curbing, foundations, trees and shrubbery, structures, equipment, pavement, etc.

9. All USB Drives shall bear labels with the following information:

    A. USB Drive Number
    B. City's Name
    C. Date of Recording
    D. Project Name and Number
    E. Location and Standing Limit of Video

PART 3 - VIDEO VIEWS REQUIREMENT

1. Complete coverage shall include all surface features within 100-feet of the Work area to be used by the Contractor and shall be supported by the appropriate audio description made simultaneously with video coverage. Such coverage shall include, but not be limited to, all existing driveways, sidewalks, curbs, ditches, roadways, landscaping, trees, culverts, headwalls, and retaining walls, equipment, structures, pavements, manholes, vaults, handrails, etc. located within the work zone. Video coverage shall extend to the maximum height of all structures within this zone.

2. The video recorder shall take special efforts to point out and provide audio commentary on cracking, breakage, damage, and other defects in existing features.

3. All video recordings shall be done during times of good visibility. No video recording shall be done during periods of visible precipitation, or when more than 10% of the ground area is covered with standing water unless otherwise authorized by the City.

4. Prior to the commencement of audio-video recording, the Contractor shall notify the City in writing within 48-hours of the audio-video recording. The City may provide a designated representative to accompany and observe all video recording operations. Audio-video recording completed without a City Representative present will be unacceptable unless specifically authorized by the City.

5. Video Tape Log - Each videotape shall have a log of that video tape's contents. The log shall describe the various segments of coverage contained on the videotape in terms of the names of the streets or easement, coverage beginning and end, directions of coverage, video unit counter numbers, engineering stationing numbers, and the date.

PART 4 - AUDIO REQUIREMENTS

1. Accompanying the video recording of each videotape shall be a corresponding and simultaneously recorded audio recording. This audio recording, exclusively containing the commentary of the camera operator, shall assist in viewer orientation and in any needed identification, differentiation, clarification, or objective description of the features being shown in the video portion of the recording. The audio recording shall also be free from any conversations between the camera operator and any other production technicians.

PART 5 - PHOTOGRAPHS

1. A minimum of 3 views (top, upstream, and downstream) each shall generally be taken prior to backfilling pipelines or structures. Photographs shall be provided for:

    A. Utility conflicts/relocations
    B. Manholes
    C. Pump stations
    D. Boring and jacking
    E. Directional drilling pipe entrance and exit
    F. Valve installation
    G. Air release valve installation
    H. Fire hydrant assembly

2. Photo Identification

    1. Name of Project
    2. Name of Structure
    3. Orientation of View
    4. Date & Time of Exposure
    5. Film numbered identification of exposure

PART 6 - CONSTRUCTION SCHEDULE

1. Recording shall be done five days after the issuance of NTP. No construction shall begin prior to the review and approval of the tapes covering the construction area by the City. The City shall have the authority to reject all or any portion of a videotape, not conforming to specifications and order that it be redone at no additional charge. The Contractor shall reschedule unacceptable coverage within five days after being notified. The City shall designate those areas, if any, to be omitted from or added to the audiovisual coverage. All tapes and written records shall become the property of the Owner.

PART 7 - EXECUTION

1. Coverage

   The recording shall contain coverage of all surface features located within the construction's zone of influence. The surface features within the construction's zone of influence shall include, but not be limited to, all roadways, pavement, detention ponds, walls, curbs, driveways, sidewalks, culverts, headwalls, retaining walls, buildings, landscaping, trees, shrubbery, and fences. Of particular concern shall be the existence or non-existence of any faults, fractures, or defects. Taped coverage shall be limited to one side of the street at any one time and shall include all surface conditions located within the zone of influence supported by the appropriate audio description. Panning, zoom-in, and zoom-out rates shall be sufficiently controlled to maintain a clear view of the object.

2. Coverage Rates

   The average rate of travel during a particular segment of coverage (e.g. coverage of one side of a street) shall be directly proportional to the number, size, and value of the surface features within the construction area's zone of influence.

3. Submittals

   Three copies of the audio / visual USB Drive shall be submitted to the City prior to starting construction.

SECTION 01500
CONSTRUCTION FACILITIES AND TEMPORARY CONTROLS

PART 1 - GENERAL

1.01 GENERAL

Temporary work, facilities, and services and temporary services needed from permanent facilities required for Project Work, from start of work to Substantial Completion of Project, including facilities and services needed for testing of installations and equipment, shall be arranged for, furnished and paid for by Contractor, and as defined herein.

1.02 IMPLEMENTATION AND TERMINATION SCHEDULE

Within 15 days of the date established for commencement of the Work, submit a schedule indicating implementation and termination of each temporary utility.

1.03 QUALITY ASSURANCE

A. Regulations: Comply with industry standards and applicable laws and regulations of authorities having jurisdiction including, but not limited to, the following:

1. Building code requirements.
2. Health and safety regulations.
3. Utility company regulations.
4. Police, fire department and rescue squad rules.
5. Environmental protection regulations.
6. Stormwater Management Regulation

B. Standards: Comply with NFPA 241 "Standard for Safeguarding Construction, Alterations and Demolition Operations," ANSI A10 Series standards for "Safety Requirements for Construction and Demolition," and NECA Electrical Design Library "Temporary Electrical Facilities." Electrical services must comply with NEMA, NECA, and UL standards and regulations for temporary electric service. Install service in compliance with NFPA 70 "National Electric Code."

C. Inspections: Arrange for authorities having jurisdiction to inspect and test each temporary utility before use. Obtain required certifications and permits.

1.04 DELIVERY, STORAGE AND HANDLING

Each Contractor and Subcontractor shall provide adequate storage facilities for protection of materials and equipment they furnish. Materials and equipment shall be stored so as to ensure preservation of their quality and fitness for Work. Perishable items and items affected by weather, rain, wind, dust, heat or cold shall be stored in temporary waterproof sheds or trailers with raised floors, and heated if necessary. Other materials and equipment shall be stored on wooden platforms and not on ground.

1.05 PROJECT CONDITIONS – NOT APPLICABLE

PART 2 - PRODUCTS – NOT APPLICABLE

PART 3 - EXECUTION

3.01 TEMPORARY UTILITY INSTALLATION

A. General: Engage the appropriate local utility company to install temporary service or connect to existing service. Where company provides only part of the service, provide the remainder with matching, compatible materials and equipment. Comply with company recommendations

1. Arrange with company and existing users for a time when service can be interrupted, if necessary, to make connections for temporary services.

2. Provide adequate capacity at each stage of construction. Prior to temporary utility availability provide trucked-in services.

3. Obtain easements to bring temporary utilities to the site where the Owner's easements cannot be used for that purpose.

B. Use Charges: Cost or use charges for temporary facilities are not chargeable to the Owner or Engineer. Neither the Owner nor Engineer will accept cost or use charges as a basis of claims for Change Orders.

3.02 TOILET FACILITIES

A. Contractor shall provide and maintain suitable temporary toilet facilities for workers during construction. Toilet facilities shall conform to local ordinance having jurisdiction. Location of toilet facilities shall be submitted to the City for approval.

B. Contractor may install, with written consent from the Owner, temporary fixtures with connections to water and drains systems. Contractor shall remove prior to close out of project.

3.03 WATER

A. Contractor shall install, move and remove temporary water service as required for construction operations as approved and directed by Owner.

B. Contractor for General Construction shall pay for water consumed on Project.

3.04 TEMPORARY HEAT AND ENCLOSURES

A. All temporary ventilation, dehumidification and/or heat shall be provided and paid for by Contractor. Temporary conditioning shall be provided as follows:

1. After building is enclosed, in cold weather maintain temperature of not less than 50°F during working hours and temperature of at least 40°F at other times. Provide mechanical ventilation in areas wet or damp, as required to dry areas to continue work on schedule.

2. During placing, setting and curing of concrete; not less than 40°F.

3. During laying of masonry; not less than 40°F.

3.06 ELECTRIC

A. Contractor shall arrange with local Electric Utility Company to provide adequate electric service for temporary power and light as will be required.

B. Contractor shall provide, install, and maintain temporary light and power systems from Electric Utility service to provide following:

1. Lighting for general illumination shall conform to OSHA.

2. Lighting for execution of work and for finish work shall be of light intensity required to properly perform Work. In general, minimum light levels shall be 15 fc for rough work and 50 fc for finish work.

3. Temporary wiring that conforms to OSHA.

4. Removal of temporary wiring when no longer required.

5. Temporary power poles necessary to provide temporary electrical service.

C. Contractors and Subcontractors shall provide their own temporary electric service, including wiring and lights in field office and sheds, and for any three phase service or single phase service exceeding 3 H.P.

D. Each Contractor and Subcontractor shall furnish their own extension cords.

E. Payment for electric service, electricity used, and electricity consumed shall be by Contractor.

3.07 ACCESS TO CONSTRUCTION OPERATIONS

A. Contractor shall put forth every reasonable effort to minimize disruption of adjacent properties. Access by property owners to their property will be maintained at all times.

B. Any damage to existing roadways shall be repaired by Contractor.

3.08 SUPPORT FACILITIES INSTALLATION

A. Locate storage sheds and other temporary construction and support facilities for easy access.

B. Temporary paving: Maintain roads and paving to support the construction loading adequately and to withstand exposure to traffic during the construction period. Review proposed modifications to permanent paving with the Owner’s Representative.

3.09 DEWATERING (where/if required)

A. Contractor shall be responsible for obtaining any necessary dewatering permits.

3.10 PROJECT SIGN

A. Contractor for General Construction shall provide one painted sign minimum 4' x 4', 3/4" thick exterior grade plywood, with name of Project and names of Owner, Engineer, and Contractor, and any other names or Contractors requested by Owner's Representative. Contractor shall have no other signs visible on this site without specific permission of the Owner.

B. Provide shop drawing showing layout of sign to Owner's Representative. Colors shall be as selected.

C. Sign shall be erected with 4" x 4" treated wood posts set firmly in ground where indicated by Owner's Representative.

D. Sign shall be maintained until completion of Project.

3.11 COLLECTION AND DISPOSAL OF WASTE

Collect waste from construction areadaily. Comply with requirements of NFPA 241 for removal of combustible waste material and debris. Enforce requirements strictly. Do not hold materials more than three days when temperature is expected to rise above 80°F. Handle hazardous, dangerous or unsanitary waste materials separately form other waste by containerizing properly. Dispose of material in lawful manner.

3.12 OPERATION, TERMINATION AND REMOVAL

A. Supervision: Enforce strict discipline in use of temporary facilities. Limit availability of temporary facilities to essential and intended uses to minimize waste and abuse.

B. Maintenance: Maintain facilities in good operating condition until removal. Protect from damage by freezing temperatures and similar elements.

C. Termination and Removal: Unless the Owner’s Representative requests that it be maintain longer, remove each temporary facility when the need has ended or no later than Substantial completion.

1. Materials and facilities that constitute temporary facilities are the Contractor’s property. The Owner reserves the right to take possession of project identification signs.

2. Remove temporary paving not intended for or acceptable for integration into permanent paving. Where the area is intended for landscape development, remove soil and aggregate fill that do not comply with requirements for fill or subsoil in the area. Remove materials contaminated with road oil, asphalt and other petrochemical compounds, and other substances that might impair growth of plant materials or laws. Repair or replace street paving, curbs, and sidewalks at the entrances, as required by the governing authority.

END OF SECTION

SECTION 01567
TEMPORARY BARRIERS AND ENCLOSURES

PART 1 - GENERAL

1.01 SUMMARY

This section includes:

A. Temporary barricades for protection of work place during construction.

B. Barricades shall be perimeter type encircling or containing various construction (excavated) areas.

PART 2 - PRODUCTS

2.01 MATERIALS

A. General: Provide new materials. Undamaged, previously used materials in serviceable condition may be used if approved by Engineer. Provide materials suitable for use intended.

B. Chain-Link Fencing: Minimum 2-inch (50-mm), 0.148-inch- (3.76-mm-) thick, galvanized steel, chain-link fabric fencing; minimum 6 feet (1.8 m) high with galvanized steel pipe posts; minimum 2-3/8-inch- (60-mm-) OD line posts and 2-7/8-inch- (73-mm-) OD corner and pull posts[, with 1-5/8-inch- (42-mm-) OD top rails] [, with galvanized barbed-wire top strand].

C. Portable Chain-Link Fencing: Minimum 2-inch (50-mm) 9-gage, galvanized steel, chain-link fabric fencing; minimum 6 feet (1.8 m) high with galvanized steel pipe posts; minimum 2-3/8-inch- (60-mm-) OD line posts and 2-7/8-inch- (73-mm-) OD corner and pull posts, with 1-5/8-inch- (42-mm-) OD top and bottom rails. Provide [concrete] [galvanized steel] bases for supporting posts.

D. Wood Enclosure Fence: Plywood, [6 feet (1.8 m)] [8 feet (2.4 m)] high, framed with four 2-by-4-inch (50-by-100-mm) rails, with preservative-treated wood posts spaced not more than 8 feet (2.4 m) apart.

E. Night Warning Lights

1. Battery operated, neon type, flashing lights, with 360 degree visibility and amber in color.

2. Night warning lights shall be securely bolted or locked in upright position to barricade.

3. Maximum spacing of night warning lights shall be 30'-0" on center for work areas.

4. Other barricaded hazardous areas shall have minimum of two (2) each night warning lights, or more, if so directed by Owner or Construction Manager.

PART 3 - EXECUTION

3.01 PREPARATION

A. Furnish, place, and maintain barricades and night danger lights as herein specified and as directed by Owner's Representative.

B. Call and notify Owner at least 72 hours prior to placing barricades or starting any work whereby traffic will be impeded or hindered, especially fire trucks and police vehicles.

C. Obtain prior approval of Owner when work operations will result in street closures. When streets are approved for closure, establish and mark safe detours for vehicles to follow.

D. Furnish Owner's Representative with name, address and telephone number of two employees who will be responsible for warning light and barricade maintenance.

3.02 SECURITY AND PROTECTION FACILITIES INSTALLATION

A. Environmental Protection: Provide protection, operate temporary facilities, and conduct construction in ways and by methods that comply with environmental regulations and that minimize possible air, waterway, and subsoil contamination or pollution or other undesirable effects. Avoid using tools and equipment that produce harmful noise. Restrict use of noisemaking tools and equipment to hours that will minimize complaints from persons or firms near Project site.

B. Barricades, Warning Signs, and Lights: Comply with standards and code requirements for erecting structurally adequate barricades. Paint with appropriate colors, graphics, and warning signs to inform personnel and public of possible hazard. Where appropriate and needed, provide lighting, including flashing red or amber lights. For safety barriers, sidewalk bridges, and similar uses, provide minimum 5/8-inch- (16 mm) thick exterior plywood.

C. Temporary Fire Protection: Install and maintain temporary fire-protection facilities of types needed to protect against reasonably predictable and controllable fire losses.

1. Provide fire extinguishers, installed on walls on mounting brackets, visible and accessible from space being served, with sign mounted above.

   a. Field Offices: Class A stored-pressure water-type extinguishers.

   b. Other Locations: Class ABC dry-chemical extinguishers or a combination of extinguishers of NFPA-recommended classes for exposures.

2. Store combustible materials in containers in fire-safe locations.

3. Maintain unobstructed access to fire extinguishers, fire hydrants, temporary fire-protection facilities, and other access routes for firefighting. Prohibit smoking in hazardous fire-exposure areas.

4. Supervise welding operations, combustion-type temporary heating units, and similar sources of fire ignition.

5. Develop and supervise an overall fire-prevention and first-aid fire-protection program for personnel at Project site. Review needs with local fire department and establish procedures to be followed. Instruct personnel in methods and procedures. Post warnings and information.

3.02 OPERATION AND REMOVAL

A. Turn on night warning lights and keep them burning from sunset to sunrise each day including Saturdays, Sunday, and holidays, and also during days when visibility is poor.

B. Maintain barricades in solid upright position with lighting system properly maintained.

C. Remove barricades at completion of work or when directed by Owner's Representative.

END OF SECTION

SECTION 01600
MATERIAL AND EQUIPMENT

PART 1 - GENERAL

1.01 RELATED REQUIREMENTS

A. General provisions of Contract.

B. Summary of Work - Section 01001.

C. Submittal requirements - Section 01300.

D. Operating and maintenance data - Section 01700.

E. Record documents of materials - Section 01720.

1.02 SECTION INCLUDES

A. Administrative and procedural requirements governing the Contractor's selection of products for use in the Project.

B. Administrative and procedural requirements for handling requests for substitutions.

C. Requirements for Product List submittal.

1.03 QUALITY ASSURANCE

A. To the fullest extent possible, provide products of the same kind, from a single source.

B. When the Contractor is given the option of selecting between two or more products for use on the Project, the product selected shall be compatible with products previously selected, even if previously selected products were also options.

C. Except for required labels and operating data, do not attach or imprint manufacturer's or producer's nameplates or trademarks on exposed surfaces of products which will be exposed to view in occupied spaces or on the exterior.

1. Locate required product labels and stamps on a concealed surface or, where required for observation after installation, on an accessible surface that is not conspicuous.
2. Provide a permanent nameplate on each item of service-connected or power-operated equipment. Locate on an easily accessible surface which is

inconspicuous in occupied spaces. The nameplate shall contain the following information and other essential operating data:

a. Name of product and manufacturer.
b. Model and serial number.
c. Capacity.
d. Speed.
e. Ratings.

D. The Contractor shall be responsible for the constructability and performance of any substitute materials requested by the Contractor and approved by the City. The Contractor shall ensure that any approved substitute materials will perform to the intent of the specified materials, at no additional cost or time to the City, including the costs of installation, testing, repair, or correction of the utility system due to the performance or lack thereof of the substitute material.

1.04 PRODUCT DELIVERY, STORAGE, AND HANDLING

A. Deliver, store and handle products in accordance with the manufacturer's recommendations, using means and methods that will prevent damage, deterioration and loss, including theft.

1. Schedule delivery to minimize long-term storage at the site and to prevent overcrowding of construction spaces.
2. Coordinate delivery with installation time to ensure minimum holding time for items that are flammable, hazardous, easily damaged, or sensitive to deterioration, theft and other losses.

B. Deliver products to the site in the manufacturer's original sealed container or other packaging system, complete with labels and instructions for handling, storing, unpacking, protecting and installing.

C. Inspect products upon delivery to ensure compliance with the Contract Documents, and to ensure that products are undamaged and properly protected.

D. Store products at the site in a manner that will facilitate inspection and measurement of quantity or counting of units.

E. Store heavy materials away from the project structure and existing structures in a manner that will not endanger the supporting construction.

F. Store products subject to damage by the elements above ground, under cover in a weather tight enclosure, with ventilation adequate to prevent condensation. Maintain temperature and humidity within range required by manufacturer's instructions.

PART 2 - PRODUCTS

2.01 PRODUCT SELECTION

A. Provide products that comply with the Contract Documents, that are undamaged and, unless otherwise indicated, unused at the time of installation.

1. Provide products complete with all accessories, trim, finish, safety guards and other devices and details needed for a complete installation and for the intended use and effect.
2. Where available, provide standard products, which meet the specified requirements, of types that have been produced and used successfully in similar situations on other projects.

B. Product selection is governed by the Contract Documents and governing regulations, not by previous project experience. Procedures governing product selection include the following:

1. Where only a single source product or manufacturer is named, provide the product indicated or submit a request for substitution for any product or manufacturer not named.
2. Where two or more sources of products or manufacturers are named, provide one of the products indicated or submit a request for substitution for any product or manufacturer not named.
3. Where Specifications describe a product or assembly, listing exact characteristics required, without use of a brand or trade name, provide any product or assembly that provides the characteristics and otherwise complies with Contract requirements.
4. Where Specifications require compliance with performance requirements, provide any products that comply with the specified requirements.
5. Where the Specifications only require compliance with an imposed code, standard or regulation, select a product that complies with the standards, codes or regulations specified.
6. Where Specifications require matching an established Sample, the City's decision will be final on whether a proposed product matches satisfactorily.
7. Where specified product requirements are indicated to be selected from manufacturer's standard colors, patterns, textures, or similar condition, select a product and manufacturer that complies with other specified requirements. The City will select the color, pattern and texture from the product line selected.
8. The description of specific qualities takes precedence over specified reference standards. The description of specific qualities and specified reference standards together take precedence over the named products of designated manufacturers.

C. Source Manufacturers:

1. Primary source products and manufacturers named in a Specification section are listed as standards of quality to which other products will be compared.
2. Source manufacturers named in a Specification section are those manufacturers considered capable of manufacturing products conforming to the specified requirements.
3. The naming of source manufacturers in addition to the primary source product and manufacturer specified does not imply acceptance or approval of just any standard product of that manufacturer. The standard products offered by an additional named source manufacturers shall be equal to or superior in every respect to the specified or primary named source product and shall meet or exceed specification requirements.

PART 3 - EXECUTION

3.01 MANUFACTURER'S INSTALLATION INSTRUCTIONS

A. When Contract Documents require installation of work to comply with manufacturer's printed instructions, obtain and distribute copies of such instructions to all parties involved in the installation, including copies to the City in accordance with Section 01300.

B. Handle, install, connect, condition, clean, and adjust products in accordance with such instructions and in conformance with specified requirements. Should job conditions or specified requirements conflict with manufacturer's instructions, notify the City for additional instructions.

C. Do not omit preparatory steps or installation procedures unless specifically modified or exempted by Contract Documents.

D. Do not proceed with work without clear instructions.

END OF SECTION

SECTION 01700
CONTRACT CLOSEOUT

PART 1 - GENERAL

1.01 SUBMITTALS

A. All facilities to be owned or maintained by the City shall be located on City property, within City rights-of-way or in an easement dedicated to the City for the uses intended. Proof of satisfactory compliance with governing authorities, maintenance bonds, itemized construction costs, bills of sale, and record drawings shall be furnished to the City before final payment is made.

B. Operating Manuals Data:

1. The Contractor shall furnish to the City required copies of all maintenance manuals, instruction books, parts lists, and installation drawings bound in ringed binders for equipment furnished under this contract. It shall be the Contractor's responsibility to satisfy the Owner's requirements regarding such data. Manuals, parts lists, etc. shall be presented to Owner at time of final inspection unless specifically requested earlier. All submittals shall be in a binder and neatly indexed and tabbed.
2. PDF: The manuals shall be submitted as a PDF with a cover sheet that includes the name and location of the project, date of completion, Engineer name and contractor's name, address and phone number.
3. Index: The Contractor shall furnish an index in alphabetical or numerical order. Each major division shall list the equipment in alphabetical or numerical order. Listed under each of these major divisions shall be all items specified on the drawings as furnished with major items listed. These secondary items shall also be listed in alphabetical or numerical order. To the right of each of these equipment designations shall be the section number under which the information can be found.
4. Sections: Behind the index, provide numbered sections beginning with one thru the number required for each type of equipment. In the appropriate section, include all shop drawings, shop-cuts, parts manuals, installation manuals and operation manuals associated with each item furnished. Only one section will be required for each different material provided. The index designation shall refer to the section number behind which the information on the equipment can be found.

C. For utility systems being dedicated to or systems where the design and construction is paid for by the City, a two (2) year maintenance bond, or a Letter of Credit or similar instrument satisfactory to the County, equal to ten percent (10%) of the final utility construction costs shall be posted before City of Ocoee will recommend the facilities be accepted by the City Commission.

D. Release of Lien Statement:

1. The CONTRACTOR shall submit with his request for final payment sworn statements on the Owner's form from himself and each subcontractor, Material or Labor Supplier who has filed a "Notice to Owner" that all work has been completed and that all bills for labor, materials, and subcontractor's work on the project have been paid for in full.

E. Record Drawings:

1. The Record Drawing must follow all of the requirements in the City of Ocoee Engineering Standards Manual Section 3.01.05. It is required that all pipe installations be field surveyed and record drawings be prepared from the survey data. The record drawings shall be signed and sealed by a State of Florida registered professional land surveyor who will be responsible for the accuracy of all dimensions and elevations in accordance with the "Minimum Technical Standards." Record drawings are required prior to final inspection of the project.
2. A PDF complete set of record drawings must be received by the City seven (7) full working days prior to final inspection. The record drawings will be compared to the approved construction plans and shall be subject to field verification before final inspection of the project.
3. Residential project dimensions are to be referenced from a permanent and easily recoverable physical monument (i.e., fire hydrant, property corner, street intersection, center line of road, etc.). Commercial projects shall be referenced from buildings and other pertinent structures.
4. At least one copy of the project CAD file showing all improvements, drawn in State Plane Coordinates shall be provided to the City in an acceptable electronic form after final inspection and before final acceptance of the Work by the City.

F. Final Inspection:

1. Final inspection will be held upon completion of the project. The Contractor shall notify the Owner, upon completion, to arrange an inspection tour of the completed project.
2. The Contractor and the Owner's representatives shall be present for the inspection.

END OF SECTION

SECTION 01720
PROJECT RECORD DOCUMENTS

PART 1 - GENERAL

1.01 DESCRIPTION

A. Scope of Work: Maintain at the site for the Owner one (l) record copy of:

1. Drawings.
2. Specifications.
3. Addenda.
4. Change Orders and other modifications of the Contract.
5. Engineer's Field Orders or written instructions.
6. Approved Shop Drawings, Working Drawings and Samples.
7. Field Test records.
8. Construction photographs.

B. Related Requirements Described Elsewhere:

1. Shop Drawings, Working Drawings and Samples: Section 01340.

1.02 MAINTENANCE OF DOCUMENTS AND SAMPLES

A. Store documents and samples in Contractor's field office apart from documents used for construction.

1. Provide files and racks for storage of documents.
2. Provide locked cabinet or secure storage space for storage of samples.

B. File documents and samples in accordance with CSI format with section numbers as provided herein.

C. Maintain documents in a clean, dry, legible, condition and in good order. Do not use record documents for construction purposes.

D. Make documents and samples available at all times for inspection by the Engineer or the Owner.

E. As a prerequisite for monthly Progress payments, the Contractor is to exhibit the currently updated "Record Documents" for review by the Engineer and Owner. Payment may be withheld if record documents are not satisfactorily maintained.

1.03 MARKING DEVICES

A. Provide felt tip marking pens for recording information in the color code designated by the Engineer.

1.04 RECORDING

A. Label each document "PROJECT RECORD" with a rubber stamp having one (1) inch high letters.

B. Record information concurrently with construction progress. Do not conceal any work until required information is recorded.

C. Drawings: Legibly and clearly mark, to scale, each drawing to record actual construction:

1. All underground piping with elevations and dimensions. Changes to piping location. Horizontal and vertical locations of underground utilities and appurtenances, referenced to permanent surface improvements. Actual installed pipe material, class, etc.

2. Location of internal utilities and appurtenances concealed in the construction, referenced to visible and accessible features of the structure.

3. Field changes of dimension and detail.

4. Changes made by Field Order or by Change Order.

5. Details not on original Contract Drawings.

6. Equipment and piping relocations.

D. Specifications and Addenda: Legibly mark each section to record:

1. Manufacturer, trade name, catalog number of Supplier of each product and item of equipment actually installed.

2. Changes made by Field Order or by Change Order.

E. Shop Drawings (after final review and approval): Provide six (6) sets of record shop drawings within the Operation and Maintenance Manual, for each process equipment, piping, and instrumentation system (see Section 01730: Operating and Maintenance Data).

1.05 SUBMITTAL

A. At Contract closeout, deliver Record Documents to the Engineer for the Owner. All written documents shall be converted to a digital format that is clearly legible.

B. Accompany submittal with transmittal letter in duplicate, containing:

1. Date.

2. Project title and number.

3. Contractor's name and address.

4. Title and number of each Record Document.

5. Signature of Contractor or his authorized representative.

PART 2 - PRODUCTS (NOT USED)

PART 3 - EXECUTION (NOT USED

END OF SECTION

SECTION 01730
OPERATING AND MAINTENANCE DATA

PART 1 - GENERAL

1.01 DESCRIPTION

A. Scope of Work:

1. Compile product data and related information appropriate for Owner's operation and maintenance of products furnished under Contract.

   a. Prepare operating and maintenance data as specified in this Section and as referenced in other pertinent sections of Specifications.

2. Instruct Owner's personnel in maintenance of products and in operation of equipment and systems.

B. Related Requirements Described Elsewhere:

1. Contract Closeout: Section 01001

2. Project Record Documents: Section 01720

1.02 QUALITY ASSURANCE

A. Preparation of data shall be done by personnel who are:

1. Trained and experienced in maintenance and operation of described products.

2. Familiar with requirements of this Section.

3. Skilled as technical writer to the extent required to communicate essential data.

4. Skilled as draftsman competent to prepare required drawings.

1.03 FORM OF SUBMITTALS

A. Prepare data in form of an instructional manual for use by Owner's personnel.

B. Format:

1. Size: 8 1/2 inches by 11 inches.

2. Paper: 20 pound minimum, white, for typed pages.

3. Text: Manufacturer's printed data, or neatly typed.

4. Drawings:

    a. Provide reinforced punched binder tab, bind in with text.

    b. Reduce larger drawings and fold to size of text pages but not larger than 14 inches by 17 inches.

5. Provide fly-leaf for each separate product, or each piece of operating equipment.

    a. Provide typed description of projects and major component parts of equipment.

    b. Provide identified tabs.

6. Cover: Identify each volume with typed or printed title "OPERATING AND MAINTENANCE MANUAL". List:

    a. Title of Project.

    b. Identity of separate structure as applicable.

    c. Identity of general subject matter covered in the manual.

    d. Identity of consulting engineer for the project.

    e. Identity of general contractor for the project.

C. Binders:

1. Commercial quality , three D-ring type binders with durable and cleanable white plastic covers. Binders shall be presentation type with clear vinyl covers on front, back and spine. Binders shall include two (2) sheet lifters and two (2) horizontal inside pockets.

2. Maximum D-ring width: 2 inches.

3. When multiple binders are used, correlate the data into related consistent groupings.

1.04 CONTENT OF MANUAL

A. Each volume of the operation and maintenance manual shall include:

1. A neatly typewritten table of contents for each volume, arranged in systematic order by division, as listed within the product specifications.

2. Contractor, name of responsible principal, address and telephone number.

3. A list of each project required to be included, indexed to content of the volume.

4. List, with each project, name, address and telephone number of:

a. Subcontractor, manufacturer and installer name, addresses and telephone numbers.

b. A list of each product required to be included, indexed to content of the volume.

c. Identify area of responsibility of each product.

d. Local source of supply for parts and replacement equipment including name, address and telephone number.

5. Identify each product by product name and other identifying symbols as set forth in Contract Documents.

B. Product Design

1. Provide hydraulic and engineering design criteria for each product as it pertains to a particular unit process.

2. Provide a general description of each normal product operation as it pertains to a particular unit process.

C. Product Data:

1. Include only those sheets which are pertinent to the specific product. Hydraulic and engineering design criteria, information and procedures required for normal control, process control and performance evaluations, listing of spare parts required, maintenance and repair instructions, safety and personnel requirements and a "trouble shooting" problem guide shall be included in the manual. References to related products, manufacturer

and equipment histories, product catalogs, etc. shall not be included within the content of the operation and maintenance manual.

2. Annotate each sheet to:

   a. Clearly identify specific product or part installed.

   b. Clearly identify data applicable to installation.

   c. Delete references to inapplicable information.

3. Operation and maintenance information as herein specified.

4. Record shop drawings as submitted and approved with all corrections made for each product.

D. Drawings:

1. Supplement product data with drawings as necessary to clearly illustrate:

   a. Relations of component parts of equipment and systems.

   b. Product assembly and disassembly for maintenance and repair procedures.

   c. Control and flow diagrams.

   d. Representation of manufacturer's recommended spare parts.

2. Coordinate drawings with information in Project Record Documents to assure correct illustration of completed installation.

3. Do not use Project Record Documents as maintenance drawings.

E. Written test, as required to supplement product data for the particular installation:

1. Organize in consistent format under separate headings for different procedures.

2. Provide logical sequence of instruction of each procedure.

F. Copy of each warranty, bond and service contract issued.

1. Provide information sheet for Owner's personnel, give:

a. Proper step-by-step procedures in the event of product failure.

b. Safety instructions for plant personnel in handling of failed equipment.

c. Instances which might affect validity of warranties or bonds.

1.05 MANUAL FOR MATERIALS AND FINISHES – NOT APPLICABLE

1.06 MANUAL FOR EQUIPMENT AND SYSTEMS - NOT APPLICABLE

1.07 SUBMITTAL SCHEDULE

A. Submit two (2) copies of preliminary draft of proposed formats and outlines of contents of Operation and Maintenance Manuals within 15 days after Notice to Proceed.

B. Submit two copies of completed data in preliminary form no later than 30 days following Engineer's review of the last shop drawing of a product and/or other submittal specified under Section 01340: Shop Drawings, Working Drawings and Samples, but no later than delivery of equipment. One (1) copy will be returned with comments to be incorporated into the final copies and the other copy will be retained on-site for use in any early training.

C. Submit six (6) copies of approved manual in final form directly to the Engineer within 10 days after the reviewed copy or last item of the reviewed copy is returned.

D. Provide six (6) copies of addenda to the operation and maintenance manuals as applicable and certificates as specified within 30 days after final inspection.

1.08 INSTRUCTION OF OWNER'S PERSONNEL

A. Prior to demonstration test, fully instruct Owner's designated operating and maintenance personnel in operation, adjustment and maintenance of products, equipment and systems.

B. Operating and maintenance manual shall constitute the basis of instruction. Review contents of manual with Owner's operating and maintenance personnel in full detail to explain all aspects of operations and maintenance.

C. Instructors shall be fully qualified personnel as outlined within the individual equipment specifications. If no specific training specifications are listed with the equipment, the Contractor shall provide the instruction with qualified Contractor personnel.

D. The Contractor shall provide a list to the Owner indicating the date, time and instructors that will be present for all training sessions.

E. The instructors shall provide for and prepare lesson scopes and handouts for up to five individuals designated by the Owner that outline the items to be covered. Separate sessions for operation and maintenance instruction shall be provided consecutively. Handouts shall be submitted to the Owner with at least one week's notice prior to the training sessions.

F. All instruction sessions shall be video taped with portable video recording cameras and tapes supplied by the Contractor. Video taping shall be made by the Contractor under the direction of the Owner using VHS compatible video taping equipment.

PART 2 - PRODUCTS (NOT USED)

PART 3 - EXECUTION (NOT USED)

END OF SECTION

SECTION 01800
MISCELLANEOUS WORK AND CLEANUP

PART 1 - GENERAL

1.01 DESCRIPTION

A. Scope of Work:

1. This Section includes operations which cannot be specified in detail as separate items but can be sufficiently described as to the kind and extent to work involved. The Contractor shall furnish all labor, materials, equipment and incidentals to complete the work under this Section.

2. The work of this Section includes, but is not limited to:

   a. Restoring of fences.

   b. Cleaning up.

   c. Incidental work.

PART 2 - PRODUCTS

2.01 MATERIALS

Materials required for this Section shall be of the same quality as materials that are to be restored. Where possible, the Contractor shall reuse existing materials that are removed and then replaced.

PART 3 - EXECUTION

3.01 RESTORING OF FENCES

The Contractor shall remove, store and replace existing fences during construction. Only the sections shown on the plans or directed by the Engineer shall be removed. If any section of fence is damaged due to the Contractor's negligence, it shall be replaced with fencing equal to or better than that damaged, and the work shall be satisfactory to the Engineer.

3.02 CLEAN UP

The Contractor shall remove all construction material, equipment and other debris remaining on the job as the result of construction operations and shall render the site of the work in a neat and orderly condition. All suitable excess excavated material shall remain on site.

3.03 INCIDENTAL WORK

Do all incidental work not otherwise specified, but obviously necessary for the proper completion of the contract as specified and as shown on the Drawings.

END OF SECTION

SECTION 01450

QUALITY CONTROL

PART 1 GENERAL

1.01 Section Includes

Quality control, quality assurance

1.02 Quality Control

A. It is the CONTRACTOR'S responsibility to perform all work to a degree and in a manner that satisfies and complies with the Project requirements. In order to fulfill this responsibility, the CONTRACTOR is required to have an approved Quality Control Program, including testing, as part of his Contract work in accordance with the Contract Documents and to submit details of his Program to the ENGINEER for review and approval prior to commencing any construction operations. The submittal shall include detailed information on locations and number of all tests, etc., that will be necessary for the CONTRACTOR to make his own determination that the work is being performed in compliance with the Project requirements.

B. As part of the CONTRACTOR'S Quality Control Program included as part of his work, the CONTRACTOR shall coordinate with the soils testing laboratory employed by the OWNER to perform testing services outlined in these Contract Documents.

C. The CONTRACTOR'S Quality Control Program shall include, but not be limited to, the following in addition to the type and frequency of tests as required by the technical specifications:

1. Piping and structural excavation, bedding and backfill materials and density quality control testing.

2. Determination of compaction effort needed for compliance with the density requirements.

3. Portland cement concrete and asphalt paving quality control testing including design mix review, materials, field slump and air content, and field and lab cured strength samples and testing

D. In addition to Quality Control Testing, the CONTRACTOR shall be responsible for required testing or approvals for any work (or any part thereof) if laws or regulations of any public body having jurisdiction specifically require testing, inspections or approval. The CONTRACTOR shall pay all costs in connection

therewith and shall furnish the ENGINEER the required certificates of inspection, testing or approval. The CONTRACTOR shall also be responsible for and shall pay all costs in connection with any inspection or testing required in connection with OWNER or ENGINEER acceptance of a supplier of materials or equipment proposed to be incorporated into the work.

E. Testing laboratories, whether provided by the OWNER or the CONTRACTOR, shall promptly notify the ENGINEER and the CONTRACTOR of irregularities or deficiencies of work which are observed during performance of services. Laboratories shall submit two (2) copies of all reports directly to the ENGINEER and two (2) copies to the CONTRACTOR.

1.03 Quality Assurance

A. In addition to the services provided by the laboratory paid for by the OWNER, the CONTRACTOR as a part of his work, at his sole discretion, may employ an additional independent soils laboratory as part of OWNER'S Quality Assurance Program to verify that the work meets the requirements of the Contract Documents. The OWNER furnished Quality Assurance testing will include the type and frequency of tests as required by the technical specifications. The OWNER reserves the right to have additional tests made beyond those specified in the Contract Documents. The CONTRACTOR shall cooperate with the OWNER and make the work and samples available for OWNER testing at no additional cost in case the OWNER chooses to have additional OWNER furnished testing performed. It is the sole responsibility of the CONTRACTOR to see that his work meets all provisions of the Contract Documents.

B. The CONTRACTOR shall cooperate with the soils laboratory personnel and provide access to the work to be tested. The CONTRACTOR shall notify the ENGINEER and OWNER’S testing laboratory sufficiently in advance of operations to allow scheduling of tests. The CONTRACTOR shall furnish casual labor and facilities to obtain and handle samples at the site and to store and cure test samples as required.

1.04 Testing of Materials

A. Unless otherwise specified, all materials shall be sampled and tested in accordance with the latest published standard methods of ASTM in effect at the time bids are received. If no ASTM Standards apply, applicable standard methods of the Federal Government or of other recognized agencies shall be used.

B. Test of materials shall be made by a representative of the CONTRACTOR, unless otherwise provided. Testing of equipment shall be the responsibility of the CONTRACTOR or an authorized manufacturer's representative. All test results shall be furnished to the ENGINEER in writing. The CONTRACTOR shall provide facilities required to collect and forward samples. The CONTRACTOR shall furnish the required samples without charge.

C. The CONTRACTOR shall not make use of or incorporate in the work, the materials represented by the sample until tests have been made and the material found to be in accordance with the requirements of the Specifications.

D. Materials to be tested and the applicable test procedure shall be as outlined in the individual sections of these Specifications.

1.05 Source and Quality of Materials and Equipment

A. The source of materials to be used shall be in accordance with the Contract Documents and as approved by the ENGINEER before delivery. The approval of the source of any material shall continue as long as the material conforms to the Specifications.

B. All material not conforming to the requirements of the Specifications shall be considered as defective and shall be removed from the work. If in place, faulty materials shall be removed by the CONTRACTOR at his expense and replaced with acceptable material unless permitted otherwise by the OWNER. No defective materials which have been subsequently corrected shall be reused until approval has been given.

C. Upon failure of the CONTRACTOR to comply immediately with any order of the ENGINEER to remove and replace defective material, the OWNER shall have authority to remove and replace defective materials, and to deduct the cost of removal and replacement from any monies due or to become due to the CONTRACTOR. Failure to reject any defective materials or work at the time of installation shall in no way prevent later rejection when such defects are discovered, nor obligate the OWNER to final acceptance.

1.06 Additional Testing

In addition to soils laboratory and materials testing, the CONTRACTOR shall perform other testing called for in the Contract Documents including but not limited to piping, pressure, leakage, infiltration and exfiltration, as appropriate.

PART 2 PRODUCTS - Not Used

PART 3 EXECUTION - Not Used

END OF SECTION

SECTION 01550

TEMPORARY TRAFFIC CONTROL

PART 1 GENERAL

1.01 Section Includes

Traffic and dust control

1.02 Related Sections

Section 01520 - Temporary Facilities and Controls

1.03 Definitions

The term "Temporary Traffic Control" as used herein, shall include all facilities, devices, traffic control personnel, and operations as are required for the safety and convenience of the public as well as for minimizing public nuisance.

1.04 References

A. Florida Department of Transportation Roadway and Traffic Design Standards

B. Manual on Uniform Traffic Control Devices

1.05 Submittals

Provide a signed and sealed traffic control plan prepared by a Professional Engineer licensed in the State of Florida or an individual within the company that has a current Certificate for a FDOT Approved Temporary Traffic Control course. Include proposed signs, markings, barricades, detour routes, sequencing, and phasing for vehicular and pedestrian traffic routes during construction. This plan shall be based upon the CONTRACTOR's means and methods as well as the proposed schedule of work.

1.06 Qualifications

Provide at least one employee in the field (superintendent or foreman) who holds a current Certificate for a FDOT Approved Temporary Traffic Control course. This certified employee shall be on the job site when the traffic control measures are installed and when work is occurring within the zones.

PART 2 PRODUCTS - Not Used

PART 3 EXECUTION

3.01 Site Preparation

A. Contact property owners affected by construction. Coordinate temporary driveway closures and sequencing. Maintain access for all property owners during construction.

B. Remove existing pavement markings and remove or relocate existing signs, signals and the like as necessary to implement traffic control.

C. Install signs, markings, barricades in accordance with approved traffic control plan.

D. Implement lane closures in accordance with the parameters shown on the drawings and in the approved traffic control plan.

E. Perform work in a manner that will cause minimum interruptions to traffic.

F. Place excavated material outside roadway clear zones, and away from pedestrian facilities.

G. All trenches shall be backfilled each day prior to the completion of construction activities.

H. Where special hazards exist, install traffic control through the use of lighted concrete barriers, barricades, or other such traffic control facilities as needed to ensure public safety.

3.02 Maintenance

A. Inspect traffic control devices on a daily basis to ensure placement of barricades and function of lights is maintained throughout construction.

B. Wet unstabilized areas as necessary to control dust.

C. Adjust traffic control devices as required under emergency conditions.

D. A stabilized route for private residents affected by the work zone must be maintained for emergency vehicle access, waste collection, and private deliveries.

END OF SECTION

SECTION 02100
SPECIFIC TECHNICAL SPECIFICATION
(Engineering Standards Manual)

PART 1 - GENERAL

1.01 DESCRIPTION

A. The City of Ocoee Engineering Standards Manual, a separately covered document, shall be an integral part of the Contract Documents for this project.

B. Engineering Standards Manual has not been included as part of the bid documents. Contractor may obtain a PDF formatted Engineering Standards Manual from the City of Ocoee Utilities Department.

C. The Engineering Standards Manual (latest version at the time of bidding the project) is intended to provide construction and material standards, material and systems testing procedures, and construction requirements.

D. It shall be the Contractor's responsibility to provide/perform all labor, work and material in conformance with the requirements of Engineering Standards Manual.

E. References to the development community within the Engineering Standards Manual shall not be germane to this project.

City of Ocoee
Engineering Standards Manual

MISSION

This Engineering Standards Manual is a firm technical guideline for engineering materials' design, construction, and layout for all improvements that shall be dedicated, owned, and/or maintained by the City of Ocoee.

INTRODUCTION

The provisions of this Manual are established in order to effectively carry out the purposes of the **Land Development Code of the City of Ocoee,** in the interests of public health, safety, and welfare of the citizens and inhabitants of Ocoee, Florida.

Should there be any discrepancy or conflict between the Engineering Standards Manual and any applicable City Codes, such as the Land Development Code, the most stringent and restrictive specification, condition and/or directive shall apply. If any item is not specifically addressed in this manual, good engineering standards shall be practiced and is subject to the City Engineer's approval.

DISCLAIMER

The City of Ocoee, in the form of this manual, its attachments and documents referenced herein, is attempting to provide the best available information in an electronic format. It is the responsibility of the recipient to ensure that this information is the most recent, up to date, and in its entirety, as was originally provided by the City. This information is provided as is, without warranty or guarantee of any kind. The entire risk, as to quality, performance, and accuracy, are with the recipient. In no event, is the City of Ocoee or its Staff liable for any direct, indirect, incidental, special, consequential, punitive or other damages whatsoever (including loss of profit, loss of information, interruptions, or other pecuniary losses) arising from the use of or inability to use this data.

I agree to the terms and conditions set forth in this document, take me to the
TABLE OF CONTENTS

I Agree

Engineering Standards Manual

Table of Contents

February 20, 2012

Article			Article
1	General Provisions	Underdrains	18
2	Definitions	Sidewalk/Bike Paths, Concrete Curb, Etc.	19
3	Design Standards	Chain Link Fence	20
4	Right-of-Way Utilization	Grassing and Mulching	21
5	Site Preparation, Surface Removal and Restoration	Pavement Markings	22
6	Excavation, Trenching, and Backfilling	Medians	23
7	Clearing and Grubbing	Turn Lanes and Tapers	24
8	Earthwork	Driveways	25
9	Subbase	Utility Line Installation Requirements	26
10	Soil Cement Base	Wastewater Facilities Design	27
11	Limerock Base	Gravity Sanitary Sewers	28
12	Prime and Tack Coats for Base Course	Sanitary Sewer Force Mains	29
13	Asphaltic Concrete Surface Course	Sanitary Sewer Pump Stations	30
14	Portland Cement Concrete Pavement	Potable Water System	31
15	Quality Control	Reclaimed Water System	32
16	Culverts and Storm Sewers	Horizontal Directional Drilling	33
17	Inlets and Manholes	Stormwater Management	34

Approved Manufacturer's List

Engineering Details

ARTICLE 1

GENERAL PROVISIONS

Index

1.01 GENERAL
1.02 REFERENCE MATERIALS
1.03 PRE-CONSTRUCTION CONFERENCE
1.04 UTILITY COORDINATION
1.05 UTILITY CONSTRUCTION
1.06 START OF CONSTRUCTION
1.07 CONSTRUCTION COMPLETION
1.08 OFF-SITE POLLUTION PROTECTION
1.09 INSPECTION
1.10 TRANSFER OF PRIVATE OWNERSHIP
1.11 PROPERTY OWNERSHIPS
1.12 PLANS AND SPECIFICATIONS

BACK TO TABLE OF CONTENTS

Section 1.01 GENERAL

The Standards set forth in this Manual are meant to provide minimum Standards for the design and construction of facilities which meet the following conditions:

1) Public and private facilities, to be constructed within the City's corporate limits.

2) Facilities to be dedicated to the City for ownership.

3) Facilities to become future additions to the City's utilities and transportation systems.

This Manual is not meant to be totally restrictive in nature; that is, it does not depict the only acceptable method of design. Rather, its purpose is to describe minimum acceptable Standards of construction and to promote uniformity. The individual requirements of the Manual shall be superseded by the requirements established for Specially Planned Areas and the Comprehensive Plan, where applicable.

Should any design be submitted which varies appreciably from the Standards set herein or uses materials other than those recommended, it must be accompanied by appropriate supporting documentation or engineering studies for review and is subject to the approval of the City Engineer or his Designee.

All plans submitted for review must be in conformance with all Federal, State and City regulations and codes. In no case shall minimum standards be less than those established by recognized governmental agencies, unless stated otherwise in these Specifications.

Where a certain manufacturer is specified for a particular piece of equipment, non-specified product equals may be approved by the City Engineer or his Designee after submittal of a request in writing and accompanied by supporting documentation. An approved Manufacturer's List is attached as part of this Manual to assist the Engineer and the Contractor.

Pre-application meetings are recommended and pre-Construction conferences are mandatory between the Owner/Developer, their Engineer, their Contractor(s), all utilities, and the City Staff when City facilities are involved.

Section 1.02 REFERENCE MATERIALS

Unless otherwise stated, the most recent publications of the following organizations shall be referred to as required. Other publications may be used in the implementation of the Standards.

A) Water Environment Federation (WEF)

B) American Society for Testing Materials (ASTM)

C) United States Occupational Safety and Health Administration (USOSHA)

D) American Association of State Highway and Transportation Officials (AASHTO)

E) American National Standards Institute (ANSI)

F) American Water Works Association (AWWA)

G) National Fire Protection Association (NFPA)

H) National Science Foundation (NSF)

I) American Society of Civil Engineers (ASCE)

J) Florida Department of Transportation (FDOT)

K) Institute of Transportation Engineers (ITE)

L) Federal Highway Administration (FHWA)

M) American Asphalt Institute (AAI)

N) Portland Cement Association (PCA)

O) American Concrete Institute (ACI)

P) Underwriters Laboratories, Inc. (UL)

Q) Insurance Services Office (ISO)

R) Environmental Protection Agency (EPA)

S) National Pollutant Discharge Elimination System (NPDES)

T) Sunshine State One Call System Of Florida (SSOCSOF)

U) Federal Specification (FS)

Section 1.03 PRE-CONSTRUCTION CONFERENCE

It shall be required that a pre-construction conference between the Owner/Developer, their Engineer, their Contractor, all utilities, and the City Staff be held at least 5 days before commencement of any construction within the corporate limits of the City of Ocoee. All applicable City, State and Federal Agency permits are required to be in the possession of the Owner/Developer prior to the pre-construction meeting.

Section 1.04 UTILITY COORDINATION

It shall be up to the Owner/Developer to coordinate all utilities concerning development. All utilities shall be given notice prior to commencement of construction in accordance with F.S. 553 and F.S.556 and guidelines of SSOCOF.

Section 1.05 UTILITY CONSTRUCTION

Utility lines of any kind, including, but not limited to, traffic signal systems, street lighting, those of franchised utilities, electric power and light, telephone and telegraph, cable television, water, sewer, and gas, shall be constructed and installed beneath the surface of the ground unless it is determined by the City Engineer, and approved by the City Commission, that soil, topographical, or any other compelling conditions make the installation of such utility lines as prescribed herein unreasonable or impractical. It shall be the Owner's/Developer's responsibility to make the necessary arrangement with each utility in accordance with the utility's established policies. The underground installation of incidental appurtenances such as transformer boxes, pedestal mounted boxes for electricity, or similar service hardware necessary for the provision of electric and communication utilities may be required at the discretion of the City Engineer. When appropriate, all materials shall be Listed for the purpose for which it is used.

Section 1.06 START OF CONSTRUCTION

The City Engineer or his Designee shall be notified, in writing, at least 5 days in advance of the proposed date of the beginning of construction. Any time that work is to stop for a period of time in excess of 5 working days, other than stoppage beyond the Contractor's control, and holidays, the City Engineer shall be notified in writing of such interruption. The Engineering Plans, as approved by the City, and all revisions shall be readily accessible to City personnel during all periods of activity. No activity shall be permitted without these documents on-site. Someone of responsible charge must be on-site during all construction activities.

Section 1.07 CONSTRUCTION COMPLETION

All requirements stated in the LDC shall be complied with by the Owner/Developer prior to any occupancy of any private or public improvements.

Section 1.08 OFF-SITE POLLUTION PROTECTION

It shall be the Owner's/Developer's responsibility to provide, in accordance with the LDC, all associated Ordinances and State and Federal Agencies, and the NPDES regulations, all downstream and offsite water quality and siltation protection required during construction. In any event, it shall be the Owner's/Developer's responsibility to remove any downstream siltation prior to the time of final inspection. Air pollution, such as dust, shall also be controlled at all times.

Section 1.09 INSPECTION

1.09.01 Periodic

Representatives of the City shall periodically visit the project site to make a visual inspection of the progress of the work and methods of construction. Upon observation of work not done in accordance with the Plans and Specifications, the City will notify the Owner's/Developer's Contractor and the Owner/Developer or his Designee and request that the necessary corrections be made. All inspections shall be scheduled a minimum of 24 hours in advance. Special inspections requested by Owner/Developer. The City can come out at any time without prior notice.

1.09.02 Substantial Completion

Substantial Completion inspection may be provided when the project justifies the need for the process prior to the issuance of a Certificate of Completion. The Owner/Developer must submit a written request for a formal Substantial Completion inspection and shall include the following;

a) Exclude wall, landscaping, irrigation, and other amenities.

b) Include water, sewer, reuse, storm roads, rough grading and signage (FDEP Water and Sanitary clearances shall have been issued).

c) Require a written document from developer requesting formal inspection.

d) Reference that developer has already punch listed project and all items completed.

e) State that project is built in accordance with plans and specifications and include an initial set of As-Built Drawings.

f) Engineering Department will schedule an all department formal inspection with written punch list back to Engineering Department.

g) Engineering Department will coordinate with OCPW, OCUD and FDOT as applicable.

Engineering will review all punch lists and make determination of Substantial Completion. A written response to developer on substantial completion including all punch lists will be provided to the Owner Developer. If deemed to be Substantially Complete the developer can start construction of production homes.

1.09.03 Final

The City shall be notified when the project is complete. Upon receiving at least a 48 hour prior request, excluding weekends and holidays, for final inspection of the completed work, the City's representatives, together with the representatives of other interested agencies, shall perform the final inspection. The following submittals shall be required prior to Final Inspection: Payment for any failed material tests, all applicable Certifications of Completion from other agencies, Clearances for Utility Systems and Final Record Drawings, including digital and hard copies.

Section 1.10 TRANSFER OF PRIVATE OWNERSHIP

When transfer of private facilities to public ownership is desired and the City Engineer concurs, all such private facilities shall be brought up to the current City Standards at no cost to the City, in so far as construction and maintenance are concerned, before the City will accept such facilities. Proof of satisfactory completion of the facilities, approved construction plans as Record Drawings, the 2 year maintenance bond with itemized construction costs, Bill of Sale for improvements dedicated to the City, and the appropriate legal documents shall be furnished to the City Engineer prior to acceptance.

Section 1.11 PROPERTY OWNERSHIPS

All facilities to be owned and maintained by the City shall be located on City property, within City rights-of-way, or in easements dedicated to the City for the uses intended.

Section 1.12 PLANS AND SPECIFICATIONS

1.12.01 General

All submitted plans shall be standard size sheet (24" x 36" or 11" x 17") with title block. Graphic scale(s) shall be provided on each sheet and all lettering shall be 0.08 x scale (Leroy 80) or larger to permit photographic reproduction. Color aerial photography plan sheet(s) is/are required for the property/project area and shall include an area 100’ outside the limits of the proposed project improvements. Submittal of Specifications shall only be required when special facilities outside the scope of this Manual are proposed. All Plan sheets, detail sheets and the title page of submitted and Bound Specifications must be signed, sealed and dated by the Engineer of Record licensed in the State of Florida.

1. 12.02 Master Plan

Whenever possible, the entire water, reuse, and wastewater systems shall be shown on a single Master Plan. The Master Plan shall indicate the general locations of all mains, manholes, valves, hydrants, services and service laterals with respect to the proposed development improvements and the existing water and wastewater systems. Main sizes shall be indicated on the Master Plan.

1. 12.03 Plan and Profile

All utilities including gravity sewers, all wastewater force mains, storm sewers and off-site water mains shall be drawn in plan and profile. On-site water and reuse mains may be shown in plan view only.

Whenever possible, on-site water and wastewater systems shall be shown on the same Plans sheet. As a minimum, the plan and profile drawings shall include the following information:

A) General information such as north arrow, names of Designer and Engineer, revision block with dates, graphic scale(s) and sheet number.

B) Plan and profile with elevations at 100 foot intervals, or more frequently if required by good design practice.

C) Development layout with horizontal and vertical controls.

D) All conflicts with other utility and drainage systems.

E) All manhole locations and rim elevations for manholes outside of paved areas.

F) Pipe data including size, lengths, material, and slopes.

G) Size, type, and locations of fittings, valves, hydrants, air release/vacuum relief, and other related appurtenances.

H) Limits of pipe deflection. (Would not recommend allowing – require fittings)

I) Limits of special exterior coatings.

J) Limits of special bedding requirements.

K) Pipe restraint requirements and limits of restrained joints.

L) Details of connection to existing systems.

M) Location(s) and general layout of wastewater pumping stations.

N) Construction notes regarding cover, horizontal and vertical control, special construction requirements, and references to standard and special details.

O) Point of Service for fire sprinkler system and location of fire department connection.

1. 12.04 Details

The Plans shall include all applicable Standards as identified in this Manual with appropriate Details. Special details shall be prepared by the Engineer for aerial and underwater crossings of rivers, streams, canals and ditches. Other special details shall be prepared by the Engineer as required.

1. 12.05 Scale

The Master Plan shall be prepared at a scale not to exceed l" to 200'. Plan and profile sheets shall not exceed a scale of l" to 50' horizontally and 1' to 5' vertically. Special details shall be of sufficiently large scale to show pertinent construction information.

1. 12.06 Complete Submittals

Plans for any review and submittal shall be complete. The Owner shall be responsible for payment of fees when the City provides reviews more extensive than reasonably expected due to the submittal being incomplete and/or inadequate.

ARTICLE 2

DEFINITIONS

BACK TO TABLE OF CONTENTS

Except where specific definitions are used within a specific ARTICLE or Section of this resolution or the purpose of such Sections, the following terms, phrases, words, and their derivation shall have the meaning given herein when not inconsistent with the context. Words used in the present tense include the future tense, words in the plural number include the singular number and words in the singular number include the plural number. The word "shall" is mandatory, and the word "may" is permissive.

AASHTO - means American Association of State Highway and Transportation Officials. Any reference to AASHTO Standards shall be taken to mean the most recently published revision unless otherwise specified.

ANSI - means American National Standards Institute. Any reference to ANSI Standards shall be taken to mean the most recently published revision unless otherwise specified.

ASTM - means American Society for Testing Materials. Any reference to ASTM Standards shall be taken to mean the most recently published revision unless otherwise specified.

AWWA - means American Water Works Association. Any reference to AWWA Standards shall be taken to mean the most recently published revision unless otherwise specified.

City - means the City of Ocoee, Florida.

City Engineer - means the Engineer or his designee or other appointed officer of Ocoee, Florida, acting directly or through an assistant or other appointed representative, acting only within the scope of the particular duties assigned by the Land Development Code.

Construction Inspector - means the construction representative of the Engineering Department or other field appointed representative, acting only within the scope of the particular duties assigned by the City Engineer.

Contractor -means the person, firm, or corporation with whom the contract for work has been made by the Owner/Developer or the City.

Developer - means any person or legal entity who is responsible for any undertaking that requires an administrative or regulatory permit.

DIPRA - means Ductile Iron Pipe Research Association.

Drawings - means engineering drawings prepared by an ENGINEER to show proposed construction.

ENGINEER - means a Professional Engineer or engineering firm registered with the Florida State Board of Professional Engineers, other than direct employees of the City of Ocoee, retained to provide professional engineering services for a project.

FDOT - means the Florida Department of Transportation.

Geotechnical/Soils Engineer - means a Registered Florida Engineer who provides services related to terrain evaluation and site selection, subsurface exploration and sampling, determination of soil and rock properties, foundation engineering, settlement and seepage analysis, design of earth and earth retaining structures; as well as the design of subsurface drainage systems and the improvement of soil properties and foundation conditions; as well as testing and evaluation of construction materials.

ISO - means Insurance Services Office. Any reference to ISO Standards shall be taken to mean the most recently published revision unless otherwise specified.

Landscape Architect - means a Landscape Architect registered in the State of Florida who provides professional services related to the planning and development of land and incidental water areas, where the purpose of these consulting services is the preservation, conservation, enhancement, or determination of land uses, natural and man-made features, siting of buildings and structures, grounds and approaches, the setting of grades, contouring of land and water forms, determination of stormwater drainage, and irrigation systems. (From Florida Statute Chapter 481, Part II.)

LDC - means the Land Development Code of the City of Ocoee, Florida.

Listed - means equipment, materials, or services included in a list published by an organization acceptable to the authority having jurisdiction and concerned with evaluation of products or services that maintains periodic inspection of production of listed equipment or materials or periodic evaluation of services, and whose listing states either that the equipment, material, or service meets identified standards or has been tested and found suitable for a specified purpose.

Manual - means this City of Ocoee Engineering Standards Manual.

MANUAL ON UNIFORM TRAFFIC CONTROL DEVICES (MUTCD) - means the United States Department of Transportation Manual on Traffic Control Devices, latest edition, unless otherwise specified.

NEMA - means National Electrical Manufacturers Association. Any reference to NEMA Standards shall be taken to mean the most recently published revision unless otherwise specified.

NSF - means National Sanitation Test Laboratory Foundation. Any reference to NSF Standards shall be taken to mean the most recently published revision unless otherwise specified.

OSHA - means the Federal Occupational Safety and Health Administration. Any reference to OSHA Standards shall be taken to mean the most recently published revision unless otherwise specified.

Owner - means any person or legal entity having sufficient proprietary interest to undertake development pursuant to the Land Development Code.

Plans - means Drawings as defined herein above.

Public Works Director - means the Engineer or other appointed officer of Ocoee, Florida, acting directly or through an assistant or other appointed representative, acting only within the scope of the particular duties assigned by the Land Development Code.

Specifications - means the specifications contained in this Manual.

Standards - means the minimum design Standards contained in this Manual.

Standard Specifications - means the Department of Transportation, State of Florida, Standard Specification for Road and Bridge Construction, latest edition, unless otherwise specified.

Substantially Completed - means that date when the work is completed in accordance with this Manual or the Projects Contract Documents, with the exception of the minor items identified during the inspection process. Upon substantial completion, the work can be utilized for the purposes for which it is intended if the public's health, safety, and welfare will not be endangered.

Typical City Details - means the detailed drawings in this Manual related to general civil engineering materials and installation.

ARTICLE 3

DESIGN STANDARDS

Index

3.01 GENERAL
3.02 STREETS AND OTHER PAVEMENTS
3.03 EASEMENTS
3.04 SURVEY MONUMENTS
3.05 CURBS AND GUTTERS
3.06 STORMWATER MANAGEMENT
3.07 DECORATIVE ENTRANCES
3.08 OWNER/DEVELOPER CONTROL DURING CONSTRUCTION
3.09 EROSION CONTROL
3.10 PHASED DEVELOPMENT
3.11 TRAFFIC CONTROL DURING CONSTRUCTION
3.12 RESIDENTIAL DEVELOPMENT
3.13 TRAFFIC SIGNAL PRE-EMPTION SYSTEM

BACK TO TABLE OF CONTENTS

Section 3.01 GENERAL

The lands included within the development shall be suitable for the various purposes proposed and shall not be subject to poor drainage, erosion or other conditions detrimental to the health, safety and general welfare of the public. Further, no development plan shall be approved unless the City finds, after full consideration of all pertinent data, that the development can be served adequately with such normal public facilities and services as are suitable in the circumstances of the particular case. The Owner/Developer shall be responsible for the acquisition of all materials, installation and construction costs, and legal documentation for all on-site and off-site activities of the proposed development.

A Professional Engineer, registered in the State of Florida and qualified by virtue of training and experience to practice the engineering discipline involved, shall be employed to design all required improvements such as streets, traffic control, drainage structures, bridges, bulkheads, and utility facilities, and to provide such professional services during construction as are generally considered to be part of a complete engineering service. Upon request, the Owner/Developer shall submit to the City Engineer signed documentation to this effect. All plans for improvements shall be prepared and sealed by such Engineer and approved by all appropriate regulatory agencies and the City prior to the commencement of the improvements. Street lighting plans for the development shall be prepared by the power company supplying service to the development. Florida Statute shall govern the preparation of all site plans and related engineering drawings submitted to the City.

3.01.01 Conformance with City Policy

The subdividing and/or development of any areas shall conform to the adopted general goals and objectives of the City with respect to the physical development of the City as set forth in various documents including, but not limited to:

A) The Ocoee Comprehensive Plan.

B) City policies and Services and Facilities as enunciated by applicable City Ordinances.

C) The Land Development Code of the City of Ocoee.

D) The Engineering Standards Manual.

E) Ordinances of the City of Ocoee.

3.01.02 Use of Natural Features

The arrangement of structures, stormwater systems, lots and blocks, and the street system shall make the most advantageous use of topography and preserve mature trees, wetlands, and other natural features wherever possible.

3.01.03 Consideration of Soil and Flood Hazards

All land intended for use in a development plan for building sites must be able to be used safely for building purposes without danger from flood or other inundation, or from adverse soil or foundation conditions or from any other menace to health, safety, or public welfare. No filling or grade level change shall be permitted which will reduce the flood storage volume available between the base flood elevation and the normal ground water elevation to adversely affect any surrounding area. No development shall be permitted in the 100 year flood plain. The Orange County Soil Survey is to be used as a guideline in identifying soil properties and interpretations for various uses in terms of soil limitations and soil features adversely affecting a particular use.

The following Standards shall be followed in areas of low and very low potential soils:

A) Soils with either very low potential or low potential for proposed uses, as identified in the Soil Survey, shall not be developed unless such soils are removed or modified to accommodate the intended use, as approved by the City Engineer.

B) Public facilities shall not be constructed where the soil performance for said public facility is of low or very low potential, except in cases of overriding public interest.

C) Dedication shall not be accepted for public ownership or maintenance of utilities or roads constructed in areas where soil performance for said facilities is of low or very low potential.

3.01.04 Special Considerations

Special consideration shall be given in the layout of streets, lots, blocks, buildings, and easements to the preservation of large and specimen individual trees as identified by the Ocoee Comprehensive Plan. Special consideration shall also be given to preserving natural drainage methods and natural topography and landscape. Special consideration shall be given to providing special screening, landscaped or natural buffers, or landscaped berms where developments abut non-compatible land uses in accordance with the LDC. Special consideration shall be given to conformance with streets and driveway spacing Standards in accordance with the LDC and this document. Special consideration shall be given during the development design process to not only make the site accessible to the public through the use of handicap parking and ramps, off-site sidewalks/bikeways, and interconnection of adjacent sites; but also where possible encourage the use of alternative mode of travel by providing transit stops and shelters, on-site sidewalks/bikeways, bike racks, and signed and marked reserved employee ride share parking spaces.

3.01.05 Record Drawing Requirements

All "as-built" information submitted to the engineer shall be sufficiently accurate, clear and legible to satisfy the engineer that the information provides a true representation of the improvements constructed. Upon completion of construction, the contractor shall submit to the engineer of record complete sets of "as-built" construction drawings as required for submittal and approval. These drawings shall be marked to show "as-built" construction changes and dimensioned locations and elevations of all improvements and GPS data table and shall be signed and sealed by a Florida registered land surveyor. The following information shall be included in the "as-built" submittal at a minimum:

A) Sanitary Sewer:

1. Top elevation of each manhole frame and cover.
2. Invert of each line entering and leaving each manhole/structure.
3. Length of each run of main between manholes (center to center).
4. Actual grade of pipe between manholes.
5. Locate all service wyes from downstream manhole with depth at lot line and distance from the main line.
6. Field measurements for location from permanent visible objects all fitting/accessories not visible from the surface (minimum two point ties) (including clean-outs).

B) Storm Drainage:

1. Top elevation of each manhole frame and cover/grate as well as all other structures (headwalls, control structures, etc.).
2. Invert elevation of each line entering and leaving each structure, including underdrain pipes.
3. Inverts of all mitered end sections.
4. Actual grade of pipe between the structures.

5. Invert elevation and two horizontal ties from permanent visible objects to all storm stub-outs, underdrain cleanouts, yard drains, etc.

C) Water and Reuse System and Force Main

1. Actual lengths between all fittings and valves along the main run.
2. Locate with measurements from permanent visible objects all fittings/accessories not visible from the surface (minimum two point ties).
3. As-built information on water systems shall include locations of all fire hydrants, water services, blow-off assemblies, and top of pipe elevations at all fittings and at a minimum of 100 feet spacing along the length of the mains.
4. All sample points shall be shown in the "as-built" drawings and shall be sequentially numbered throughout the entire project without duplication between plan sheets. The numbering shall conform with those indicated in the samples for fdep clearances.

D) Utility Crossing Separation Information for that on the Plans Verifying:

1. Size and material of crossing pipes.
2. Top elevation of bottom pipe.
3. Bottom elevation of top pipe.
4. Finish surface elevation over utility crossing.

E) Pavement Grades and Drainage Patterns

1. Pavement profiles and critical points shall have verified elevations indicating the constructed finished grade.
2. Drainage patterns indicated by the design drawings shall have verified spot elevations indicating the finished grade.

F) GPS Data:

The x, y and (z) location based on the coordinate system Florida east zone state plane coordinate feet NAD 83, of all manholes (rim elevation), lift stations (rim elevation), cleanouts (grade), sample points (grade), fittings (center of pipe) and meter boxes (grade), etc. Shall be clearly shown. Acceptable position accuracy shall be sub-meter or better for compatibility with global positioning system (GPS) equipment.
The GPS data shall be provided in an asset table incorporated as a section of the final "as-built" drawings and shall include the headings as follows:

Asset #; utility system (water, sewer, reclaimed water, force main, stormwater); description; X-Coord.; Y-Coord.; Z-Coord.

Asset #	Utility System	Feature	X-Coordinate	Y-Coordinate	Z-Coordinate
001					
002					
003					
004					

Section 3.02 STREETS AND OTHER PAVEMENTS

3.02.01 General

The design character, width, grade and location of all streets and bridges shall conform to the Standards in this Section and shall be considered in their relation to existing and planned streets, to topographical conditions, to public convenience and safety, and in their appropriate relation to the proposed uses of the land to be served by such streets. Whenever not modified by these Standards, the guidelines of the Manual of Uniform Minimum Standards for Design, Construction and Maintenance for Streets and Highways, (FDOT), and the Standards of the American Association of State Highways and Transportation Officials, referred to therein, shall be the minimum acceptable standard.

3.02.02 Minimum Standards For Right-of-Way Improvement

A) Sidewalks/Bikeways: It is the intent of the City that every new residential lot or non-residential development shall construct its portion of the city wide pedestrian/bikeway system. If a variance to these provisions is granted, the Owner/Developer shall execute a sidewalk agreement with the City to ensure the future installation of the facilities.

B) Driveway Approaches: Driveway approaches shall be 3,000 psi concrete, at least 6 inches thick, with break and/or expansion joints at property line. Sidewalk/bikepath shall be constructed with the driveway section. Expansion joints shall be installed at the tie-in point with sidewalks and curbing. All installations to maintain a slope of ¼ inch per 1 foot horizontal.

C) Streets: Abutting rights-of-way shall be paved as hereinafter specified.

1) Design Specifications

Streets shall be classified based on the definitions and with consideration of vehicle trip generation ratios unless superseded by alternative ratios adopted by the City. Where the City has adopted a higher classification than the classification based on projected traffic volumes, the higher classification shall be used. All streets shall be designed in accordance with the Manual of Uniform Minimum Standards for Design, Construction and Maintenance for Streets and Highways (FDOT), LDC, and the following minimum specifications, except that greater requirements must be met when imposed by an agency having jurisdiction of a particular road. Horizontal alignments shall be based on a minimum design speed of 35 MPH except for local residential streets. Local residential streets shall have a minimum back of curb horizontal curvature of 50 feet without superelevation.

2) Minimum Street Grade Specifications

Percent Grade of Roadway

Table 3-1			
Centerline:	Arterial Street	Collector Street	Local Street
Maximum	10%	10%	10%
Minimum	0.50%	0.50%	0.50%

Slopes less than 0.50% shall require special approval by the City Engineer.

The minimum cross slope shall be 2% except in necessary transitions.

3) Intersection Design

a) Streets and driveways shall be laid out to intersect as nearly as possible at right angles (90°) or radial, however, in no case shall the angle of the intersection be less than 60°. Multiple intersections involving the juncture of more than 2 roadways and driveway approaches shall be prohibited. The gradient within 100 feet of the intersection and driveway shall not exceed 3%. The design shall comply with the Specifications contained in the Manual of Uniform Minimum Standards for Design, Construction and Maintenance for Streets and Highways (FDOT).

b) A minimum sight distance of 250 feet from any intersection shall be maintained on the intersecting streets. Greater distances may be required to satisfy FDOT and the Manual of Uniform Minimum Standards for Design, Construction and Maintenance for Streets and Highways (FDOT). In all cases, clear sight distance from any intersection shall be maintained on the adjoining streets.

4) Radii at Intersections

The minimum intersection radii of back of curb at all typical intersections approximating a right angle shall be as follows:

Table 3-2	
Category	Minimum Radius
Local to Local - Residential	25'
Local to Local - Non-Residential	35'
Local to Collector	35'
Local or Collector to Arterial	50'
Collector to Collector	30'

A deceleration lane and taper shall be required as outlined in ARTICLE 24 of this Manual. A minimum radius of 30 feet shall be provided at all intersecting right-of-way lines.

The design and construction of larger or smaller radii maybe required by the City Engineer based upon the type of design vehicles and design speed of the roadway.

5) Pavement Specifications

Improvements designed as above shall be provided as required by the following schedule:

a) For residential developments, improvements shall conform to STANDARD A., For Standard configuration see, Typical City Details attached as part of this Manual.

b) For all other developments, improvements shall conform to STANDARD B., For Standard configuration see, Typical City Details attached as part of this Manual

c) Where the proposed development includes or abuts an existing full or half right-of-way street, said street shall also be improved as required to conform to the following Standards.

d) When a modification to the width of an existing roadway is necessary, a minimum of 1 1/2 inch of asphaltic concrete overlay with leveling shall be installed the full length and width of the entire affected section of the adjacent roadway.

STANDARD

TABLE 3-3		
A	B	1) Grading and centerline gradients shall be provided on the plans and as approved by the City. (See Section 3.02)
		2) Curb and gutters shall be provided as follows:
A		a) Standard 24 inch wide Miami Residential or FDOT Type F curb and gutter.
	B	b) Standard 24 inch wide FDOT Type F curb and gutter.
A	B	c) Standard Type A concrete curb shall be used on center medians and islands.
A	B	d) Density under curb and gutter shall be to a minimum density of 98% of the maximum density determined by AASHTO T-180
A	B	3) Subbase shall be approved by the City Engineer as being suitable material prepared in accordance with Standards established by this Manual. Twelve inches shall be the minimum thickness unless otherwise stated in this ARTICLE.
		4) Pavement base shall be improved as follows:
A	B	a) Arterial Streets: 10 inch compacted limerock / soil cement
	B	b) Collector and Commercial Streets: 10 inch compacted limerock / soil cement
A		c) Local Streets: 8 inch compacted limerock / soil cement
		Note: an equivalent type or alternate base material may be approved by the City Engineer if field situation dictates.
		5) Wearing surface shall be improved as follows:
A	B	a) Arterial, Collector and Commercial Streets: 1-¾ inch structure course and 1 inch friction course. Non-skid surfaces may be required. FDOT-applicable asphaltic concrete shall be used unless otherwise approved by the City Engineer
A	B	b) Local Streets: Minimum of 2 inch asphaltic concrete surface course or the equivalent as meeting Standards established by the City. Non-skid surfaces may be required. FDOT-applicable asphaltic concrete shall be used unless otherwise approved by the City Engineer. City Engineer may require surface treatment to be applied in two (2) layers with final top layer being installed after build-out.
A	B	6) Grassing and mulching of flat areas, or sodding of swales, parkway medians, percolation areas, and planting strips shall be in accordance with City Standards. In no case shall mulching of driveways be permitted.

A	B	7) Street name signs in accordance with City specifications and appropriate block numbers shall be installed on all public streets at all intersections. The street name signs will be installed by the City upon notification from the Developer in writing that the roads are complete. The Owner/Developer shall order and pay for all such signage, including installation cost, prior to issuance of any building permits. The signs shall be in place prior to the City's final acceptance of the roadway.
A	B	8) Street lighting shall be installed at the expense of the Developer, and includes payment of 2 years worth of up-front fees. All utilities are to be installed underground. Poles shall not be placed in medians or directly adjacent to the roadway or within sidewalks/bikeways. Wherever practical, poles shall not be installed immediately adjacent to sidewalks/bikeways. The poles shall be placed either in an easement or adjacent to the right-of-way line to allow a minimum 5 foot clearance from the nearest edge of pavement. Location modification shall be specifically approved by the City Engineer prior to installation.
A	B	9) Traffic control devices such as signs and pavement markings and traffic signalization devices shall be installed by the Owner/Developer at the Owner's/Developer's expense within the project area and on abutting streets and highways in accordance with the MUTCD and as approved by the City Engineer. Modification requests shall be specifically approved by the City Engineer prior to installation.
A	B	10) For two years from City Commission's project acceptance, the Owner/Developer shall warranty all constructed facilities in public rights-of-way and easements by Surety document approved by the City being either a Letter of Credit or Cash.

3.02.03 Additional Right-of-Way and/or Pavement Width

Whenever any street shows future need for improvement within the area to be developed, the appropriate right-of-way or pavement width, in conformance with minimum City Standards shall be required to be dedicated as outlined in the LDC.

Half streets and substandard rights-of-way and pavement widths shall be prohibited. Where a previously dedicated incomplete or substandard street, improved or unimproved, abuts or is within a tract to be developed, the remainder of the right-of-way shall be dedicated and the full street improved according to City Standards.

3.02.04 Access

Vehicular access shall be provided as follows and as outlined in the LDC.

A) Minimum number of access points to adequately serve the development without decreasing the safety and capacity of the public rights-of-way. Joint-use driveways may be required by the City. All developments shall also be evaluated by the City of Ocoee Fire Rescue Department for emergency access.

B) In order to provide ease and convenience for ingress and egress to private property, with maximum safety and the least interference to the traffic flow on public streets, the number and location of driveways for roadways with classification of collector and above, shall be regulated by the dedication of access rights to the City in accordance with the LDC.

C) Deceleration and acceleration lanes, left-turn lanes, bypass lanes, and tapers are required on all roads with a classification of collector and above unless exempted by the City Engineer. Median relocations and modifications or other design features may be required at the discretion of the City Engineer to protect and maintain the safe and efficient operation of the public rights-of-way.

D) All buildings, when constructed, shall be accessible to fire department apparatus by way of access roadways with an all weather driving surface of not less than 20 feet of unobstructed width and a turning radius of 40 feet capable of supporting the imposed loads of fire apparatus. This access shall also have a minimum vertical clearance of 13 feet 6 inches. All hydrants shall remain serviceable during project construction, unless otherwise approved by the City of Ocoee Fire Rescue Department.

E) Driveways shall be installed as depicted in ARTICLE 25 of this Manual.

3.02.05 Paved Access to Nearest Paved Public Road

A development shall abut or have as its primary access onto a street designed and paved to standard requirements of the authority having jurisdiction (City, County, State). The Owner/Developer shall install or upgrade the street from the entrance of the development to the nearest public paved road of proper functional classification as determined by the City Engineer.

3.02.06 Commercial/Industrial Driveways and Internal Circulation

A) Vehicular circulation must be completely contained within the property. Vehicles located within one portion of the development must have access to all portions without using the adjacent street system and be capable of accommodating the vehicles associated with the development.

B) Acceptable plans must illustrate that proper consideration has been given to the surrounding street plan, traffic volumes, proposed street improvements, vehicular street capacities, pedestrian movements, and safety.

1) Driveways directly accessing thoroughfares or accessing local streets adjacent to thoroughfares shall meet the design requirements of the LDC.

2) Driveways accessing other local streets shall not intersect or be nearer than 50 feet (20 feet for residential) to the adjacent driveway without the approval of the City Engineer. Where possible, driveways shall be located a minimum of 200 feet (50 feet for residential) from public intersections. Measurement is based on nearest edge of pavement to nearest edge of pavement.

C) Deceleration lane and tapers shall be required as outlined in ARTICLE 24 of this Manual.

D) Appropriate special radii shall be designed, subject to the approval of the City Engineer for other than right-angle (90°) intersections.

Section 3.03 EASEMENTS

Easements shall be centered on rear or side-lot lines where necessary. Easements shall be provided as determined by the LDC. "Vehicular Access Easements" shall be located as approved by the City Engineer.

Where necessary for safety and convenience, "Construction Easements" of suitable width shall be required as determined by the City. No public easement shall be occupied without first obtaining a Right-of-Way Utilization Permit. When encroachment is desired, the applicant shall contact all utilities doing business within the City, prior to the City granting permit.

"Joint-Use Access Easements" shall be required, as necessary, to provide safe and adequate access to a site and for the protection of the capacity and safety of the adjacent roadway.

Any off-site easements, needed to make the system function, shall be included in the proposal for development and made a criteria for plan approval.

Easements for all facilities must be shown on construction drawings and approved by the City. The easement documents and rights-of-way deeds must be executed, accepted and recorded by the City. All recording fees shall be paid to the City prior to recording in the Public Records or issuance of a building permit. All easements for private developments shall be provided at no expense to the City.

Section 3.04 SURVEY MONUMENTS

Permanent Reference Monuments (PRMs) and Permanent Control Points (PCPs) shall be placed as required by Florida Statutes. A letter from a Florida registered Land Surveyor certifying that all monuments, PCPs, PRMs are in place as of the date of the project acceptance shall be required of all developments. The Contractor shall be responsible for re-establishing all disturbed survey markers and/or monuments. All survey work shall be performed in accordance with pertinent memoranda and shall comply with Minimum Technical Standards, as adopted by the Florida Board of Land Surveyors, pursuant to Florida Statutes.

Section 3.05 CURBS AND GUTTERS

All streets shall be paved and drained in accordance with FDOT Standard curb-and-gutter (or Miami curb in residential areas), unless otherwise specifically approved by the City Engineer. Curbing shall be used for stormwater conveyance, traffic control channelization, and the protection of landscaped areas.

The width of the curb and gutter shall be a minimum of 24 inches and shall be as outlined by this Manual. Simple vertical curbing within rights-of-way will not be acceptable to the City. Approved mountable median curb, of the FDOT type, may be used, as approved by the City Engineer. All curbing designed to handle water shall incorporate an approved gutter design.

No water valve boxes, meters, portions of manholes, or other appurtenances of any kind relating to any underground utilities shall be located in any portion of a curb-and-gutter section. The minimum allowable flow line grade of curbs and gutters shall be 0.40% except in intersections where flatter grades shall be allowable. Cross-street valley gutters shall not be allowed.

Section 3.06 STORMWATER MANAGEMENT

3.06.01 General Requirements

Protection of water resources is critical to the public health, safety, and welfare. Innovative approaches to stormwater management shall be encouraged and the concurrent control of erosion, sedimentation, and flooding shall be mandatory. No site alteration shall cause siltation of wetlands, pollution of downstream wetlands, or reduce the natural retention or filtering capabilities of wetlands.

3.06.02 Stormwater Management

A complete stormwater management system shall be provided in all areas of the project and for handling stormwater runoff that flows into or across the project area from the outside, without undesired additional flooding of any other land. The system shall be designed for long life, low maintenance cost, and ease of maintenance by normal maintenance methods. Soil types shall be considered and full development of the basin assumed for selection of proper runoff coefficients within the basins involved. Refer to ARTICLE 34 of this Manual for design specifications. Should the proposed development area contain an existing natural watercourse drainageway, channel, etc., such natural watercourse and the vegetation inherent therewith shall be maintained and the proposed development designed so as to preserve same unless otherwise permitted.

3.06.03 Guidelines for Berms

Slopes are preferred to be 5:1 or less on berms and other applications. Slopes 3:1 shall be the maximum permissible slope, unless specifically addressed elsewhere in this Manual, but shall be stabilized with sod or other stabilizing material. Retaining walls require the approval of the City Engineer or his Designee and must be signed and sealed by the Engineer for any walls exceeding 2 feet in height. Where berms or slopes are specifically addressed in other ARTICLES of this Manual, they shall conform to that ARTICLE.

Section 3.07 DECORATIVE ENTRANCES

Where an Owner/Developer is specifically permitted by the City to construct decorative landscaping within the right-of-way of any street, the Owner/Developer shall provide a maintenance agreement acceptable to the City for perpetual maintenance of such landscaping and shall provide for removal of such landscaping on order by the City for cause. The City shall not accept liability or responsibility for maintenance of landscaping in rights-of-way and shall be held harmless for any damage done to same in work performed by the City in such right-of-way. The design and maintenance of the landscaping shall comply with the City's set back regulations for fixed object hazards and for driver clear sight distance. Private signs are prohibited within public rights-of-way.

A minimum sight distance per the LDC must be maintained at all public road intersections including those with driveways. Structures are prohibited in the rights-of-way except as permitted by the City Engineer in accordance with the LDC.

Section 3.08 OWNER/DEVELOPER CONTROL DURING CONSTRUCTION

The Owner/Developer shall be required during the entire construction period to control, regulate, and maintain the development in such a manner as to prevent the accumulation of trash and debris, resulting from the Owner's/Developer's construction activities, on both the site and adjacent public and private property, which would detract from the enjoyment and pleasure in the natural scenic beauty of the City, and, in turn, injuriously affect the economic well-being of the public. The use of residential lots in nearby developments or Substantially Completed phases of the same development, under the ownership and control of said Owner/Developer, for the bulk storage of construction materials substantially unrelated to the development of those residential lots is prohibited. A development shall be deemed to be Substantially Completed when 70% of the planned units are completed and ready for occupancy, or are actually occupied.

Section 3.09 EROSION CONTROL

All development shall follow erosion control methods as described in this section, FDOT Design Standards, and FDEP Stormwater, Erosion and Sediment Control Program and Manual.

Seeding, mulching, sodding, and/or other acceptable methods shall be used to prevent erosion during all construction activities per requirements as specified in the LDC.

The Owner/Developer of commercial and residential lots shall be required to maintain curbs and gutters free of accumulations of sand and earth. Temporary siltation basins may be required during construction. Maintenance shall be provided by the Owner/Developer for the 2 year period of the maintenance period and for each lot until final inspection is passed. All actions to prevent erosion or pollution shall be done in accordance with this Manual.

3.09.01 Stormwater Pollution Prevention Plan (SWPPP)

If required by the City Engineer, the SWPPP, details, and calculations shall document all the measures necessary to limit the transport of sediments outside the limits of the project to the volume and amount that existed prior to the commencement of construction. This condition shall be satisfied for both the total anticipated construction period at a minimum and for the 2.3 year frequency, 6 hour duration storm event. Provisions must be made to preserve the integrity and capacity of check weirs, sediment basins, slope drains, grading patterns, etc. required to meet this provision throughout the life of the construction. Submittal of a Stormwater Pollution Prevention Plan shall comply with the requirements of the FDEP and SJRWMD.

3.09.02 Stockpiling Material

No excavated material shall be stockpiled in such a manner that directs runoff directly off the project site or into any adjacent water body or stormwater collection system. No building construction or landscaping materials shall be stored within public rights-of-way or on the streets.

3.09.03 Exposed Area Limitation

The surface area of open, raw, erodible soil exposed by clearing and grubbing operations or excavation and filling operations shall not exceed 10 acres. This requirement may be waived for large projects with an erosion control plan, which demonstrates that opening of additional areas will not significantly affect off-site deposit of sediments.

3.09.04 Inlet Protection

Inlets and catch basins shall be protected from sediment laden storm runoff until the completion of all construction operations that may contribute sediment to the inlet.

3.09.05 Temporary Seeding

Areas opened by construction operations that are not anticipated to be dressed and receive final grassing treatment within 30 days shall be seeded with a quick growing grass species which will provide an early cover during the season in which it is planted, and will not later compete with the permanent grassing. The rate of seeding shall be a minimum of 30 lb per acre.

3.09.06 Temporary Seeding and Mulching

Slopes steeper than 6:1 that fall within the category established in 3.09.05 above, shall be mulched using a minimum of 2 inches, loosely measured, mulch material, cut into the soil of the seeded area to a total depth of 4 inches.

3.09.07 Temporary Grassing

The seeded or seeded and mulched area(s) shall be rolled and watered as required to assure optimum growing conditions for the establishment of a good grass cover.

3.09.08 Temporary Regrassing

If, after 14 days, the temporary grassed areas have not attained a minimum of 75% good grass cover, the area will be reworked sufficiently to establish the desired vegetative cover.

3.09.09 Maintenance

All features of the project designed and constructed to prevent erosion and sediment shall be maintained during the life of the construction so as to function as they were originally designed and constructed.

3.09.10 Permanent Erosion Control

The erosion control facilities of the project shall be designed to minimize the impact on off-site facilities. All stormwater discharge from the project limits shall be routed through detention basins to trap suspended sediments. Discharge facilities from these basins shall be provided with a skimming device to trap floatable debris.

3.09.11 Permanent Seeding

All areas which have been disturbed by construction shall, as a minimum, be fertilized and seeded. The fertilizer shall be of 12-8-8 proportions and shall be uniformly spread at a rate of 400-500 lb per acre and mixed with the soil to a uniform depth of 4 inches. Included with the fertilizing operation will be the application of amendments, if necessary, such as dolomitic limestone of aluminum sulfate to correct the pH factor to within the limits of 6.0-7.0. The grass seed shall be uniformly spread at the rate of 100 lb per acre while the soil is moist. The grass seed mixture shall be of 20 parts bermuda and 80 parts bahia, with the addition of 30 parts rye in the winter season.

3.09.12 Permanent Seeding and Mulching

In addition to the minimum requirements of 3.09.11 above, slopes of from 6:1 to 4:1 inclusive shall be mulched using a 2 inches, loosely measured, mulch material cut into the soil of the seeded area to a total depth of 4 inches.

3.09.13 Permanent Sodding

All retention/detention basins shall be solid sodded within their limits. All exposed areas within public rights-of-way shall be solid sodded. Other areas with slopes steeper than 4:1 shall be solid sodded.

3.09.14 Strip Sodding

Strip sod shall be placed adjacent to all curbs, walks and pavements to the dimensions indicated in the Typical Cross-section provided in the approved plans.

3.09.15 Regrassing

All grassed areas shall be maintained to assure a good stand and sufficient ground cover to minimize erosion. If, after 60 days, an adequate ground cover has not been established, the area will be regrassed.

3.09.16 Additional Fertilization

Grassed areas not accepted within 90 days of their completion shall be refertilized at an application rate of 250 lb per acre.

Section 3.10 PHASED DEVELOPMENT

Each phase of any development shall be capable of standing on its own as if subsequent areas planned for development are not developed.

Residential Developers and Builders shall follow the erosion and sediment control principles and practices above and the following during construction on individual lots:

A) Silt fences/barriers shall be installed on lot lines adjacent to pond, natural, and conservation areas to minimize erosion. Silt fences/barriers shall also be installed as needed to prevent erosion/flooding of adjacent built-out lots and streets.

B) During construction, streets shall be kept free of excessive dirt and construction debris. Hay bales, sand bags or other approved erosion and sediment control devices shall be installed and maintained at stormwater inlets. Streets shall not be used for storage of construction materials. Containers shall be provided for holding trash and construction debris.

C) Prior to final acceptance, erosion and sediment control provisions (sodding and seeding/mulching) on adjacent vacant lots shall be restored. Erosion and sediment control precautions shall be taken where erosion and/or washouts can be anticipated, particularly along side lot lines. All construction debris and excess dirt shall be removed from adjacent vacant lots (including those across the street).

Section 3.11 TRAFFIC CONTROL DURING CONSTRUCTION

The Owner/Developer shall prohibit public traffic from using newly constructed roadways until they are accepted and approved to be opened by the City Engineer or his Designee. Barricades and other safety devices shall remain in place until such time as deemed appropriate to remove them, or until such time as the hazard to health and safety of the general public has been reduced to minimal acceptable standards.

The Owner/Developer shall be required to provide work zone traffic control during construction within the public rights-of-way until approval is given by the City Engineer or his Designee to remove the controls as established in accordance with the MUTCD.

Section 3.12 TRAFFIC SIGNAL PRE-EMPTION SYSTEM

All traffic signals shall be equipped with an Opticom Traffic Signal Pre-Emption System. The system shall be usable by an emergency vehicle approaching from all intersection directions. Before installation, the system plans shall be reviewed and approved by the City of Ocoee Fire Rescue Department and Orange County's Traffic Engineering.

ARTICLE 4

RIGHT-OF-WAY UTILIZATION

Index

4.01 GENERAL
4.02 DEFINITIONS
4.03 EXCLUSIONS
4.04 GENERAL REGULATIONS
4.05 RESTORATION AND MAINTENANCE
4.06 UTILITY ACCOMMODATION
4.07 INSPECTION
4.08 OPERATIONAL SAFETY
4.09 EXISTING USES

BACK TO TABLE OF CONTENTS

Section 4.01 GENERAL

The purpose of this ARTICLE, in the interest of public health, safety and welfare of the citizens and inhabitants of the City of Ocoee, Florida, is to control, by the issuance of Right-of-Way Utilization Permits, the utilization of the public rights-of-way and public easements lying within the City of Ocoee. It is the intent of this ARTICLE to promote good engineering practices which will assure the maximum utilization of the public rights-of-way and public easements by all the citizens, with the lowest life cycle cost to all due safety, operation and maintenance. Right-of-way Utilization Permits shall be obtained as prescribed in the City of Ocoee Code of Ordinances. All activities within the jurisdiction of this Manual shall be reported to all Utilities in the area at least 48 hours prior to commencement. Permits from other entities may be required in addition to the City permit.

Section 4.02 DEFINITIONS

The term “right-of-way” and the term “easement” as used in this ARTICLE, unless otherwise designated, shall be deemed public rights-of-way and public easements.

Section 4.03 EXCLUSIONS

All construction and maintenance performed within the public rights-of-way and public easements lying within the City of Ocoee, Florida, unless specifically exempt, are within the purview of this ARTICLE, regardless of size or extent. Exclusion from any part in this ARTICLE does not provide exclusion (applicability of) of any other provisions.

Section 4.04 GENERAL REGULATIONS

Pre-application meetings are recommended and pre-Construction conferences are mandatory between the Owner/Developer, their Engineer, all utilities, and the City Staff when City facilities or improvements to be dedicated to the City are involved.

In all cases, full consideration shall be given to sound engineering principles and economic factors. Final determination of the types of facilities permitted shall be based on a cost/benefit analysis of the feasible alternatives. Consideration shall be given to aesthetics by all right-of-way users avoiding unnecessary appurtenances.

All construction and maintenance shall be performed with proper shoring, barricades, and maintenance of traffic signage in accordance with the MUTCD, the regulations of the Florida Industrial Safety Board, and the FDOT Safety Manual. All street closures will be restricted to the limits of rights-of-way with necessary traffic control devices and markings. A Right-of-Way Utilization Permit shall be required.

Shoring shall be required where necessary to protect existing pavement, and must be properly protected and removed.

All side drains, side ditches and storm sewers shall be referenced as to grade and location prior to construction.

Where direct burial of utilities is not required, only single-pole support systems shall be permitted within the rights-of-way. Any exception must be amply justified and approved by the City Engineer. Where it is necessary to place aerial crossings which may interfere with traffic, careful planning of work with regard to the safety of vehicular traffic is mandatory. No temporary supports shall be allowed closer than the minimum clearance unless they are incorporated with a suitable barrier system. Such temporary construction shall be completed in the minimum time possible as approved in the Permit.

Where feasible, all longitudinal underground facilities shall be placed outside of the pavement of main-traveled lanes. Where encasement is used, the encasement pipe shall have strength equal to or exceeding the carrier pipe. Encasement shall be in accordance with ARTICLE 26 of this Manual. PVC pipe used in roadway crossings for use as non-pressure conduit intended for direct burial, or concrete encasement, unless otherwise specified, shall have a minimum pipe stiffness of 120 psi at a deflection of 0.2 inch, when tested in accordance with ASTM D-2412. Casing shall normally be required for paved roadway crossings of underground utilities where the carrier is of insufficient strength due to composition or depth of cover in accordance with this Manual.

All gas piping to be maintained by public and private utilities must comply with the Federal Standards as listed in the Florida Public Service Commission Rule 25-12.05, as amended by Order No. 5221, with any subsequent modifications thereto.

All jack and bore crossings shall be a continuous operation at each location at the proper location and depth. Any deviation from the above will be sufficient grounds for work stoppage, plugging the line with concrete, and replacing the line at the proper location. All operations shall be in accordance with ARTICLE 26 of this Manual.

Open cutting of existing roadway pavement shall generally not be allowed, but may be considered under one or more of the following conditions upon the City Engineer's approval:

A) Subsurface obstructions.

B) Limited space for jacking pits.

C) Condition of roadway surface, including imminent resurfacing and rebuilding.

D) Where facility design prohibits.

E) Extreme economic hardship.

In any analysis of a request for open cutting, primary consideration shall be given to the safety and convenience of the public. Permitted open cuts shall be in accordance with the Typical City Details attached as part of this Manual. The City Engineer will consider use of other methods where conditions warrant.

Where an open cut is considered, a smooth all-weather surface must be provided and maintained all times. Permanent replacements of the temporary patch shall be made within 5 days of completion of the crossing. Proper repairs of open cuts shall be in accordance with this Manual.

The City shall establish control of access based upon location, geometric design, and traffic operations controls (in accordance with this Manual), all of which shall encourage safe and efficient operations, as well as provide suitable and sufficient access.

Any construction and maintenance performed within the rights-of-way and public easements of the City that encroach or affect in any way a primary drainage canal, lake, drain well, and/or drainage easement or right-of-way under the jurisdiction of Orange County shall also obtain a Right-of-Way Utilization Permit from the County complying with the existing ordinances of Orange County, Florida and its Right-of-Way Utilization Regulations.

Section 4.05 RESTORATION AND MAINTENANCE

All public rights-of-way and public easements shall be restored to their original condition or better, in keeping with this Manual, and in a manner satisfactory to the City Engineer.

All excavated material in excess of the quantity required for backfill, and unusable material shall be disposed of at the Permitee's expense, and not placed within the limits of the public right-of-way or easement unless so directed by the City Engineer or his Designee.

At such locations where City signs and reflectors will interfere with proposed construction, the Permitee or their Consultant shall notify the City 48 hours in advance of starting work. All signs and reflectors will be removed or relocated only by City forces. Any signs or reflectors damaged, destroyed, removed, or relocated shall be replaced at the expense of the Permitee. No private signs of any type shall be permitted within the right-of-way.

Sodding operations are to begin as soon as fine grading and weather conditions permit, as directed by the City. Any private yards or part of the right-of-way in front of private property that has a grass mat shall be resodded with like sod.

All debris shall be removed and properly disposed of by the Permitee at the Permitee's expense. Dust control shall be mandatory.

All vegetation shall be provided the maximum protection as required by the LDC. The indiscriminate cutting of trees or disfiguring of any feature of scenic value, including methods such as herbicide treatment, shall not be permitted. Trees and/or shrubs destroyed during construction are subject to replacement at the Permitee's expense as directed by the City. The necessary trimming or cutting of trees by utility companies, in the interest of public safety or continuity of utility service, shall not be considered indiscriminate where such utilities cannot bypass the obstruction without violating the clear roadside policy. This shall not be construed to mean that existing pole lines must be relocated to comply with the above. City tree removal permits shall be obtained from the City Building Department.

All landscaping within public rights-of-way and public easements shall comply with the following provisions:

A) The City Engineer or his Designee may request line of sight calculations and details to determine the permissibility of various landscaping and signage in areas of ingress and egress per the requirements of this Manual.

B) In order for the City to allow the non-City installation of right-of-way or easement landscaping, a statement in writing as to who will be responsible for the maintenance of the project including watering, fertilizing, pruning, etc., shall be required. This statement shall come from the adjacent property Owner/Developer, the appropriate homeowners association, or civic organization.

C) The Permitee shall not hold the City responsible for any damage to the plants during subsequent right-of-way construction.

D) Landscaping within State and County rights-of-way within the limits of the City of Ocoee shall comply with Orange County or FDOT highway beautification and planting regulations and the City of Ocoee requirements.

E) Plants between 2 and 7 feet above the ground, in a median island within 100 feet of a crossover nose, shall provide a clear drivers sight distance. Conditions may require the above 100 foot length to be extended for safety considerations.

F) A 4 foot mowing strip shall be maintained between the plants and the curb or sidewalks/bikepaths. If plants are desired in this mowing strip they shall be kept under 24 inches.

G) No rock boulders, utility facilities, stationary signs, or above ground monuments shall be allowed in the medians.

H) Persons and equipment maintaining the project are to carry out their work in such a manner as not to obstruct vision or traffic flow.

I) Plantings shall be maintained at all times to prevent being a hazard in the safe operation of a vehicle, which includes the sight distance of drivers.

J) Trees planted within the right-of-way on high speed (50 MPH and above) and high volume roadways shall be 30 feet from the edge of the pavement or at the right-of-way line. Each location will be reviewed for any special requirements by the City.

K) Sprinkler heads and irrigation systems installed adjacent to public roadways and sidewalks shall be designed to insure public safety and shall not spray water over or on the roadway or sidewalk area. They shall not be operated during high pedestrian or vehicular travel times. On non-curbed streets, the sprinkler heads shall be located adjacent to the right-of-way line or on private property to prevent damage from any vehicles, parked or otherwise.

Section 4.06 UTILITY ACCOMMODATION

4.06.01 General

The placement of utilities within the public rights-of-way and public easements shall be placed in accordance with all applicable Codes, and current industry standards. All accommodations within the FDOT maintained right-of-way shall be in accordance with FDOT's Utility Accommodation Guide. All accommodations within the Orange County maintained roadways shall be in accordance with Orange County regulations. All other installations within the City maintained roadways shall be in accordance with this Manual.

As far as mechanically possible, the accommodations shall be followed for public right-of-way and public easement utilization within the City with the exception above.

All utilities are to be installed in accordance with the latest editions of the Federal Standards, as listed in the Florida Public Service Commission Rule 25.12.05, as amended by Order No. 5221 issued by the Commission on September 17, 1971, with any subsequent modifications thereto, the National Electrical Safety Code, FDOT's Safety Manual, MUTCD, LDC, this Manual, and any City Codes and Ordinances.

The criteria identified in this ARTICLE shall not be applied to a minor segment of an existing utility installation in such a manner as to result in misalignment of the installation or adjustment of the entire installation.

4.06.02 Light and Utility Poles

Light and utility poles shall be at least 18 feet from edge of pavement or at right-of-way line. Poles are permitted to within 12 feet from edge of pavement, provided a frangible base is used or if poles are placed behind a barrier. A minimum distance of 6 feet shall be required from the edge of pavement on deceleration and acceleration lanes. Where the design permits, a 14 foot clearance from finished grade shall be used. In curb and gutter sections, poles shall be at the right-of-way line with 4 foot minimum from face of non-mountable curb to front of pole. Edge of pavement does not include shoulder pavement.

In exposed areas, frangible or breakaway poles and light standards shall be considered to the extent practical. Where location is not exposed, consideration can be given to other type standards. Where feasible and practical, luminaries shall be attached to existing utility poles which meet offset criteria. For the purpose of this ARTICLE, frangible base poles will be accepted as bases in accordance with the FDOT Index Number 9623 (including later revisions), approved slip-type bases, or aluminum poles with an 8 inch outside diameter and 0.188 inch wall thickness, mounted on cast aluminum flange base, alloy 356-T6 and 356-F.

Projects where the 4 foot minimum offset would place the utility or other obstruction in substantial conflict with the sidewalk/bikepath or an unreasonable conflict with requirements of the National Electrical Safety Code would be created (in the case of power poles), and other alternatives are deemed impractical, the minimum may be reduced to 2½ feet from back of curb. Each case where this deviation is proposed must be supported on an individual basis and approved by the City Engineer or his Designee.

4.06.03 Mailboxes and Newspaper Boxes

Non-single family mailboxes, newspaper boxes, etc. shall be placed on private property or at the right-of-way line where possible. Poles may be located up to 6½ feet from right-of-way line, provided that they are at least 18 feet from edge of pavement. In curb and gutter sections, poles shall be at the right-of-way line with 4 foot minimum from face of non-mountable curb to front of pole. Edge of pavement does not include shoulder pavement. Poles shall not be permitted in medians, except for temporary construction purposes where incorporated within a suitable barrier system. Privately owned boxes, etc. are placed at the Owner's expense and liability, and when in City right-of-way shall be removed/relocated if directed to do so by the City Engineer.

Single family mailboxes shall be constructed and/or installed in a manner that does not endanger the public. U.S. Postal regulations shall be considered.

4.06.04 Other Structures

Devices such as signal-strain poles, above ground enclosures, and other items whose construction and size would cause extensive damage to a vehicle if struck are to be located according to the standards for utility poles.

4.06.05 Underground Installations

Underground utility installations shall have a minimum vertical clearance of 36-inches below the top of roadway pavement or top of ground, including ditch grades.

4.06.06 Aerial Crossings

Aerial crossings shall be in accordance with the National Electrical Safety Code, and a minimum of 18 feet over roadways and driveways. Crossing shall not interfere with existing or planned signal installation.

The roadside clearances for above ground utility facilities shall be consistent with those clearances applicable to other obstacles on the type of highway involved, reflecting good engineering and economic considerations.

4.06.07 Excavation

Where possible, excavation shall not be allowed within 4 feet of the edge of pavement. This shall necessitate that the utility be placed a sufficient distance from the pavement. Where this requirement imposes a hardship on the utility due to a narrow distance between the back of curb and the right-of-way or edge of sidewalk/bikepath, the utility may place their facilities within 2 feet of the back of the curb, but only upon approval from the City Engineer or his Designee.

Section 4.07 INSPECTION

The City Engineer or his Designee shall inspect work within the scope of this Manual to ensure that the rights-of-way are established and/or restored properly. Upon project completion, a final inspection shall be required. The City's representatives, together with the representatives of other interested agencies, shall perform the final inspection. Provide 48 hour prior request, excluding weekends and holidays, for final inspection.

The job shall be inspected against the provisions of the approved plans and the City Engineer shall not recommend acceptance until all such provisions are met, and any required tests are performed and accepted.

The Contractor shall have all materials within the scope of this Manual and the right-of-way regulations inspected before being laid, concealed or covered.

The Contractor shall inform the City Engineer or his Designee at the time backfill or any other process which should be monitored is occurring, and provide any requested reports. The laying and simultaneous covering of power cables, telephone cables, television cables, and gas mains is allowed outside the pavement.

Section 4.08 OPERATIONAL SAFETY

The City Engineer may disapprove any curb cut, median opening, or access which will constitute a public hazard or create excessive conflicts in traffic or pedestrian flow, or adversely impact the public safety.

The City Engineer or his Designee shall authorize a “stop work” order upon any Permitee who is committing or creating unsafe acts which may create a public hazard, or who is not complying with the provisions of the permit and this ARTICLE. The order shall remain in effect until such time as these matters are corrected.

The City Engineer or his Designee shall not be held responsible for any damages as a result of the above actions taken under this ARTICLE.

Section 4.09 EXISTING USES

Any Owner/Developer of property on which there is a roadway access point lawfully in existence, but which is determined by the City to present a hazard to the public safety and welfare due to the location of curb cuts, median openings, or other matters regulated within this Manual, and which does not comply with this Manual and/or the LDC shall be required to reconstruct or alter such hazardous situation at the time of any modifications/permits (use-changes , remodeling, reconstruction, enlargement, alterations, paving).

Any curb cut made after the date of this publication, which fails to provide for smooth flow of traffic on and/or off the right-of-way and traveled way, shall be closed by the City until repaired. The City Engineer or his Designee shall make such closure upon notification to the property Owner/Developer. The closure shall be maintained until the condition has been corrected to the satisfaction of the City Engineer.

ARTICLE 5

SITE PREPARATION, SURFACE REMOVAL AND RESTORATION

Index

5.01 GENERAL DEVELOPMENT STANDARDS
5.02 CLEARING AND GRUBBING
5.03 EROSION CONTROL
5.04 DUST CONTROL
5.05 SURFACE REMOVAL
5.06 RESTORATION
5.07 FINISHED FLOOR ELEVATIONS

BACK TO TABLE OF CONTENTS

Section 5.01 GENERAL DEVELOPMENT STANDARDS

5.01.1 General

All land proposed for development within the City of Ocoee shall be suitable for the use proposed, shall be adequately served by public facilities and services, and shall conform to adopted goals, objectives, and policies of the City Commission. All proposed development shall also be consistent with the adopted Comprehensive Plan for the City.

5.01.2 Environmental Considerations

Development shall make advantageous use of natural topography and preserve mature trees wherever possible. Special development stipulations may be placed on areas with low and very low potential soils, areas within the 100 year flood plain, wetlands, and other unique environments. Because most environmental problems are site specific, conditions and proposals will be evaluated with permit reviews.

Section 5.02 CLEARING AND GRUBBING

Clearing and grubbing of property shall conform to ARTICLE 7 of this Manual.

Section 5.03 EROSION CONTROL

All commercial and residential Developers and Builders shall follow erosion control methods as described in Section 3.09 of this Manual. Erosion Control measures shall comply with the City of Ocoee criteria described in Section 3.09, FDOT Design Standards, and FDEP Stormwater, Erosion and Sediment Control Program and Manual

Section 5.04 DUST CONTROL

Contractor shall control dust resulting from clearing and grubbing operations to prevent nuisance to adjacent property Owners and the general public.

Section 5.05 SURFACE REMOVAL

Along the proposed pipe lines, as indicated on the plans, the Contractor shall remove the surface materials only to such widths as will permit a trench to be excavated, affording sufficient room for proper efficiency and construction. All applicable City regulations shall be followed under the guides of this Manual and FDOT Standards. Where sidewalks, driveways, pavements and curb and gutter are encountered, caution shall be taken to protect against fracture or disturbance beyond reasonable working limits. All fractured, broken or disturbed surfaces shall be restored to their original condition prior to completion of the work.

Section 5.06 RESTORATION

Restoration of all surfaces including road subbase, soil cement, limerock base, asphaltic concrete surface, Portland cement concrete pavement, driveways, sidewalks and concrete curbs shall be in strict accordance with this Manual. All grassing, sodding and mulching shall be done as specified in ARTICLE 21 of this Manual. In addition, Contractor shall restore all storm drains, culverts, inlets and storm manholes to equal or better condition in accordance with this Manual.

Section 5.07 FINISHED FLOOR ELEVATIONS

Lots and building sites shall be graded to permit construction utilizing a first floor elevation based on the following:

A) At least 2 feet above the 100 year flood plain elevation.

B) If a lot or site is reasonably level, or slopes toward a street, the minimum finished floor elevation shall not be less than 18 inches above the highest crown of that portion of the adjacent street, or right-of-way upon which the structure fronts. This applies to grading classified as Type A or B.

C) If a lot or site slopes away from a street or road with continuous slope to the rear, the finished floor elevation of any structure shall be at least 1 foot above the finished elevations at the side lot lines nearest the front corners of the dwelling. This requirement applies to grading classified as Type C.

D) In addition to the conditions of paragraphs A, B, and C above, the finished floor elevation shall be a minimum of 6 inches above the rim elevation of the nearest downstream gravity sewer manhole serving the lot.

E) It is the intent of the City that lots and building sites provide the necessary finished floor elevation without excessive filling of land. Specific grading plans with proposed finished floor elevations and grading shall be submitted for review and approval of the Public Works Department. When a subdivision lot grading plan has been prepared and approved, specified finished floor elevations and grading types shall be observed. Finished floor elevation shall not deviate below that specified in the grading plan, but may be increased up to 6 inches above that specified without approval. Justification shall be provided for raising finished floor elevation more than 6 inches above that specified. An approved plan that specifies individual elevations shall supersede the requirements of (B) and (C) above and this paragraph.

F) Swales shall be constructed to carry runoff along side lot lines without allowing unintended runoff to adjacent lots. Grading shall minimize the impact of runoff onto other lots when intended by Type B and C grading. Use of stem wall construction, retaining walls or other techniques shall be considered to improve drainage and aesthetics. Areas adjacent to structures or paved surfaces shall be graded to drain away from structures and pavement. Ponding shall be prevented.

G) All slopes of 4:1 or greater shall be sodded. Sodded slopes shall not exceed 4:1 without approval. Where lots adjoin ponds, natural, conservation, or common areas, the lot line elevation specified on the subdivision plans (or natural elevation) shall be maintained and the lot graded at a slope not to exceed 4:1.

ARTICLE 6

EXCAVATION, TRENCHING, AND BACKFILLING

Index

6.01 GENERAL
6.02 SOIL BORINGS AND SUBSURFACE INVESTIGATIONS
6.03 EXISTING UTILITIES
6.04 MATERIALS
6.05 SHEETING AND BRACING IN EXCAVATIONS
6.06 DEWATERING, DRAINAGE AND FLOTATION
6.07 EXCAVATION
6.08 BEDDING AND BACKFILL
6.09 COMPACTION
6.10 GRADING
6.11 MAINTENANCE
6.12 INSPECTION AND QUALITY ASSURANCE

BACK TO TABLE OF CONTENTS

Section 6.01 GENERAL

This ARTICLE covers excavation, backfill, fill and grading associated with utility trench and structural construction. The Contractor shall furnish all labor, materials, equipment and incidentals necessary to perform all excavation, backfill, fill, compaction, grading and slope protection required to complete the work shown on the Drawings and specified herein. The work shall include, but not necessarily be limited to: pump stations, manholes, vaults, conduits, pipes, roadways and paving; all backfilling, fill and required borrow; grading; disposal of surplus and unsuitable materials; and all related work such as sheeting, bracing and water handling.

Section 6.02 SOIL BORINGS AND SUBSURFACE INVESTIGATIONS

The Contractor shall examine the site and undertake subsurface investigations, including soil borings, before commencing the work. The City will not be responsible for presumed or existing soil conditions in the work area.

Section 6.03 EXISTING UTILITIES

The Contractor shall locate existing utilities in the areas of work prior to starting construction activities. If utilities are to remain in place, the Contractor shall provide adequate means of protection during earthwork operations. Should uncharted or incorrectly charted piping or other utilities be encountered during excavation, the Contractor shall consult the Owner of such piping or utility immediately for directions. Payment for damage and repair to such piping or utilities is the Contractor's responsibility.

The City shall not be responsible for uncharted or incorrectly charted water and wastewater mains or other utilities. It is the Contractor's responsibility to ensure that such facilities exist at the presumed point prior to commencing construction.

Section 6.04 MATERIALS

6.04.01 General

Materials for use as bedding and backfill shall be as described under this Section. The Contractor shall, upon request by the City, make an appropriate sample of this material available for testing by the City or its designated representative.

6.04.02 Structural Fill

Materials for structural fill shall be bedding rock or select common fill as specified herein or other suitable material as approved by the City.

6.04.03 Common Fill

Common fill shall consist of mineral soil, substantially free of clay, organic material, loam, wood, trash and other objectionable material which may be compressible or which cannot be compacted properly. Common fill shall not contain stones larger than 6 inches in any dimension, asphalt, broken concrete, masonry, rubble, or other similar materials. It shall have physical properties such that it can be readily spread and compacted during filling. Additionally, common fill shall be no more than 12% by weight finer than the No. 200 mesh sieve unless finer material is approved for use in a specific location by the City.

Material falling within the above Specifications, encountered during the excavation, may be stored in segregated stockpiles for reuse. All material which in the opinion of the City is not suitable for reuse, shall be spoiled as specified herein for disposal of unsuitable materials.

6.04.04 Select Common Fill

Select common fill shall be as specified above from common fill, except that the material shall contain no stones larger then 1½ inches in largest dimension, and shall be no more than 5% by weight finer than the No. 200 mesh sieve.

6.04.05 Bedding Rock

Bedding rock shall be $^{3}/_{16}$ inch to ¾ inch washed and graded stone (FDOT #57). This stone shall be graded so that 90% to 100% will pass a ¾ inch screen and 95% to 100% will be retained on a No. 8 screen. No stones larger then 1 inch in any dimension shall be accepted.

Table 6-1				
	Type of Fill	Usage	Final Compacted	%
1)	Trenched Pipe Foundation, Bedding, and Haunching	Beneath piping	6"	98
2)	Trenched Pipe Cover	Over and/or around piping	6"	98
3)	Utilities Trench Backfill	"Influence area" beneath other piping or utility lines	8"	98
		"Influence area" beneathrigid paving and railroad tracks	6"	98
		"Influence area" beneath non-rigid paving	9"	98
		Adjacent to or under structures	9"	98
4)	Structural Fill	All locations under minor structures (manhole, etc.)	8"	98
5)	Granular Fill	Below concrete slabbedding, foundations, rigid paving, and excavated areas adjacent to structures	8"	98
6)	Structural Backfill	(See Trench Backfill)		
7)	General Site Grading	Fill in other locations not covered herein	12"	92
		Topsoil Placement	12"	92

"Influence area" shall be considered the area within lines sloped downward at 45° from the outer edges of paving, foundations, and utility lines.

Section 6.05 SHEETING AND BRACING IN EXCAVATIONS

6.05.01 General

If required to support the sides of excavations, to prevent any movement which could in any way diminish the width of the excavation below that necessary for proper construction and to protect adjacent structures, existing piping and/or foundation material from disturbance, undermining or other damage, the CONTRACTOR shall construct and maintain sheeting and bracing. Care shall be taken to prevent voids outside of the sheeting, but if voids are formed, they shall be immediately filled and rammed.

6.05.02 Miscellaneous Requirements

For trench sheeting for pipes, no sheeting is to be withdrawn if driven below mid-diameter of any pipe and no wood sheeting shall be cut off at a level lower than one foot above the top of any pipe unless otherwise directed by the TWA. If, during the progress of the WORK, the TWA decides that additional wood sheeting should be left in place, it may direct the CONTRACTOR to do so. If steel sheeting is used for trench sheeting, removal shall be as specified above, unless written approval is given by the TWA for an alternate method of removal. All sheeting and bracing not left in place shall be carefully removed in such a manner as not to endanger the construction of other structures, utilities, existing piping or property. Unless otherwise approved or indicated on the Drawings or in the Specifications, all sheeting and bracing shall be removed after completion of the substructure. All voids left or caused by withdrawal of sheeting shall be immediately refilled with sand by ramming with tools specially adapted to that purpose, by watering or otherwise as may be directed.

The right of the TWA to order sheeting and bracing left in place shall not be construed as creating an obligation on its part to issue such orders, and its failure to exercise its right to do so shall not relieve the CONTRACTOR from liability for damages to persons or property occurring from or upon the work occasioned by negligence or otherwise, growing out of a failure on the part of the CONTRACTOR to leave in place sufficient sheeting and bracing to prevent any caving or moving of the ground.

The CONTRACTOR shall construct the sheeting outside the neat lines of the foundation unless indicated otherwise to the extent he deems it desirable for his method of operation. Sheeting shall be plumb and securely braced and tied in position. Sheeting, bracing and cofferdams shall be adequate to withstand all pressures to which the structure will be subjected. Pumping, bracing and other work within the cofferdam shall be done in a manner to avoid disturbing any construction already performed. Any movement or bulging, which may occur, shall be corrected by the CONTRACTOR at his own expense so as to provide the necessary clearances and dimensions.

Section 6.06 DEWATERING, DRAINAGE AND FLOTATION

6.06.01 General

The Contractor shall excavate, construct and place all pipelines, concrete work, fill, and bedding rock, in-the-dry. In addition, the Contractor shall not make the final 24 inches of excavation until the water level is a minimum of 1 foot below proposed bottom of excavation. For purposes of these Specifications, "in-the-dry" is defined to be within 2% of the optimum moisture content of the soil. The City reserves the right to ask the Contractor to demonstrate that the water level is a minimum of 1 foot below proposed bottom of excavation before allowing the construction to proceed.

Discharge water shall be clear with no visible soil particles and must be in compliance with all Regulatory Agency Requirements. Discharge from dewatering shall be disposed of in such a manner that it will not interfere with the normal drainage of the area in which the work is being performed, create a public nuisance, or form ponding. The operations shall not cause injury to any portion of the work completed, or in progress, or to the surface of streets, or to private property. The dewatering operation shall comply with the requirements of appropriate regulatory agencies. Additionally, where private property will be involved, advance permission shall be obtained by the Contractor. All dewatering activities shall comply with the current standards of SJRWMD and FDEP.

6.06.02 Additional Requirements

The Contractor shall, at all times during construction, provide and maintain proper equipment and facilities to remove promptly and dispose of properly all water entering excavations, and keep such excavations dry so as to obtain a satisfactory undisturbed subgrade foundation condition until the fill, structure, or pipes to be built thereon have been completed to such extent that they will not be floated or otherwise damaged by allowing water levels to return to natural elevations.

Dewatering shall at all times be conducted in such a manner as to preserve the natural undisturbed bearing capacity of the subgrade soils at proposed bottom of excavation.

It is expected that well points or other engineered dewatering systems will be required for pre-drainage of the soils prior to final excavation for some of the deeper in-ground structures, or piping and for maintaining the lowered groundwater level until construction has been completed to such an extent that the structure, pipeline or fill will not be floated or otherwise damaged. Well points shall be surrounded by suitable filter sand and negligible fines shall be removed by pumping.

The Contractor shall furnish all materials and equipment and perform all work required to install and maintain the drainage systems for handling groundwater and surface water encountered during construction of structures, pipelines and compacted fills.

During backfilling and construction, water levels shall be measured in observation wells located as directed by the City.

Continuous pumping shall be required as long as water levels are required to be below natural levels.

Section 6.07 EXCAVATION

6.07.01 General

Excavation consists of removal, storage and disposal of material encountered when establishing required grade elevations and in accordance with the notes shown in the Contract Documents. Authorized earth excavation includes removal and disposal of pavements and other obstructions visible on ground surface, underground structures and utilities indicated to be demolished and removed, and other materials encountered that are not classified as rock excavation or unauthorized excavation. Unauthorized excavation consists of removal of material beyond the limits needed to establish required grade and subgrade elevations without specific direction of the City. Unauthorized excavation, as well as remedial work directed by the City, shall be at the Contractor's expense. Such remedial work shall be performed as directed by the City.

If requested by the City, when excavation has reached required subgrade elevations, a Geotechnical/Soils Engineer shall make an inspection of conditions. If the subgrade is unsuitable, Contractor shall carry excavation deeper and replace excavated material with select common fill or bedding rock, as directed by the City.

If the Contractor excavates below grade through error, for convenience, or through failure to properly dewater the excavation or disturbs the subgrade before dewatering is sufficiently complete, the Contractor may be directed by the City to excavate below grade and refill the excavation using select common fill or bedding rock.

Slope sides of excavations shall comply with Local Codes and Ordinances, and with OSHA requirements. Contractor shall shore and brace where sloping is not possible due to space restrictions or stability of the material excavated. Sides and slopes shall be maintained in a safe condition until completion of backfilling.

Contractor shall stockpile satisfactory excavated materials at a location approved by the City until required for backfill or fill. When needed in the work, material shall be located and graded at the direction of a Geotechnical/Soils Engineer. Stockpiles shall be placed and graded for proper drainage. All soil materials shall be located away from the edge of excavations. All surplus and/or unsuitable excavated material shall be legally disposed of by the Contractor. Any permits required for the hauling and disposing of this material shall be obtained by the Contractor prior to commencing hauling operations.

6.07.02 Excavation For Structures

All such excavations shall conform to the elevations and dimensions shown in the Contract Documents within a tolerance of plus or minus 0.10 foot and extending a sufficient distance from footings and foundations to permit placing and removing form work, installation of services and other construction, inspection or as shown in the Contract Documents . In excavating for footings and foundations, care shall be exercised not to disturb the bottom of the excavation. Bottoms shall be trimmed to required lines and grades to leave a solid base to receive concrete.

6.07.03 Trench Excavation

Excavation for all trenches required for the installation of utility pipes shall be made to the depths indicated in the Contract Documents and in such manner and to such widths as will give suitable room for laying the pipe within the trenches, for bracing and supporting, and for pumping and drainage facilities. The bottom of the excavations shall be firm and dry and in all respects acceptable to the City.

Excavation shall not exceed normal trench width as specified in the Typical City Details attached as part of this Manual. Any excavation which exceeds the normal trench width shall require special backfill requirements as determined by the City.

Where pipes are to be laid in bedding rock, select common fill or encased in concrete, the trench may be excavated by machinery to or just below the designated subgrade, provided that the material remaining in the bottom of the trench is no more than slightly disturbed.

Where the pipes are to be laid directly on the trench bottom, the lower part of the trenches shall not be excavated to grade by machinery. The last of the material being excavated shall be done manually in such a manner that will give a shaped bottom, true to grade, so that pipe can be evenly supported on undisturbed material, as specified in the Typical City Details attached as part of this Manual. Bell holes shall be made as required.

Section 6.08 BEDDING AND BACKFILL

6.08.01 General

Material placed in fill areas under and around structures and pipelines shall be deposited within the lines and to the grades shown on the Drawings or as directed by the City, making due allowance for settlement of the material. Fill shall be placed only on properly prepared surfaces which have been inspected and approved by the City. If sufficient select common or common fill material is not available from excavation on-site, the Contractor shall provide fill as may be required.

Fill shall be brought up in substantially level lifts starting in the deepest portion of the fill. The entire surface of the work shall be maintained free from ruts and in such condition that construction equipment can readily travel over any section. Fill shall be placed and spread in layers by a backhoe or other approved method, unless otherwise specified. The Contractor shall assign a sufficient number of men to this work to insure satisfactory compliance with these requirements.

All fill materials shall be placed and compacted "in-the-dry". The Contractor shall dewater excavated areas as required to perform the work and in such manner as to preserve the undisturbed state of the natural inorganic soils.

Prior to filling, the ground surface shall be prepared by removing vegetation, debris, unsatisfactory soil materials, obstructions and deleterious materials. Contractor shall plow strip or break up sloped surfaces steeper than 1 vertical to 4 horizontal so that fill material will bond with the existing surface. When existing ground surface has a density less than that specified for the particular area classification, Contractor shall break up the ground surface, pulverize, moisture-condition to the optimum moisture content and compact to required depth and percentage of maximum density.

Before compaction, material shall be moistened or aerated as necessary to provide the optimum moisture content. Material which is too wet shall be spread on the fill area and permitted to dry, assisted by harrowing if necessary, until the moisture content is reduced to allowable limits. If added moisture is required, water shall be applied by sprinkler tanks or other sprinkler systems, which will insure uniform distribution of the water over the area to be treated and give complete and accurate control of the amount of water to be used. If too much water is added, the area shall be permitted to dry before compaction is continued. The Contractor shall supply all hose, piping, valves, sprinklers, pumps, sprinkler tanks, hauling equipment and all other materials and equipment necessary to place water in the fill in the manner specified. Contractor shall compact each layer to required percentage of maximum dry density or relative dry density in accordance with this Manual. Backfill or fill material shall not be placed on surfaces that are muddy, frozen or contain frost or ice. Contractor to Supply all materials and equipment necessary for proper installation.

6.08.02 <u>Bedding and Backfill For Structures</u>

Bedding rock shall be used for bedding under all structures as specified in the Latest Typical City Details. The Contractor shall take all precautions necessary to maintain the bedding in a compacted state and to prevent washing, erosion or loosening of this bed. Structural fill shall be used as backfill against the exterior walls of the structures. Fill shall be compacted sufficiently in accordance with these Specifications. If compaction is by rolling or ramming, material shall be wet down as required.

Backfilling shall be carried up evenly on all walls of an individual structure. No backfill shall be allowed against walls until the walls and their supporting slabs, if applicable, have attained sufficient strength.

In locations where pipes pass through building walls, the Contractor shall take precautions to consolidate the fill up to an elevation of at least 1 foot above the bottom of the pipes. Structural fill in such areas shall be placed for a distance of not less than 3 feet either side of the center line of the pipe in level layers not exceeding 8 inches in depth.

The surface of filled areas shall be graded to smooth true lines, strictly conforming to grades indicated on the Drawings. No soft spots or uncompacted areas shall be allowed in the work.

Temporary bracing shall be provided as required during construction of all structures to protect partially completed structures against all construction loads, hydraulic pressure and earth pressure. The bracing shall be capable of resisting all loads applied to the walls as a result of backfilling.

6.08.03 Bedding and Backfill For Pipes

Bedding for pipe shall be as shown on the plans and as specified in the Typical City Details attached as part of this Manual. The Contractor shall take all precautions necessary to maintain the bedding in a compacted state and to prevent washing, erosion or loosening of this bed.

Backfilling over and around pipes shall begin as soon as practical after the pipe has been laid, jointed and inspected as specified in the Typical City Details attached as part of this Manual.

Any space remaining between the pipe and sides of the trench shall be carefully backfilled and spread by hand or approved mechanical device and thoroughly compacted with a tamper as fast as placed, up to a level of 1 foot above the top of the pipe. The filling shall be carried up evenly on both sides. Compaction shall be in accordance with this Manual.

The remainder of the trench above the compacted backfill, as just described above, shall be filled and thoroughly compacted in uniform layers. Compaction shall be in accordance with this Manual.

Section 6.09 COMPACTION

6.09.01 General

The Contractor shall control soil compaction during construction to provide the percentage of maximum density specified. The Contractor shall provide the City copies of all soils testing reports, prepared by a Geotechnical/Soils Engineer, demonstrating compliance with these Specifications.

When an existing trench bottom has a density less than that specified under these Specifications, the Contractor shall break up the trench bottom surface, pulverize, moisture-condition to the optimum moisture content, and compact to required depth and percentage of maximum density.

6.09.02 Percentage of Maximum Density Requirements

The CONTRACTOR shall control soil compaction during construction to provide the percentage of maximum density specified. When utility work is conducted within FDOT right-of-way or other governing municipality, the more stringent minimum density standards shall apply.

Fill or undisturbed soil from the bottom of the pipe trench to one foot above the pipe to the finished grade elevation shall be compacted to a minimum density of 98 percent of the maximum dry density as determined by AASHTO T-180 for all structural areas or right of way or easements with vehicular traffic on top of the pipe. Other non– structural areas may be compacted to a minimum density of 95% of maximum dry density as determined by AASHTO T-180.

6.09.03 Compaction Tests

One compaction test location shall be required for each 300 linear feet of pipe and for every 100 square feet of backfill around structures as a minimum. The City may determine that more compaction tests are required to certify the installation depending on field conditions. The locations of compaction tests within the trench shall be in conformance with the following schedule:

A) One test at the spring line of the pipe.

B) At least one test for each 12 inch layer of backfill within the pipe bedding zone for pipes 24 inches and larger.

C) One test at an elevation of 1 foot above the top of the pipe.

D) One test for each 2 feet of backfill placed from 1 foot above the top of the pipe to finished grade elevation.

If, based on the Geotechnical/Soils Engineer testing reports and inspection, fill which has been placed is below specified density, Contractor shall provide additional compaction and testing prior to commencing further construction.

Section 6.10 GRADING

All areas within the limits of construction, including transition areas, shall be uniformly graded to produce a smooth, uniform surface. Areas adjacent to structures or paved surfaces shall be graded to drain away from structures and pavement. Ponding shall be prevented. After grading, the area shall be compacted to the specified depth and percentage of maximum density.

No grading shall be done in areas where there are existing pipelines that may be uncovered or damaged until such lines have been relocated.

Section 6.11 MAINTENANCE

Contractor shall protect newly graded areas from traffic and erosion and keep them free of trash and debris. Contractor shall repair and reestablish grades in settled, eroded and rutted areas.

Where completed compacted areas are disturbed by subsequent construction operations or adverse weather, Contractor shall scarify surface and reshape and compact to required density prior to further construction.

Section 6.12 INSPECTION AND QUALITY ASSURANCE

6.12.01 Inspection

Contractor shall examine the areas and conditions under which excavating, filling and grading are to be performed, and not proceed with the work until unsatisfactory conditions have been corrected.

Contractor shall examine existing grade prior to commencement of work and report to the City if elevations of existing grade vary from elevations shown on Drawings.

6.12.02 Quality Assurance

All work shall be performed in compliance with applicable requirements of governing authorities having jurisdiction.

The City shall provide quality control testing during construction to ensure compliance with these Specifications.

Contractor shall allow the testing service to inspect and approve fill materials and fill layers before further construction is performed. The Contractor shall be given copies of all test results. Contractor shall be financially responsible for all failed and/or substandard material testing.

ARTICLE 7

CLEARING AND GRUBBING

Index

7.01 GENERAL
7.02 CLEARING AND GRUBBING
7.03 DISPOSAL OF UNSUITABLE MATERIALS

BACK TO TABLE OF CONTENTS

Section 7.01 GENERAL

The work covered by this ARTICLE consists of clearing and grubbing and the proper removal and disposal of the resultant products and debris within the areas of the rights-of-way, easements, retention areas, and all other construction areas. Dust control is mandatory. All appropriate permits shall be obtained prior to start of activity. Existing trees and other vegetation that are designated to remain shall be protected in accordance with the LDC.

Section 7.02 CLEARING AND GRUBBING

Clearing and grubbing shall consist of the removal and proper disposal of all timber, brush, stumps, roots, grass, weeds, sawdust, rubbish, buildings, septic tanks, pipe, foundations, and all other deleterious material resting on or protruding through the surface of the excavated areas. All wells with no future use shall be abandoned in accordance with Florida Department of Environmental Protection and local Water Management District regulations.

In all areas of roadway construction and embankment, trees, stumps, roots, and other deleterious materials shall be removed to a depth of not less than 2 feet below the subgrade.

Section 7.03 DISPOSAL OF UNSUITABLE MATERIALS

Unsuitable material shall be the property of the Owner/Developer, and materials shall be disposed of in accordance with current City, County, State, and Federal Regulations.

ARTICLE 8

EARTHWORK

Index

8.01 GENERAL
8.02 EXCAVATION
8.03 UNSUITABLE MATERIAL
8.04 SUITABLE MATERIAL
8.05 DISPOSAL OF EXCESS MATERIAL
8.06 PLACING EMBANKMENT
8.07 SHOULDERS, DITCHES, AND SLOPES

BACK TO TABLE OF CONTENTS

Section 8.01 GENERAL

The work covered by this ARTICLE consists of excavation and embankment required for roadway, ditches, channel changes and other works.

Unless otherwise provided, this ARTICLE shall include all excavation, shaping, filling, sloping and finishing necessary for the construction, preparation, and completion of all embankments, subgrades, shoulders, ditches, slopes, gutters, intersections, approaches, private entrances, and other works all in accordance with the required alignment, grade, and cross sections shown on the plans or as directed, by the City Engineer or his Designee. All earthwork within the City of Ocoee will comply with FDOT Standard Specifications for Road and Bridge Construction, most current edition.

Section 8.02 EXCAVATION

While the excavation is being done and until the work is finally accepted, the Contractor shall take the necessary steps to protect the work to prevent loss of material from the construction area due to the action of wind or water. During construction, the area shall be maintained in such condition that it will not constitute a hazard and shall be well drained at all times.

Section 8.03 UNSUITABLE MATERIAL

Where muck, rock, clay, organic, or other materials within the limits of the construction area is, in the opinion of the City Engineer, unsuitable, the Contractor shall excavate to a depth approved by the City Engineer or his Designee and then backfill with suitable material in an approved manner, shaping to conform to the required cross section.

Section 8.04 SUITABLE MATERIAL

Suitable material excavated from existing City right-of-way shall be hauled to a designated location within the City. Location to be designated by City Engineer

Section 8.05 DISPOSAL OF EXCESS MATERIAL

Excess material shall be disposed of in accordance with current City, County, State of Florida, and Federal regulations.

Section 8.06 PLACING EMBANKMENT

Embankments shall be constructed of suitable materials placed in successive level layers not more than 12 inches in thickness, loosely measured, for the full width and the full length of the embankment, and compacted to a minimum density of 98% of the maximum density value as determined by AASHTO T-180.

Section 8.07 SHOULDERS, DITCHES, AND SLOPES

When the work includes surfacing or paving, the earthwork, including the slopes and all drainage structures, shall be Substantially Completed before the construction of the base course and pavement is started.

During the construction of the pavement, a shoulder at least 3 feet wide shall be maintained in place to properly support the edges of the pavement or curb. Before final acceptance by the City, the earth shoulders, slopes, and side ditches shall be completed and shaped to a surface which is within 0.1 foot above or below the true surface shown on the plans; except that, adjacent to pavement, curb, or sidewalk/bikepath, the shoulders shall be shaped to match the edge of the pavement, curb or sidewalk/bikepath. The shoulder line shall not vary more than 0.3 foot horizontally from the true lines shown on the plans.

All earth work within 5 feet of the roadway must be compacted to a minimum density of 98% of the maximum dry density as determined by AASHTO T-180.

ARTICLE 9

SUBBASE

Index

9.01 DESCRIPTION
9.02 SUBBASE REQUIREMENTS
9.03 STABILIZATION
9.04 CONSTRUCTION
9.05 TESTING

BACK TO TABLE OF CONTENTS

Section 9.01 DESCRIPTION

Subbase shall be defined as that portion of the roadbed immediately below the base course or pavement including below the curb and gutter, the limits of which will ordinarily include those portions of the roadbed shown in the plans. The limits of the subbase shall be considered to extend outward to 12 inches beyond the base. On roadways where curbs are utilized, the subbase shall extend to 12 inches beyond the back of curb.

All subbase material installed within the City of Ocoee will comply with the FDOT Standard Specifications for the Road and Bridge Construction, most current edition.

Section 9.02 SUBBASE REQUIREMENTS

Before the following items are constructed, subbase material is required as specified:

A) Stabilize top 12 inches to Limerock Bearing Ration (LBR) 40.

B) Compact to a minimum density of 98% of the maximum density determined by AASHTO T-180 for top 12 inches.

Section 9.03 STABILIZATION

The stabilizing material shall be high bearing value soil, sand-clay, limerock, shell, or other material approved by the City Engineer and shall meet the physical requirements of FDOT.

Section 9.04 CONSTRUCTION

The surface of the subbase shall conform to the lines and grades as defined on the construction plans to a tolerance of 0.05 foot. If surface exhibits plastic deformations during compaction, the existing wet material shall be removed and replaced by dry material. The method of aeration may be used if permitted by the City Engineer.

Section 9.05 TESTING

Refer to ARTICLE 15 of this Manual for testing and quality control requirements.

ARTICLE 10

SOIL CEMENT BASE

Index

10.01 DESCRIPTION
10.02 USE OF SOIL CEMENT APPROVAL
10.03 DESIGN MIX
10.04 MATERIALS
10.05 EQUIPMENT
10.06 CONSTRUCTION METHODS
10.07 OPENING TO TRAFFIC
10.08 MAINTENANCE
10.09 INSPECTION

BACK TO TABLE OF CONTENTS

Section 10.01 DESCRIPTION

The work specified in this ARTICLE shall consist of the construction of a soil cement base course composed of soil and Portland cement uniformly mixed, moistened, compacted, finished and cured in accordance with these Specifications, and shall conform to the lines, grades thicknesses and typical cross sections shown on the plans.

The base shall be designed to have a minimum in-situ strength of 350 psi. Seven day laboratory design compressive-strength shall be a minimum of 500 psi for mixed in-place and 450 psi for plant mixed.

Section 10.02 USE OF SOIL CEMENT APPROVAL

The use of soil cement is generally not permissible and shall not be used without the City Engineer's permission. The City Engineer shall only consider the use of soil cement under conditions when normal base material functions may fail due to field conditions. Additional information supporting the request for and the use of soil cement may be required.

Section 10.03 DESIGN MIX

10.03.01 Minimum Requirements

Processing of the base shall not be started until the soil cement design mix, which has been prepared by a registered Geotechnical/Soils Engineer, for the particular soil has been submitted to and approved by the City Engineer or his Designee. The following shall be the minimum items included with the mix design submittal:

A) Cement content.

B) Optimum moisture content.

C) Minimum and maximum moisture content.

D) Seven laboratory compressive strength.

E) Anticipated 7 day field compressive strength.

F) Method of application and timing (including total time from batching to completion).

G) Other information as requested.

10.03.02 Notification

Construction of the soil cement base shall not proceed without 72 hour notice to the Engineering Inspection Division of the City of Ocoee.

Section 10.04 MATERIALS

10.04.01 Portland Cement

Portland Cement shall be Type I or Type I-P and shall comply with the Standard Specifications for Portland Cement ASTM C-145. Cement which is partially set, lumpy or caked shall not be used. One cubic foot of Portland Cement shall be considered to weigh 94 lbs.

10.04.02 Water

Water shall be clean and free from substance deleterious to the hardening of the soil cement.

10.04.03 Soil

Only soils which have proven themselves to produce a high quality soil cement base shall be acceptable. New sources of soil cement material must be approved by the City Engineer prior to use.

10.04.04 Soil Cement Mix Types

Central mixed plant materials:

A) Only a central mixed material from an approved commercial source shall be acceptable for use as a base material for improvements to be dedicated to the City of Ocoee.

B) In place mixed materials shall only be an option for an Owner/Developer on private property or for improvements not being dedicated to the City. The Owner/Developer shall provide to the City a certification from the Geotechnical or Project Engineer stating that the results of all testing of the mixed in place materials are satisfactory.

Section 10.05 EQUIPMENT

Soil cement may be constructed with any machine, combination of machines or equipment that will produce the results meeting the requirements for soil pulverization, cement application, mixing, uniform depth control, water application, incorporation of materials, compaction, finishing and curing, as required by these Specifications.

Section 10.06 CONSTRUCTION METHODS

10.06.01 Responsibility

The Contractor is responsible for completing the project in accordance with plans and Specifications and with experienced competent supervision.

10.06.02 Preparation

Before construction operations are begun, the area to be paved shall be graded and shaped as required to construct the soil cement base in conformance with the grades, lines, thicknesses and typical cross section shown on the plans. Additional soil needed, if any, shall be placed as directed. Unsuitable and/or yielding soil or material shall be removed and replaced with acceptable soil.

10.06.03 Delivery of Materials

All soil cement deliveries shall be accompanied by a batch time stamped on the delivery ticket by means of a mechanical time clock. Batch time shall be an accurate time of concrete batch and delivery truck departure from the batch plant.

10.06.04 Application of Water and Moist Mixing

Immediately after and/or during the mixing of soil and cement, and before beginning the compaction, the moisture content of the soil cement mixture shall be determined by the laboratory and, if required, water shall be applied uniformly in quantities required to obtain proper moisture content. After the final application of water, mixing shall be continued until the water is distributed uniformly through the full depth of the mixture.

When water application and mixing has been completed, the percentage of moisture in the mixture and in unpulverized soil lumps, based on oven-dry weights, shall not be more than 2 percentage points above the specified optimum moisture content, and shall not be less than that quantity which will cause the soil cement mixture to become unstable during compaction and finishing.

10.06.05 Compaction

Prior to beginning of compaction, the mixture shall be in a loose condition for its full depth. The loose mixture shall then be uniformly compacted until the entire depth of the mixture is compacted to a minimum density of 98% of the maximum density in accordance with AASHTO T-180 as determined in the field on representative samples of soil cement mixture obtained from the roadway at the time compaction begins. During the compaction operations, shaping may be required to obtain the required grades and cross section. The maximum time allowed between the last moist mixing and compaction shall be 60 minutes.

10.06.06 Finishing

After the mixture has been initially compacted, the surface of the soil cement shall be shaped to the required lines, grades and cross section. During the shaping operations, the surface shall be lightly scarified to loosen any imprints left by the compacting or shaping equipment, when deemed necessary. The resulting surface shall then be compacted to the specified density with a pneumatic tire roller. Rolling shall be supplemented by broom-dragging, if required.

The moisture content of the surface material must be maintained at not less than its specified optimum moisture content during finishing operations. Surface compaction and finishing shall be done in such a manner as to produce a smooth, dense surface, free of surface compaction planes, cracks, ridges or loose material. Surface-finishing methods may be varied, provided a smooth, dense surface, free of surface compaction planes is produced. The moisture and density requirements shall be determined by the methods prescribed in AASHTO T-135.

10.06.07 Surface Requirements (Scalping or Hard-Planing)

After compaction and finishing have been completed, and not later than the beginning of the next calendar day after the construction of any section of the base, the surface shall be tested with a template cut to the required crown and/or with a 15 foot straight edge laid parallel to the centerline. All irregularities greater than ¼ inch shall be immediately corrected with a blade adjusted to the lightest cut, which will insure a surface that does not contain depressions greater than ¼ inch under the template or the straight-edge. The material removed shall be wasted. Additional wetting during and after this final shaping operation shall be required to keep the base continuously moist.

10.06.08 Prime/Curing

The curing material shall be applied immediately after the completion of finishing operations. The finished soil cement shall be kept continuously wet until the curing material is placed. After the soil cement has been finished as specified herein, it shall be protected against drying for 7 days by the application of bituminous coating.

Prime and curing materials shall conform to ARTICLE 12 of this Manual. Covering the application of bituminous materials, including but not limited to: materials, equipment, cleaning of the base, weather limitations, application of prime coat and application of tack coat.

10.06.09 Construction Joints

Prior to the beginning of each day's construction, a straight transverse construction joint shall be formed by cutting back into the completed work to form a true vertical face.

10.06.10 Thickness

During various stages of construction, test holes or trenches shall be dug in the mixture to determine the thickness. After the base is completed test holes shall be dug or cored at intervals of not more than 300 feet, or at closer intervals if necessary, and the thickness of the base shall be determined from measurements made in these test holes.

Where the base is deficient in thickness by more than ½ inch, the area of deficient base shall be removed and replaced by base of the required thickness, at the Contractor's expense. Except, at the City Engineer's discretion, such deficient base thickness may be left in place if the deficiency can be made up in asphaltic surface course.

Section 10.07 OPENING TO TRAFFIC

The Contractor shall not be permitted to drive heavy equipment over the completed sections. Light weight pneumatic-tired equipment may be permitted after the surface has hardened sufficiently to prevent the equipment from marking the surface and provided the protection and curing specified are not impaired. Completed section may be opened to light traffic after 24 hours, provided the surface has hardened sufficiently to prevent marking by traffic and has been inspected by the City Engineer or his Designee. An application of sand shall only be done prior to opening to construction traffic.

Section 10.08 MAINTENANCE

The Contractor shall maintain the base to a true and satisfactory surface until the wearing surface is constructed. Should any repairs or patching be necessary, they shall extend to the full depth of the base and shall be made in a manner that will assure restoration of a uniform base course conforming to the requirements of these Specifications. The bituminous curing coating shall be maintained until the wearing surface is constructed.

Section 10.09 INSPECTION

After a minimum of 7 days have elapsed and prior to applying the asphalt wearing surface, a detailed engineering inspection of the base shall be performed by the City Engineer or his Designee, Geotechnical/Soils Engineer, and Contractor. This inspection of the hardened soil cement base is required prior to approval for paving, to assure that the soil cement base has set-up satisfactorily and that no soft areas or surface scabs exist which may need repair. Prior to commencing paving operations, all deficiencies shall be corrected and approved by the City Engineer or his Designee.

ARTICLE 11

LIMEROCK BASE

Index

11.01 GENERAL
11.02 MATERIALS
11.03 EQUIPMENT
11.04 TRANSPORTING LIMEROCK
11.05 SPREADING LIMEROCK
11.06 COMPACTING AND FINISHING BASE
11.07 PRIME/CURING
11.08 TESTING SURFACE
11.09 TESTS
11.10 DEFICIENCIES
11.11 OPENING TO TRAFFIC
11.12 MAINTENANCE

BACK TO TABLE OF CONTENTS

Section 11.01 GENERAL

The work specified in this ARTICLE consists of the construction of a base course composed of limerock. It shall be constructed on the prepared subgrade in accordance with these Specifications and in conformity with the lines, grades, notes, and typical cross sections shown on the plans. Where so shown on the plans, the base shall be constructed in 2 courses. Where the plans do not specify double-course base, the base may be constructed in either 1 or 2 courses.

All limerock base installed within the City of Ocoee will comply with the FDOT Standard Specifications for the Road and Bridge Construction, most current edition.

Section 11.02 MATERIALS

The material used shall be obtained from a FDOT certified mine (pit).

Section 11.03 EQUIPMENT

This work may be performed with any machine, combination of machines, or equipment that will produce the specified results.

Section 11.04 TRANSPORTING LIMEROCK

The limerock shall be transported to the point where it is to be used over rock previously placed and dumped on the end of the preceding spread. In no case shall rock be dumped directly on the subgrade. The Contractor may seek relief from this requirement when the subgrade is to be adequately stabilized, as approved by the City Engineer.

Section 11.05 SPREADING LIMEROCK

The limerock shall be spread uniformly. All segregated areas of fine or coarse rock shall be removed and replaced with well-graded rock.

For double-course base, the rock shall be spread in 2 courses, and the thickness of the first course shall be approximately ½ the total thickness of the finished base, or enough additional to bear the weight of the construction equipment without disturbing the subgrade.

Section 11.06 COMPACTING AND FINISHING BASE

For double course base, the first course shall be bladed if necessary to secure a uniform surface, and shall be compacted to the density specified below, immediately prior to spreading the second course. No other finishing of this course is required.

After spreading is completed, the entire surface shall be scarified and shaped so as to produce the exact grade and cross section after compaction. For double course bases, this scarifying shall extend to a depth sufficient to penetrate slightly the surface of the first course.

Proper moisture condition shall be maintained uniformly throughout the material during the compaction operation. The material shall be compacted to a minimum density of 98% of the maximum density obtainable under AASHTO T-180. Where the base is being constructed in one course and the specified thickness is more than 6 inches, the density specified above shall be obtained in both the bottom half and top half of the base. During final compacting operations, if blading of any areas is necessary to obtain the true grade and cross section, the compacting operations for such areas shall be completed prior to making the density determinations on the finished base.

The surface shall be "hard-planed" with a grader immediately prior to the application of the prime coat to remove the thin-glazed or cemented surface, leaving a granular or porous condition that will allow free penetration of the prime material. The materials planed from the base shall be removed from the base area.

If, at any time, the subgrade material should become mixed with the base course material, the Contractor, at their cost shall excavate and remove the mixture, reshape and compact the subgrade, and replace the materials removed with clean base material, which shall be shaped and compacted as specified above.

Section 11.07 PRIME/CURING

Once limerock has been finished as specified herein, it shall be protected by the application of a bituminous coating. The bituminous material shall be applied as soon as possible after the completion of finishing operations. The Prime/Curing material shall be in accordance with ARTICLE 12 of this Manual.

Section 11.08 TESTING SURFACE

The finished surface of the base course shall be checked with a template cut to the required cross section and with a 15 foot straight edge laid parallel to the centerline of the road or other approved testing devices. All irregularities greater than ±¼ inch shall be corrected by scarifying and removing or adding rock, as may be required, after which the entire areas shall be re-compacted as specified herein. All corrective material and rework is at the contractor's expense.

Section 11.09 TESTS

Testing shall be done in accordance with ARTICLE 15 of this Manual.

Section 11.10 DEFICIENCIES

If deficiencies in the density occur, the base shall be reworked and re-compacted until the density tests conform to these Specifications. All work to repair said deficiencies will be at the contractor's expense.

Any deficiencies in thickness of base greater than ½ inch shall require that the entire base be reworked to conform to the original line and grade and specifications as shown on the original plans. Except, at the City Engineer's discretion, such deficient base thickness may be left in place if the deficiency can be made up in asphaltic surface course.

Section 11.11 OPENING TO TRAFFIC

The Contractor shall not be permitted to drive heavy equipment over the completed sections. Light weight pneumatic-tired equipment may be permitted after the surface has hardened sufficiently to prevent the equipment from marking the surface and provided the protection and curing specified are not impaired. Completed section may be opened to light traffic after 24 hours, provided the surface has hardened sufficiently to prevent marking by traffic and has been inspected by the City Engineer or his Designee. An application of sand shall only be done prior to opening to construction traffic.

Section 11.12 MAINTENANCE

The Contractor shall maintain the base to a true and satisfactory surface until the wearing surface is constructed. Should any repairs or patching be necessary, they shall extend to the full depth of the base and shall be made in a manner that will assure restoration of a uniform base course conforming to the requirements of these Specifications. The bituminous curing coating shall be maintained until the wearing surface is constructed.

ARTICLE 12

PRIME AND TACK COATS FOR BASE COURSES

Index

12.01 GENERAL
12.02 MATERIALS
12.03 EQUIPMENT
12.04 CLEANING THE BASE
12.05 WEATHER LIMITATIONS
12.06 APPLICATION OF PRIME COAT
12.07 APPLICATION OF TACK COAT

BACK TO TABLE OF CONTENTS

Section 12.01 GENERAL

The work specified in this ARTICLE consists of the application of bituminous material, on a previously prepared base, in accordance with these Specifications and in conformity with the lines, grades, dimensions, and notes shown on the plans.

All prime and tack coats installed will comply with the FDOT Standard Specifications for the Road and Bridge Construction, most current edition.

Section 12.02 MATERIALS

The materials used shall be as follows:

12.02.01 Prime Coat

A) Cutback Asphalt, Grade RC-SS-1, SS-1H, Special MS-Emulsion, diluted at the ratio of 6 parts emulsified asphalt to 4 parts water.

B) Cutback Asphalt, Grade RC-70.

12.02.02 Tack Coat

A) Asphalt Cement, Viscosity Grades AC-20 or AC-30.

B) Emulsified Asphalt, Grade RS-2, SS-1, SS-1H, Special MS-Emulsion, diluted at the ratio of 6 parts emulsified asphalt to 4 parts water.

For the prime and tack coat, any one of the specified bituminous materials may be used at the option of the Contractor, unless a specific type and grade is called for on the plans.

Section 12.03 EQUIPMENT

This work may be performed with any machine, combination of machines, or equipment that will produce the specified results.

Section 12.04 CLEANING THE BASE

Before any bituminous material is applied, all loose material, dust, and foreign material, which might prevent proper bond with existing surface, shall be removed for the full width of the application. Particular care shall be taken to clean the outer edges of the strip to be treated in order to insure that the prime or tack coat will adhere. Where the prime or tack coat is applied adjacent to curb and gutter or valley gutter, such concrete surfaces are to be protected and kept free of bituminous materials.

Section 12.05 WEATHER LIMITATIONS

No bituminous material shall be applied when the temperature of the air is less than 40° F in the shade, or when the weather conditions or the condition of the existing surface is unsuitable.

Section 12.06 APPLICATION OF PRIME COAT

The surface to be primed shall be clean and free of standing water. For limerock bases the glazed finish shall be removed, leaving a granular or porous condition that will allow free penetration of bituminous material. The temperature of the prime material shall be between 100° F and 150° F. The actual temperature shall be that which will insure uniform distribution. The material shall be applied by means of a pressure distributor. The amount of bituminous material applied shall be not less than 0.10 gallon per square yard for limerock base and not less than 0.15 gallon per square yard for soil cement, or shell base. The amount to be applied will be dependent on the character of the surface and shall be sufficient to coat the surface thoroughly and uniformly, with no excess. Where asphaltic pavement abuts concrete curbing, the vertical abutting edge shall receive a uniform coating of tack applied so as to avoid puddles, etc.

A light uniform application of clean sand shall be applied prior to opening the primed base to traffic, in which case the sand shall be rolled with a traffic roller. If warranted by traffic conditions, the application shall be made only on one-half of the width of the base at one time, care being taken to secure the correct amount of bituminous materials at the joint.

The base shall be sufficiently moist in order to obtain maximum penetration of the asphalt.

Section 12.07 APPLICATION OF TACK COAT

Where a bituminous surface is to be laid and a tack coat is required, it shall be applied as herein specified. On newly constructed base courses, the application of the tack coat, when required, shall follow the application of the prime coat, immediately prior to placing the wearing surface. In general, a tack coat shall not be required on primed bases, except in areas which have become excessively dirty and cannot be cleaned, where the prime has cured and lost bonding effect, or where the prime coat has worn away. The tack coat shall be applied with a pressure distributor. The bituminous material shall be heated to a suitable consistency as designed or as stated in Section 11.06. The bituminous material shall be applied at the rate between 0.02 gallon and 0.08 gallon per square yard. The tack coat shall be applied sufficiently in advance of the laying of the wearing surface to permit drying, but shall not be applied so far in advance or over such an area as to lose its adhesiveness as a result of being covered with dust or other foreign material and shall be kept free from traffic until the wearing surface is laid.

ARTICLE 13

ASPHALTIC CONCRETE SURFACE COURSE

Index

13.01 GENERAL
13.02 ASPHALTIC CONCRETE MIXES
13.03 MECHANICAL SPREADING and SCREEDING EQUIPMENT
13.04 CONSTRUCTION METHODS
13.05 FINISHED SURFACE REQUIREMENTS
13.06 SUBMITTALS

BACK TO TABLE OF CONTENTS

Section 13.01 GENERAL

The work specified in this ARTICLE consists of the application of asphaltic concrete surface course. This course shall be composed of a mixture of aggregates and, if necessary, mineral filler and asphalt cement to produce the desired stability as hereinafter described, properly laid upon a prepared base in accordance with these Specifications and in conformity with the lines, grade, thickness and typical cross section shown on the plans. This work shall include the conditioning of the existing surface or base. Skid resistant surfaces shall be installed as required by the City Engineer.

All asphalt pavement installed will comply with the FDOT Standard Specifications for the Road and Bridge Construction, most current edition.

Section 13.02 ASPHALTIC CONCRETE MIXES

All thicknesses mentioned in these Specifications and/or shown on the project Drawing shall be an average thickness computed as follows:

The minimum thickness allowed shall be ¼ inch less than the required average thickness. Thickness in excess of ¼ inch of the required average thickness shall be computed at the design thickness plus ¼ inch in computing the average thickness.

The thickness of the pavement shall be determined from the length of core, at least 2 inches in diameter, taken at random points on the cross section and along the roadway. Each core shall represent a section not longer than 250 feet. The average thickness shall be determined from the measured thicknesses.

If the Contractor believes that the number of cores taken is insufficient to properly indicate the thickness of the pavement, additional cores can be requested at locations designated by the Contractor. These and any additional costs shall be born by the Contractor.

When the deficiency in thickness is in excess of ¼ inch, the Contractor shall correct the deficiency either by replacing the full thickness for a length extending at least 50 feet from each end of the deficient area, or (when permitted by the City Engineer or his Designee) by overlaying. Normally an overlay shall not be permitted in a concrete curb section.

Asphaltic concrete mixes shall meet the following Specifications when called for in the plans and specifications:

Table 13-1				
Type	Job Mix Specification	Min/Avg Compacted (Max Lift)	Minimum Marshall Stability	Application
Type S-1 (S-I)	*	1 ¼ " 2 ½ "	1,500 lb	Wearing Course
Type S-2 (S-II)	*	2" 2 ¾ "	1,000 lb	Wearing Course
Type S-3 (S-III)	*	¾ " 1 ½"	1,500 lb	Wearing Course
Type FC-5	Current FDOT Specification	(¾"")	N/A	Friction Course
Type FC-9.5	*	Refer to FDOT Specification	N/A	Friction Course
Type FC-12.5	*	Refer to FDOT Specification	N/A	Friction Course
Type SP-9.5	Current FDOT Specification	1" 1 ½ "	N/A	Structural Course
Type SP-12.5	Current FDOT Specification	1 ½ " 2 ½ "	N/A	Structural Course
Type SP-19	Current FDOT Specification	2" 3"	N/A	Structural Course

* http://www.dot.state.fl.us/specificationsoffice/Implemented/LAP/Archives/Asphalt/Default.shtm

Section 13.03 MECHANICAL SPREADING and SCREEDING EQUIPMENT

Bituminous pavers shall be self-contained, self-propelled and steerable. It shall be equipped with a receiving and disbursing hopper capable of holding a minimum quantity of 5 cubic yards of bituminous plant mix material permitting a uniform spreading operation. The hopper shall be equipped with a conveyor distribution system to place the mixture uniformly in front of the screed.

The paver shall also be equipped with a heated mechanical screed or strike-off assembly. The screed or strike-off shall be capable of adjustment to regulate the depth of material spread and shall produce a finished surface of the required evenness and texture, without tearing, shoving, or gouging the mixture.

Section 13.04 CONSTRUCTION METHODS

The mixture shall be spread on the designated surface only when the surface previously prepared is intact, firm, properly cured and dried, and only when the air temperature in the shade and away from artificial heat is above 40° F and rising.

The mixture shall be delivered on the road in ample time to permit the spreading, rolling and surface testing during daylight hours. The temperature of the mixture at the time of spreading shall be between 260° and 310° F and shall not exceed 340° F at the plant.

Material shall be delivered to the job site with sufficient frequency that the paving operation can continue without interruption.

Depressions which may develop after the initial rolling shall be remedied by removing the mixture laid and adding new material to bring such depressions to a true surface. Such portions of the completed course that are defective in surface planeness, compaction or composition, or that do not comply with the requirements of these Specifications shall be removed and replaced with suitable mixture properly laid in accordance with these Specifications.

Vertical construction joints shall be constructed prior to the commencement of the ongoing paving operation. All cold joints shall be prepared according to the FDOT Specifications. The vertical surface of all existing asphaltic concrete mixes, at cold joints, shall be mopped with an approved liquid bitumen material so as to provide a water-tight joint at the interface of the two mixes.

Section 13.05 FINISHED SURFACE REQUIREMENTS

For the purpose of testing the finished surface, the Contractor shall provide a 15 foot rolling straight edge (to include a recent certification of calibration) and standard template cut to the true cross section of the road. These shall be available at all times during construction so that the City may check the finished surface. The Contractor shall provide and designate an employee whose duty it is to use the straight edge and template in checking all rolled surface under the direction of the City. Vertical measurement from a string line between curbs, to determined crown, may be accepted as an alternate. The finished surface shall be such that it will not vary more than ¼ inch from the 15 foot rolling straight edge applied parallel to the centerline of the pavement and shall be of uniform texture and compaction. The lip of the asphalt shall be higher than the gutter by ¼ to ½ inch. The surface shall have no pulled, torn or loosened portions and shall be free from segregation, sand streaks, sand spots, or ripples. Irregularities of the surface, exceeding the above requirements, shall be corrected by the Contractor who has the option of selecting one of the following methods:

A) Removing and Replacing - If correction is made by removing and replacing the pavement, the removal must be for the full depth of the course and extend at least 50 feet on either side of the defective area, for the full width of the paving lane.

B) Overlaying - If correction is made by overlaying, the overlay shall cover the length of the defective area and taper uniformly to a feather edge thickness at a minimum distance of 50 feet on either side of the defective area. The overlay shall extend full width of the roadway. Care shall be taken to maintain the specified cross slope. The mix used for the overlay may be adjusted as necessary for this purpose by the City Engineer. Overlaying shall not be permitted when the finished pavement surface is a friction course or abuts concrete curbs.

C) Other Methods - For courses which will not be the final pavement surface, correction of minor straightedge deficiencies by methods other than specified above may be approved by the City Engineer.

The City Engineer or his Designee may require in-laid type pavement markings or alkyd thermoplastic pavement markings at the time of the final course application.

Section 13.06 SUBMITTALS

Prior to the start of the placing of the asphaltic concrete, the job mix formula prepared by a certified material testing laboratory shall be submitted to and be approved by the City Engineer or his Designee. All job mix design formulas shall be current within the last 12 months.

The following items may be required by the City Engineer or his Designee:

A) Plant inspection and calibration check.

B) Aggregate verification.

C) Temperature control and verification.

ARTICLE 14

PORTLAND CEMENT CONCRETE PAVEMENT

Index

14.01 GENERAL
14.02 SUBGRADE PREPARATION FOR RIGID PAVEMENT
14.03 MATERIALS, PROPORTIONING AND CONSTRUCTION FOR RIGID PAVEMENTS
14.04 EQUIPMENT
14.05 MIXING AND PLACING FOR RIGID PAVEMENT
14.06 FINISHING
14.07 CURING FOR RIGID PAVEMENTS
14.08 JOINTS IN RIGID PAVEMENTS
14.09 FINAL ACCEPTANCE FOR RIGID PAVEMENTS

BACK TO TABLE OF CONTENTS

Section 14.01 GENERAL

Rigid pavement consists of constructing a specified Portland Cement Concrete Paving on a prepared subgrade. The utilities and other items in and beneath the street must be properly coordinated with the construction of rigid pavement to avoid all conflicts. The work to be done shall include the furnishing of all supervision, labor, materials, equipment and incidentals necessary for the proposed rigid pavement construction in accordance with the approved Drawings and specifications.

All rigid pavement installed will comply with the FDOT Standard Specifications for the Road and Bridge Construction, most current edition.

Section 14.02 SUBGRADE PREPARATION FOR RIGID PAVEMENT

14.02.01 General

The bottom of the excavation for the pavement or top of the earth fill will be known as the pavement subgrade and shall conform to the lines, grade and cross sections shown on the plans.

Prior to placing the concrete, the subgrade shall be tested for conformity with the cross section shown on the plans. If necessary, material shall be removed or added as required to bring all portions of the subgrade to the correct elevation. Concrete shall not be placed on any portion of the subgrade which has not been tested for correct elevation. The subgrade shall be cleared of all debris, including tree roots, stumps, and loose material. If at any time trucks, construction equipment or slip forming machines cause rutting or displacement of the subgrade materials, the subgrade shall be reshaped and compacted. The subgrade shall be in a moist condition at the time the concrete is placed.

14.02.02 Subgrade Material

The top 6 inches shall be composed of well drained granular soils that are predominantly sandy, mixed with no more silt or clay than required to obtain a Florida bearing value of 50 plus or minus 5 and be compacted to a minimum density of 98% of maximum density in accordance with AASHTO T-180.

Section 14.03 MATERIALS, PROPORTIONING AND CONSTRUCTION FOR RIGID PAVEMENTS

The materials and proportioning shall be in accordance with ACI Standard 318, latest edition. All construction procedures shall be in accordance with FDOT Standard Specifications for Road and Bridge Construction, latest edition.

14.03.01 Strength Required

All concrete shall have a minimum compressive strength of 3,000 psi at 28 days. Conformance to strength requirements shall be determined by ACI Standard 318, latest edition.

14.03.02 Slump

The mixture shall contain no more water than is necessary to produce concrete which is workable and plastic. The minimum slump necessary to place the concrete satisfactorily shall be used. Slumps shall be maintained so as not to exceed 4½ inches for non-vibrated placement nor to exceed 5 inches for vibrated placement.

The design mix shall be submitted to the City Engineer and Construction Manager for approval prior to paving.

Section 14.04 EQUIPMENT

14.04.01 Forms

The pavement shall be placed to lines and grades established by the Engineer. The edges of pavement shall be vertical to the subgrade and forms shall be sufficient to support mechanical equipment.

14.04.02 Ready Mixed Plants

The plant shall be in accordance with the FDOT Standard Specifications for Road and Bridge Construction, latest edition. All plants must be DOT certified or approved by the City Engineer.

14.04.03 On-Site Central Mix Plants

The plant shall be in accordance with the FDOT Standard Specifications for Road and Bridge Construction, latest edition. The trucks used to transport the concrete shall be so constructed to prohibit segregation of the mix. All plants must be DOT certified or approved by the City Engineer.

14.04.04 Paver

All equipment used in the placement of concrete pavements shall conform to FDOT Standard Specifications for Road and Bridge Construction, latest edition.

Section 14.05 MIXING AND PLACING FOR RIGID PAVEMENT

14.05.01 General

Concrete pavement shall be constructed on the prepared subgrade in accordance with these Regulations and in conformity with the lines, grades, thickness, and typical cross sections shown on the construction plans. Concrete pavement shall meet the following Minimum thickness requirements.

Table 14-1

Minimum Type of Development	Roadway Classification	Concrete Thickness
Residential	Marginal Access and Parking Areas	6"
	Local Street	8"
	Minor Collector Street	8"
	Major Collector Street	8"
Industrial and Commercial	Marginal Access and Parking Areas	6"
	Minor Street	8"
	Collector Street	8"

14.05.02 Transporting Concrete

Concrete may be transported any distance providing it is discharged on the grade with the slump within the required slump range and meets concrete time limit requirements. If additional water is required to maintain the specified slump of concrete transported in the truck mixers, it may be added with the permission of the City Engineer or his Designee. In this case, a minimum of 25 additional revolutions of the mixer drum at designed mixing speed shall be required before discharging of the concrete. All concrete deliveries shall be accompanied by a batch time stamped on the delivery ticket by means of a mechanical time clock. Batch time shall be an accurate time of concrete batch and delivery truck departure from the batch plant.

14.05.03 Concrete Time Limit

The length of time that the concrete can be held in the truck shall conform to the following:

A) Air temperature 45°F to 80°F, 90 minutes.

B) Air temperature over 80°F with a retarder added to the mix, 90 minutes maximum.

C) Air temperature over 80°F without a retarder added to the mix, 60 minutes maximum.

D) The maximum temperature of the concrete at the time of placing shall be 95°F.

14.05.04 Placing Concrete

The concrete shall be deposited on the grade in such a manner as to require as little re-handling as possible. It shall be deposited in successive batches in a continuous operation. The concrete shall be consolidated by suitable means so as to preclude the formation of voids or honeycomb pockets.

14.05.05 Placing in Cold Weather

Concrete shall only be placed when the temperature is at least 40°F and rising. Any concrete damaged by frost action shall be removed and replaced.

Section 14.06 FINISHING

14.06.01 General

The concrete shall be struck-off, consolidated, and finished with mechanical equipment in such a manner that after final finishing, it shall conform to the pavement cross section shown on the construction plans. Hand finishing shall be permitted in narrow widths, in areas of irregular dimensions, or in the event of breakdown of the mechanical equipment, only to finish the concrete already deposited on the grade.

14.06.02 Final Surface Finish

The final surface of the pavement shall have uniform, skid-resistant texture. The method of texturing shall be approved by the City Engineer or his Designee and may require change in the final finishing procedure as required to produce the desired final surface texture. A burlap drag or transverse broom finish is recommended for local and collector streets. Arterial and rural roads may require an overlapping stiff bristled brook or steel comb finish at the discretion of the City Engineer or his Designee.

14.06.03 Pavement Exposed to Rain During Construction

The Contractor shall always have materials available to protect the surface of the plastic concrete against rain. Areas of the pavement surface that exhibit a smooth, sandy appearance after the rain ceases shall be textured before applying the membrane curing materials. Areas that have suffered surface erosion and have coarse aggregate exposed, and have not yet hardened, shall be reworked by hand methods or with the finishing machine when the form paving method is used. Fresh concrete containing the same materials and properties as the pavement concrete shall be added to maintain an adequate supply in front of the screeds or machine to assure replacement of the concrete eroded from the surface. The surface shall then be textured and cured as specified.

If pavement edges have been severely eroded and the concrete has not set, the edges shall be repaired by setting side forms and replacing eroded concrete. After the side forms are set, fresh concrete shall be placed and finished prior to texturing and curing. After the pavement has hardened, remedial work shall not be permitted until after the curing period has terminated.

Section 14.07 CURING FOR RIGID PAVEMENTS

14.07.01 General

After finishing operations have been completed and immediately after the free water has left the surface, the surface of the slab and the sides of the slab, for slip formed pavement, shall be coated and sealed with a uniform layer of membrane curing compound. The curing compound shall be applied at the rate of not less than 1 gallon per 200 square feet of surface. When the forms are removed, curing compound shall be applied to the sides of the slab. Areas in which the curing membrane is damaged shall be re-sprayed with curing compound within a period of 3 days.

Curing compound may be omitted when, in conjunction with protection of pavement from inclement weather, a polyethylene film or other acceptable material is applied over the pavement and maintained intact for 3 days.

14.07.02 Cracks

Concrete rigid pavement shall not be accepted with excessive uncontrolled cracks. Shrinkage cracks must be avoided.

Uncontrolled cracks 1/16 inch or larger in width shall be repaired. One of the following repair methods shall be used:

A) Remove and Replacement.

B) Widen with power router and fill with an approved joint sealant.

C) Epoxy grout injection.

The City Engineer or his Designee shall determine which cracks are to be repaired and the method to be used.

Section 14.08 JOINTS IN RIGID PAVEMENTS

14.08.01 General

Transverse and longitudinal joints shall be constructed to a maximum spacing of 15 feet. Transverse joints shall extend the entire width of the pavement and through the curbs.

Sawing of joints shall begin 4 to 6 hours after placing concrete or as soon as the concrete has hardened sufficiently to permit sawing without excessive raveling and before uncontrolled cracking occurs. If necessary, the sawing operations shall be carried on both day and night, regardless of weather conditions.

14.08.02 Construction Joints

Longitudinal joints may be construction joints at the discretion of the City Engineer or his Designee. Transverse construction joints shall be installed whenever the placing of concrete is suspended a sufficient length of time for the concrete to begin to harden.

14.08.03 Joint Sealing

Joints shall be sealed, if required, before the pavement is exposed to traffic, including construction traffic. Prior to sealing, all foreign material shall be removed from the joints and the joints shall be thoroughly dry.

Section 14.09 FINAL ACCEPTANCE FOR RIGID PAVEMENTS

14.09.01 General Acceptance for Rigid Pavements

Before the pavement shall be considered for acceptance, all items shall be complete in accordance with the construction plans and these Regulations. Equipment, surplus materials, and construction debris shall be removed from the project.

14.09.02 Opening to Traffic

The pavement shall be closed to traffic after the concrete is placed until it reaches a compressive strength of 3,000 psi under ordinary field conditions. This does not include the sawing and sealing equipment or other light miscellaneous equipment. New roadways shall be closed to public traffic until approved by the City Engineer or his Designee.

14.09.03 Testing of Concrete

Concrete pavement shall have a 28-day compressive strength of 3,000 psi. Portland Cement Concrete control for slump testing, and concrete cylinder samples and testing is required and shall be in accordance with AASHTO and ASTM Specifications, latest editions. Test reports shall be submitted to the City Engineer or his Designee by the Engineer of Record for review of all non-public improvements. All tests on public improvements shall be conducted by a Geotechnical/Soils Engineer under contract to the City. Final acceptance shall be based on testing in accordance with other paving requirements. Failed tests or additional tests are at Contractor's expense.

ARTICLE 15

QUALITY CONTROL

Index

15.01 GENERAL
15.02 INSPECTIONS AND TESTS

BACK TO TABLE OF CONTENTS

Section 15.01 GENERAL

Developments within the City of Ocoee which have improvements to be dedicated (property, utilities, and rights-of-way) or granted (easements) to the City shall require quality control assurances. The cost for these assurances shall be three (3) percent of the total construction cost of the dedicated and/or granted improvements. This is part of the requirements of a Right-of-Way Utilization Permit.

Section 15.02 INSPECTIONS AND TESTS

Staged inspections during construction are required. It is the responsibility of the Owner/Developer, or their Contractor, to notify the City Engineer or their Designee to arrange for these inspections. All tests shall be the responsibility of the Owner/Developer unless otherwise stated in the following paragraph.

Tests which are required under this Manual shall be performed by a competent engineering testing laboratory. This laboratory shall have an Engineer registered in Florida as one of the responsible officials of the firm. All tests on facilities to be dedicated to the public shall be performed by a City contracted or approved engineering firm. All such materials testing costs shall be paid for by the Owner/Developer. In accordance with City Policy, the Contractor shall reimburse the City for any extra costs incurred due to the retesting of failing portions of the project to be dedicated to the public. During construction and upon completion of the following construction stages, the Developer/Contractor shall notify the City that each stage is ready for inspection, and will await clearance by the City Engineer or their Designee before proceeding to the next stage:

A) Work zone traffic control.

B) Clearing and grubbing.

C) Utility systems (sanitary sewer facilities only).

D) Storm water facilities.

E) Removal of unsuitable material.

F) Stabilization of subgrade.

G) Underdrains.

H) Curb and gutter (including backfill behind curbing).

I) Inlets, box culverts, and all other concrete structures when steel is in place prior to pouring.

J) All underground utilities within right-of-way, including but not limited to water, wastewater, irrigation, electric, street lighting wiring and bases, cable television, telephones, gas, etc. shall be in place and an inspection approval on file with the Construction Manager prior to proceeding.

K) Base course during construction or mixing.

L) Traffic Signal Systems.

M) Finishing base course prior to paving.

N) Wearing surface during application.

O) Sidewalks, driveway approach, dumpster pads, and other reinforced structures (pre-pour).

P) Sodding and/or landscaping.

Q) Cleanup and dressing of right-of-way limits.

R) Pavement marking and traffic control signage.

S) Street name signs.

T) Final inspection.

The City requires a 24-hour notice of said scheduled inspections. The purpose of these inspections is to ensure compliance with the approved development plan and to advise the City whether or not the roads, traffic controls, storm drainage, utilities, and other required improvements being constructed appear to qualify for acceptance by the City. The City accepts no responsibility or liability for the work, or for any contractual conditions involving acceptance, payment, or guarantees between the Contractor and the Developer, by virtue of these stage inspections. The City assumes no responsibility or commitment guaranteeing acceptance of the work, or for subsequent failure, by virtue of these stage inspections. However, if any aspect of the work being performed does not comply with acceptable standards, corrections will be required by the City as a condition for City acceptance. All required improvements shall be installed and have the approval of the City prior to acceptance by the City.

Inspection of Private Facilities

Inspections and verifications of private streets and drainage facilities in approved developments shall be conducted by the City to verify that they are being constructed in accordance with the approved plans for the project.

ARTICLE 16

CULVERTS AND STORM SEWERS

Index

16.01 GENERAL
16.02 PIPE
16.03 LAYING PIPE
16.04 BACKFILLING
16.05 PIPE FOUNDATIONS
16.06 TESTS

BACK TO TABLE OF CONTENTS

Section 16.01 GENERAL

The work in this ARTICLE shall consist of furnishing and installing culverts and storm sewers with appurtenances in conformance with the Specifications hereafter described and of the sizes and dimensions shown on the plans. Storm sewer pumping stations shall in general conform to the Specifications for sanitary sewer lift stations. All products shall be FDOT approved materials.

Section 16.02 PIPE

16.02.01 Concrete Pipe

Concrete pipe shall be of first quality, conforming to the most current ASTM Designation C-76. Pipe requirements shall be shown on the plans. Class III reinforced concrete pipe is the minimum acceptable classification. Lifting holes are prohibited.

The joints shall have a continuous O-ring rubber gasket, or approved equal, which fits snugly in the annular space between the beveled surfaces of the tongue and groove ends of the pipe to form a flexible watertight joint under all conditions of service. There shall be no exposed metal in the joint, except that allowed by ASTM and FDOT for "chairs". All concrete pipe joints shall be wrapped with filter fabric. Filter fabric shall conform to ARTICLE 18 of this Manual. Filter material shall extend a minimum of 1 foot both sides of the joint and a 2 foot overlap on the top. All joints shall prevent soil from infiltration into the pipe.

16.02.02 Alternative Material Pipes

Alternative pipe materials may be allowed upon the submittal by the Project Engineer and approval by the City Engineer.

Section 16.03 LAYING PIPE

All pipe shall be carefully laid, true to the lines and grades as shown on the plans. For pipe laid with rubber gasket joints, any deviation from true alignment or grade, which would result in a displacement from the normal position of the gasket of as much as ¼ inch, or which would produce a gap exceeding ½ inch between sections of pipe for more than 25% of the circumference of the inside of the pipe, shall not be acceptable. If this occurs the pipe shall be removed and re-laid. Where minor imperfections in the manufacture of the pipe cause a gap greater than ½ inch between pipe sections, the joint will be acceptable provided the gap does not extend more than 25% of the circumference of the inside of the pipe. No mortar, joint compound, or other filler which would tend to restrict the flexibility of the gasket joint shall be applied to the gap. All pipe shall be laid "in-the-dry" unless specifically authorized otherwise by the City Engineer.

Section 16.04 BACKFILLING

Backfilling shall progress as rapidly as the construction and testing of the work will permit. All backfill material shall be suitable and free of deleterious material. The initial backfill shall be carefully deposited on both sides of the pipe at the same time and uniformly compacted around the barrel of the pipe until enough has been placed to provide a cover of 1 foot above the crown of the pipe. In no case shall backfill material be placed in the trench in a manner that will cause shock to or unequal pressure on the pipe. The backfill shall be placed and compacted to a minimum density of 98% of the maximum density value as determined by AASHTO T-180. Under no conditions shall construction debris, concrete, etc., be included with the backfill. All backfill in existing pavement areas shall be non-shrinkable fill unless this requirement is waived by the City Engineer.

Section 16.05 PIPE FOUNDATIONS

Where the nature of the foundation materials is of poor supporting value, the foundation material shall be consolidated by mechanical methods, replaced with sand or other material by constructing supporting cradles, or as approved by the City Engineer or his Designee.

Section 16.06 TESTS

Compaction tests shall be required for the first lift around the pipe and one test for each 1 foot lift above that to the subgrade for each 200 linear feet of pipe as a minimum. The City Engineer or his Designee may determine that more or fewer tests are required to certify the installation depending on the field conditions.

ARTICLE 17

INLETS AND MANHOLES

Index

17.01 GENERAL
17.02 MATERIALS
17.03 FOUNDATIONS
17.04 FORMS
17.05 PLACING AND CURING CONCRETE
17.06 MASONRY CONSTRUCTION
17.07 PRECAST INLETS AND MANHOLES
17.08 PLACING PIPE
17.09 FLOW CHANNELS
17.10 INLET PLACEMENT
17.11 MANHOLE COVERS AND RINGS
17.12 DIAMETER
17.13 ACCESS

BACK TO TABLE OF CONTENTS

Section 17.01 GENERAL

The work specified in this ARTICLE shall consist of constructing inlets and manholes. These structures shall be constructed of Portland cement concrete and reinforcing steel with the necessary metal frames and gratings. They shall be constructed in conformity with the detailed plans and in accordance with this Manual and FDOT Standard Specifications. Stormwater and sewer facilities shall be in accordance with this Manual.

Section 17.02 MATERIALS

Concrete shall be Class I (Class II for sanitary sewer) and have a minimum compressive strength of 4,000 psi at 28 days. The mortar for masonry shall be of Portland cement and sand mixed in the proportions of 1 part cement to 3 parts of sand. At the option of the Contractor, high early strength cement may be used. All items shall be wet cast. Dry casting or low slump concrete shall not be allowed. There shall be no penetrating lifting holes on any structures, and no holes will be allowed within 6 inches of any joint on structures. Brick manholes shall not be permitted.

Section 17.03 FOUNDATIONS

Compaction shall be to a minimum density of 98% of the maximum density determined by AASHTO T-180 for 12 inches, then stabilized using a 9 inch layer of crushed rock in a filter fabric envelope.

Section 17.04 FORMS

Forms shall be built true to line and grade, braced in a substantial and unyielding manner and so designed and constructed that they may be removed without injury to the concrete.

Section 17.05 PLACING AND CURING CONCRETE

The concrete shall be placed in the forms to the depth shown on the plans and thoroughly tamped and spaded. After the concrete has hardened sufficiently, it shall be covered with suitable material and kept moist for a period of 3 days or longer, if necessary, and shall be protected in a satisfactory manner from the elements until thoroughly cured.

Section 17.06 MASONRY CONSTRUCTION

Masonry construction shall be limited to completion of doghouses around pipes, adjusting manhole covers, etc., or as approved by the City Engineer. It is the intent of this Manual that structures be constructed of precast concrete or cast in place concrete. All clay brick used shall be solid and conform to the current ASTM Designation C-55 Grade P-11.

Section 17.07 PRECAST INLETS AND MANHOLES

Precast manholes, inlets and junction boxes shall be in accordance with ASTM C-478. Top elevation adjustment of the manhole top shall be adjustable between 6 inches and 12 inches using precast concrete rings or cast in-place concrete, minimum compressive strength of 3,000 psi. No brick will be accepted for the main structure. Vertical walls of manhole entrances shall not exceed 19 inches in length including the ring and cover.

Section 17.08 PLACING PIPE

The inlet and outlet pipes shall be flush with the inside face of the wall. Mortar bonding shall be required between pipe and structure wall. Concrete to PVC adapters shall be required when PVC pipes are connected to concrete structures.

Section 17.09 FLOW CHANNELS

Flow channel to be precast in place or cast in-place concrete, minimum compressive strength of 3,000 psi. Fillers of any other material will not be accepted. A flow channel shall be formed in the invert of all inlets, manholes and junction boxes and shall extend to the spring line of the pipe. The flow channel through manholes shall be made to conform in shape and slope to the lower 0.8 diameter of the inlets and outlets. Flow direction changes in excess of 90” shall not be included in sewer alignments without special consideration. When directional changes exceeding 45” occur, an additional flow line elevation drop of 0.1 foot across manholes shall be provided. Straight-through channels may be formed with pre-cut half pipes. Benching shall be provided with a minimum slope of 2 inches per foot.

In general, manhole drop connections are not allowed. The City may allow such connections on a case by case basis. These connections shall only be considered when other alternatives are not feasible. If allowed, an outside drop pipe shall be provided for a sewer entering a manhole where its invert elevation is 24 inches or more above the manhole invert. Where the difference in elevation between the incoming sewer invert and the manhole invert is less than 24 inches, the manhole invert shall be filleted to prevent solids deposition.

Section 17.10 INLET PLACEMENT

Radial inlets are prohibited. All inlets must be placed on tangents.

Section 17.11 MANHOLE COVERS AND RINGS

Covers and rings for manholes shall conform to the Approved Manufacturers List for Model Numbers. The cover shall have the wording "City of Ocoee", "Florida" and either "STORM" or "SANITARY" based on application cast into the face as specified in the Typical City Details.

All manhole rings and covers shall be made watertight by means of dovetail grooves and gaskets in the cover. Bolt down and/or gasketed covers shall be provided where manholes are located in areas subject to ponding or flooding. Frames and covers shall be set to conform to the finished grades. All frames shall be set securely in a cement mortar bed and fillet. All covers shall be made flush with existing permanent surfaces except outside the limits of the traveled ways where they shall be set approximately 0.2 feet above the existing ground unless otherwise noted.

Covers and rings for storm inlets with cast in-top ring shall conform to the Approved Manufacturers List for Model Numbers.

Section 17.12 DIAMETER

For pipe sizes 24 inches in diameter and smaller, the minimum inside diameter of manholes shall be 48 inches. For pipe sizes between 24 and 36 inches, the minimum inside diameter shall be 60 inches. For pipe sizes larger than 36 inches in diameter, a 72 inch inside diameter manhole shall be provided

Section 17.13 ACCESS

A 10 foot wide access road and minimum 20 foot easement shall be provided for all structures to be dedicated to the public which are located outside of City roadways. The top 8 inches of the access road shall be stabilized to FBV 50, and compacted to a minimum density of 98% of the maximum density as determined by AASHTO T-180.

ARTICLE 18

UNDERDRAINS

Index

18.01 GENERAL
18.02 MATERIALS
18.03 EXCAVATION TRENCH
18.04 PLACING THE FILTER FABRIC
18.05 LAYING THE PIPE
18.06 PLACING AND COMPACTING FILTER AGGREGATE
18.07 BACKFILL ABOVE FILTER AGGREGATE
18.08 CERTIFICATION
18.09 ACCEPTANCE OF UNDERDRAINS

BACK TO TABLE OF CONTENTS

Section 18.01 GENERAL

The work specified in this ARTICLE consists of the construction of underdrains. Underdrain pipe shall have a minimum diameter of 8 inches, unless otherwise approved by the City Engineer. Underdrains shall be required in all cases unless explicitly deleted by the City Engineer.

Section 18.02 MATERIALS

The materials used shall conform to the following requirements.

18.02.01 Filter Fabric

Filter fabrics for use in underdrains shall conform to the following properties, minimum (use Mirafy 140 or approved equal):

Table 18-1

Fabric	Test Method	Unit	Typical Value
Grab Tensile Strength	ASTM D-1682	lb	120
Grab Tensile Elongation	ASTM D-1682	%	55
Trapezoidal Tear Strength	ASTM D-1117	lb	50
Mullen Burst Strength	ASTM D-3786	psi	210
Puncture Strength	ASTM D-3787	lb	70
Water Flow Rate	CEMC-GET-2	gal/min/sf	285

18.02.02 Pipe Wrap

The filter fabric pipe wrap shall be an approved strong, tough, porous nylon, polyester, polypropylene or other approved fabric. It shall be secured to and completely cover the perforated plastic tubing pipe underdrain to prevent infiltration of trench backfill material. The filter envelope shall weigh a minimum of 4 ounces per square yard and shall retain soil particles larger than 212 microns (No. 70 sieve) when tested in accordance with ASTM D-1682. The grab strength (wet) of the filter wrap shall not be less than 100 lbs and the grab elongation shall not be less than 60%. Storage and handling of filter envelope shall be in accordance with the manufacturer's recommendation. Torn or punctured filter wrap shall not be used.

18.02.03 Filter Aggregate (Fine Aggregate)

Sand used for backfilling trenches under, around and over underdrain pipe shall consist of hard, durable, clean quartz and shall be reasonably well graded, from coarse to fine. When tested by means of laboratory sieves, it shall meet the following requirements, in percent of total weight.

Total Retained on:

Table 18-2

Sieve	Percent
No. 4	0 to 5
No. 8	0 to 15
No. 16	3 to 35
No. 30	30 to 75
No. 50	65 to 95
No. 80	18 o 100

18.02.04 Filter Aggregate (Other)

A) Stone

When stone is used for filter aggregate it shall be composed of clean, durable rock that is non-cementous when exposed to water for extended periods and shall be so certified by a Geotechnical/Soils Engineer. The gradations of stone filter aggregates shall be designed and certified by a Geotechnical/Soils Engineer and approved by the City Engineer. Washed limerock shall not be permitted.

B) Slag

Slag shall be clean, tough and durable. It may be either air-cooled blast-furnace slag or phosphate slag. It shall be reasonably uniform in density and quality, and the gradations of slag filter aggregates shall be designed and certified by a Geotechnical/Soils Engineer and approved by the City Engineer.

O) Expanded Shale

Expanded shale may be used, but only in the filter material grade that meets the gradations specified above for sand.

18.02.05 Pipe

Corrugated Polyethylene Tubing shall be used as underdrain and shall conform to the requirements of AASHTO M-252, latest edition. Polyethylene Tubing shall be delivered in 20 foot lengths (minimum) and shall be fitted, prior to installation, with a filter fabric wrap. PVC Pipe shall satisfy ASTM D-3033 specifications; Aluminum pipe shall satisfy AASHTO M-196 specifications.

Section 18.03 EXCAVATION TRENCH

The trench shall be excavated carefully, to such depth as is required to permit the pipe to be laid to the grade desired and to the dimensions shown in the plans.

The underdrain trench shall be constructed in a dry condition. This shall be accomplished by the use of a well point system or other positive dewatering method.

Section 18.04 PLACING THE FILTER FABRIC

After the trench has been excavated, the filter fabric shall be rolled out over the trench and walked into the trench. Care shall be taken to prevent the excavated material from entering the trench after the fabric has been installed.

Section 18.05 LAYING THE PIPE

After the filter fabric has been placed in the trench, approximately 6 inches of filter aggregate shall be placed in the trench. The pipe shall be bedded firmly in the filter aggregate to the correct line and grade. The upper end of the run of pipe shall terminate at a drainage structure or underdrain cleanout to prevent any filter aggregate from entering the pipe.

All lateral connections to underdrains shall be made at approved drainage structures. Cleanouts and/or approved drainage structures shall be located along all underdrain systems. The maximum spacing of cleanouts or structures shall be 200 feet, or as directed by the City Engineer or his Designee.

Section 18.06 PLACING AND COMPACTING FILTER AGGREGATE

After the pipe has been laid to grade, the pipe shall be firmly held in place by mechanical means while the filter aggregate is placed to a maximum height of 5 inches plus 1 inch (compacted) above the top of the pipe. After the first lift is placed and compacted to the satisfaction of the City Engineer or his Designee the remainder of the filter aggregate shall be placed. The excavation of the trench, the placement of the filter fabric, the installation of the pipe and the placement and compaction of the first lift of filter aggregate shall be accomplished in a single continuous operation. Special care shall be taken to avoid displacement or damage to the pipe or filter fabric.

Section 18.07 BACKFILL ABOVE FILTER AGGREGATE

After the filter aggregate has been placed 12 inches above the pipe the filter fabric shall be lapped the full width of the trench from both sides. The portion of the trench above the filter aggregate shall be filled with fine filter aggregate which shall be placed and tamped in layers not thicker than 12 inches to the existing grade.

Section 18.08 CERTIFICATION

The Contractor shall provide to the City Engineer or his Designee, prior to the final acceptance, a written statement from a Geotechnical/Soils Engineer that all materials installed and that the construction of the underdrain system complies with the approved design.

Section 18.09 ACCEPTANCE OF UNDERDRAINS

Prior to the acceptance for maintenance, the Owner/Developer shall correct any deficiencies. A mandrel shall be used to insure pipe geometry. Failure of the Contractor to perform the required inspection and repairs will result in the City Engineer or his Designee withholding final acceptance and/or Certificates of Occupancy.

ARTICLE 19

SIDEWALKS/BIKEPATHS, CONCRETE CURB, ETC.

Index

19.01 GENERAL
19.02 MATERIALS
19.03 FORMS
19.04 CONSTRUCTION METHODS
19.05 JOINTS
19.06 FINISHING
19.07 CURING
19.08 BACKFILLING AND COMPACTION
19.09 REQUIREMENTS FOR MACHINE-LAYING
19.10 HANDICAP RAMPS

BACK TO TABLE OF CONTENTS

Section 19.01 GENERAL

The work specified in this ARTICLE consists of the construction of curb, curb and gutter, and sidewalks/bikepaths of Portland Cement Concrete. Such work shall be constructed in accordance with this Manual and in conformity with the lines, grades, dimensions, and notes shown on the Plans. Should the Contractor so elect, a curb machine can be used. All concrete shall be finished and supplied as recommended by the PCA and ARTICLE 14 of this Manual. Sidewalks/Bikepaths shall be located at least 2 feet away from walls and fences unless otherwise approved by the City Engineer.

Section 19.02 MATERIALS

Unless otherwise shown on the Plans, concrete shall be Class I, 3,000 psi.

Section 19.03 FORMS

Forms for this work shall be made of either wood or metal. They shall be straight, free from warp or bends, and of sufficient strength when staked to resist the pressure of the concrete without springing.

Forms shall have a depth equal to the plan dimensions for the depth of the concrete being deposited against them.

Section 19.04 CONSTRUCTION METHODS

Excavation shall be made to the required depth. Subgrade or base shall be compacted to a minimum density of 98% of the maximum density as determined by AASHTO T-180 for sidewalks/bikepaths and curbs.

Sidewalk/bikepath construction shall be similar to street construction. Concrete sidewalks/bikepaths shall be at least 4 inches thick, increasing to at least 6 inches thick at driveway entrances. Sidewalks/bikepaths shall have a maximum longitudinal run of 12:1 and a minimum of ¼ inch, maximum of ½ inch per foot positive slope across the surface. There shall be a minimum of ½ inch and maximum of 1 inch per foot positive slope between the top of curb or edge of pavement and the sidewalk/bikepath, unless otherwise specifically approved by the City Engineer.

The concrete shall be placed in the forms to the depth specified and tamped and spaded until mortar entirely covers its surface. The top of the curb or gutter shall be floated smooth and the edges rounded to the radius shown on the plans.

Section 19.05 JOINTS

Where metal templates are used for joint construction, the curb, curb and gutter, etc., shall be constructed in uniform sections 10 feet in length, except where shorter sections are necessary for closures, but no section shall be less than 5 feet.

At the option of the Contractor, the sections may be formed by the use of dummy joints (either formed or sawed) or by the use of sheet metal templates. If sheet metal templates are used, they shall be of the dimensions and set to the lines shown on the plans. The templates shall be held firmly during the placing of the concrete and shall be left in place until the concrete has set sufficiently to hold its shape, but shall be removed while the forms are still in place. Contraction joints shall be spaced at 10 foot intervals for curb and intervals equal to the width of the sidewalks/bikepaths. They shall be ¼ the depth of the concrete. Expansion joints, extending to the full depth of concrete, shall be placed in sidewalks/bikepaths at a maximum of 100 feet, at driveways, sidewalks/bikepaths intersections, all inlets, all radius points, all points where operations cease for any considerable time (such as the end of the day's run), etc. A ½ inch expansion joint shall be installed between all curbs and any abutting structures.

Section 19.06 FINISHING

19.06.01 Surface Requirements

The gutter or flow-line section or curb shall be tested with a 10 foot straight edge laid parallel to the centerline of the roadway while the concrete is still plastic. Irregularities in excess of ¼ inch for curb, curb and gutter, or sidewalks/bikepaths shall be immediately removed.

19.06.02 Repair of Minor Defects

The forms shall be removed within 24 hours after the concrete has been placed, and minor defects then filled with mortar composed of one part Portland cement and two parts fine aggregate. Plastering shall not be permitted on the face of the curb or sidewalk/bikepath. Any rejected curb, curb and gutter, or sidewalk/bikepath shall be removed and replaced.

19.06.03 Final Finish

Sidewalk/bikepath surface, top of the curb, and the face from the top to 8 inches below shall be given a surface finish while the concrete is still green. In general, only a brush finish shall be required.

Section 19.07 CURING

All curbs and sidewalk/bikepath shall be covered with suitable material and kept moist for a period of 3 days or longer, if necessary, and shall be protected in a satisfactory manner from damage by the elements or other causes until acceptance of the work. If curing compound is used, moistening is not required.

Section 19.08 BACKFILLING AND COMPACTION

After the concrete has set sufficiently, but not later than 3 days after placing, the spaces in front and back of the curb shall be refilled to the required elevation with suitable material, which shall be placed and thoroughly compacted in layers not thicker than 6 inches.

Where bases are to be constructed adjacent to the curb, the concrete shall be properly backfilled and shall set for a period of not less than 3 days before any base material is placed against it.

Section 19.09 REQUIREMENTS FOR MACHINE-LAYING

As a specific requirement for machine-laid curb and gutter, contraction joints shall be sawed unless an alternate method of construction is approved in advance by the City Engineer. Joints on curbs shall be provided at intervals of 10 feet, except where shorter intervals are required for closure, but no joints shall be sawed or constructed at intervals of less than 5 feet. Sidewalks may also be machine laid.

Section 19.10 HANDICAP RAMPS

Ramps shall be required at all intersections and be in compliance with the most recent edition of the Florida Accessibility Code for Building Construction as prescribed by law and FDOT Standard Specifications. At each intersection there must be a sufficient number of handicap ramps to facilitate ingress and egress from both sides of the roadway. The slope of the ramp shall not exceed a ratio of 12 horizontal to 1 vertical. A curb ramp shall have a detectable warning complying with Section 11-4.29.2. The detectable warning shall extend the full width and depth of the curb ramp according to Chapter 11 Florida Accessibility Code for Building Construction.

ARTICLE 20

CHAIN LINK FENCE

Index

20.01 GENERAL
20.02 MATERIALS
20.03 INSTALLATION
20.04 ELECTRICAL GROUNDS

BACK TO TABLE OF CONTENTS

Section 20.01 GENERAL

The work specified in this ARTICLE consists of furnishing and erecting chain link fence in accordance with this Manual, and Section 02444 of the Chain Link Manufacturers Institute's Specifications. The placement of any fence shall not interfere with the clear sight distance of intersections or driveways. Driveway gates shall be positioned to allow the length of one standard size vehicle behind the right-of-way line.

Section 20.02 MATERIALS

20.02.01 General

The fabric, posts, fastenings, fittings and other accessories for chain link fence shall meet the requirements of AASHTO M-181 with the following changes:

A) ANSI/ASTM A-123 - Zinc (Hot Galvanized) Coatings of Products Fabricated from Rolled, Pressed, and Forged Steel Shapes, Plates, Bars and Strips.

B) ANSI/ASTM F-567 - Installation of Chain-Link Fence.

C) ASTM A-120 - Black and Hot-dipped Zinc-coated (Galvanized) Welded and Seamless Steel Pipe, for Ordinary Uses.

D) ASTM C-94 - Ready-mixed Concrete.

E) ASTM A-120 - Schedule 40 steel or SS-40 pipe, standard weight, welded joints permitted. Size and weight as specified.

F) FS RR-F-191 - Type I: Zinc-coated steel.
Type IV(A): Extruded vinyl coated steel.
Type IV(B): Fusion bonded vinyl coated steel.

20.02.02 Concrete Mix

Concrete shall meet ASTM C-94 and be of normal sulphate resisting Portland Cement, 3,000 psi minimum at 28 days with a 3 inch slump, and ½ inch sized aggregate.

20.02.03 Framing Materials

	Framing Members	Type I Size/in(O.D.)	Round Wt/plf
A)	End, Corner and Pull Posts		
	12 ft and less	2.875	5.80
	Over 12 ft	4.50	11.00
B)	Line Posts (fabric height)	2.375	3.65
C)	Rails and Braces (fabric heights)	1.660	2.27
	This includes Horizontal brace, Top Rail, Center and Bottom Rail.		
D)	Gate Posts (width of leaf)		
	6 ft and less	2.875	5.80
	Over 6 ft to 13 ft	4.50	11.0
	Over 13 ft to 18 ft	6.625	19.0
	Over 18 ft	Design to be approved and certified	
E)	Gate Frame (size of leaf)		
	8 ft high OR 8 ft wide	2.375	3.65
	Over 8 ft high OR 10 ft wide		
	Plus additional structural members	Design to be approved and certified	
	Stretcher Bars	3/16”x3/4”	
	Color coating shall be applied to match fabric		

20.02.04 Chain Link Fabric (Fences and Gates)

PVC Coated Galvanized Steel shall be of steel wire, conforming to ASTM A-641, a tensile strength 75,000 psi, galvanized (0.30 oz/sf), and coated as follows:

A) Coating type I extruded polyvinyl chloride.

B) Coating type II FUSION BONDED PVC of 7 mils.

The standard material shall be Standard Industrial 2 inch mesh, 9 gauge, 0.148 inch diameter, not including vinyl coating.

The color of fabric, gates, and posts shall be as approved by the City Engineer in either medium green, dark green, black, or brown, as applicable.

20.02.05 Manual Operating Gates

A) Fabrication

Gate frames shall be assembled by welding connections. The same fabric as for the fence shall be used unless otherwise specified. Fabric shall be installed with stretcher bars, or tie wires at the top and bottom if stretcher bars are not used. Stretcher bars shall be attached to the gate frame not more than 14 inches off center. Hardware shall be attached with rivets or by other means which provide security against removal or breakage.

1) For sections over 8 feet in height and 10 feet in width, horizontal and vertical members shall be provided to ensure proper gate operation and for attachment of fabric, hardware and accessories.

2) Diagonal cross-bracing consisting of 3/8 inch diameter adjustable truss rods on gates shall be used where four-sided tension rods are not used. Frame rigidity shall be achieved without sag or twist.

B) Gate hardware shall be galvanized per ASTM A-153.

1) Hinges shall be pressed steel or malleable iron to suit gate size, of non lift off type, and offset to permit 180° gate opening. One pair of hinges per leaf, up to 12 feet in height, shall be provided.

2) Latches shall be the forked type to permit operation from either side of gate. A padlock eye shall be provided as an integral part of the latch.

3) The keeper for the gates, which automatically engages the gate leaf and holds it in the open position until manually released, shall be provided.

4) For double gates, a drop rod to hold the inactive leaf shall be provided. A pipe to engage the center drop rod shall be provided in the pavement. Locking devices and padlock eyes shall be provided as an integral part of the latch thereby requiring one padlock for locking both gate leaves.

20.02.06 Accessories

A) All items shall be galvanized to comply with ASTM A-153 (except tie wires) plus finished to match framing.

B) Tension and tie wire

1) Tension wire shall be 7 gauge galvanized wire.

2) Fabric to line posts, rails and braces shall be 9 gauge minimum.

3) Fabric to tension wire shall use 11 gauge hog rings.

C) Post tops shall be pressed steel, or malleable iron, designed as a drive fit, weather tight closure cap on tubular posts. Where top rails are used, tops shall permit passage of the top rail.

D) Stretcher bars shall be one piece lengths to full height of the fabric with a minimum cross section of 3/16 inch x ¾ inch or equivalent fiberglass rod. Stretcher bars shall be provided for each gate, end, corner and pull post. Stretcher bar bands and clips shall be heavy pressed steel or malleable iron. At square posts, special design clips shall be provided.

Section 20.03 INSTALLATION

A) Framework, fabric, accessories and gates shall be installed in accordance with ANSI/ASTM F-567.

B) Fence shall be of the height and length indicated on the approved plans.

C) Line posts intervals shall not exceed 10 feet.

D) Terminal gate and posts shall be set plumb, in concrete footings with the top of the footing 2 inches below the finished grade. Slope top of concrete for water runoff. Excavate depth as required by ANSI/ASTM F-567.

E) Top rail shall pass through line post tops and be spliced with 7 inch long rail sleeves.

F) Each gate and corner post shall be braced back to the adjacent line post with horizontal center brace rails and diagonal truss rods. Brace rails shall be installed one bay from end and gate posts.

G) Center and bottom brace rails shall be installed on corner and gate leaves.

H) Fabric shall be stretched between terminal posts or at intervals of 100 feet maximum, whichever is less.

I) The bottom of the fabric shall be positioned 2 inches above the finished grade.

J) The fabric shall be fastened to the top rail, line posts, braces, and bottom tension wire with wire ties at a maximum of 15 inches on centers.

K) The fabric shall be attached to the end, corner, and gate posts with tension bars and bar clips.

L) The bottom tension wire shall be stretched taut between terminal posts.

M) Gates with fabric overhang shall match fence. Three hinges per leaf, latch, catches, drop bolt, foot bolts and sockets, torsion spring retainer, and locking clamp shall be installed.

N) Concrete center drop shall be installed to the depth of the foundation. Drop rod retainers shall be placed at the center of double gate openings.

Section 20.04 ELECTRICAL GROUNDS

Wherever a power line passes over the fence, a ground shall be installed directly below the point of crossing. The ground rod shall consist of an aluminum or galvanized rod, with connection of similar metal if required, or of other appropriate material, 8 feet in length and at least ½ inch in diameter. The rod shall be driven vertically until the top of the rod is approximately 6 inches below the ground surface. A No. 6 conductor shall be used to connect the rod and all fence elements. The conductor shall be connected to each fence element and the ground rod by means of electrical-type clamps which will prevent corrosion.

Section 20.05 DECORATIVE GATES

Where a Developer/Owner proposes decorative entry gates for a "Gated Community" for access control, all conditions required in the City's LDC shall be met including the provisions for "Knox Box' and/or 'opticon' control. The Knox Box and all associated appurtenances shall be as approved by the City of Ocoee Fire Department. All automated swing gates shall be installed to provide gate swing in the direction of the vehicular flow.

ARTICLE 21

GRASSING AND MULCHING

Index

21.01 GENERAL
21.02 MATERIALS
21.03 CONSTRUCTION METHODS
21.04 SODDING
21.05 CLEAN-UP

BACK TO TABLE OF CONTENTS

Section 21.01 GENERAL

The work specified in this ARTICLE shall consist of all grassing efforts on road shoulders, ditches, embankments, and other areas left barren by construction in order to establish a dense stand of grass.

Section 21.02 MATERIALS

The grass seed shall be common Bermuda and Bahia, as a minimum. In addition, brown top millet will be included during summer months and annual rye in the winter months. The mulch shall consist of thoroughly shredded straw or hay. All seed shall meet the requirements of the State Department of Agriculture. The chemical composition of the fertilizer shall be 8-8-8 or other chemical composition specified in the plans.

Section 21.03 CONSTRUCTION METHODS

Construction methods shall be in accordance with FDOT Standard Specifications.

Seed shall be applied at not less than the following rate:

Bermuda	30 lb per acre
Bahia (Argentina)	120 lb per acre
Annual Rye	20 lb per acre (October - March)
Brown-Top Millet	20 lb per acre (April - September)

Fertilizer shall be applied at the rate of 1,000 lb per acre.

Section 21.04 SODDING

Sodding shall be in accordance with FDOT Standard Specifications. Sod destroyed or damaged by construction shall be replaced with the same existing type of grass in place prior to construction. All disturbed areas in the public right-of-way shall be sodded.

Section 21.05 CLEAN-UP

After each day's work, all materials shall be removed from all sidewalks and roadways used by the general public.

Section 21.06 WATERING

Watering of seed and installed sod shall be provided in accordance with FDOT Standard Specifications as a minimum. Additional watering may be required to provide an acceptable established stand of grass as directed by the City Engineer.

ARTICLE 22

PAVEMENT MARKINGS

Index

22.01 GENERAL
22.02 MATERIALS
22.03 INSTALLATION

BACK TO TABLE OF CONTENTS

Section 22.01 GENERAL

The work specified in this ARTICLE shall consist of the design and installation of pavement markings as shown on the plans in accordance with this Manual, Orange County Standards as well as FDOT and the MUTCD. Temporary markings shall be used as required by the City. The City Engineer has approval jurisdiction over ARTICLE 22 and any requests for modifications from these Standards.

Section 22.02 MATERIALS

All paint and Thermoplastic Compounds used for pavement markings (only alkyd materials shall be used), reflective pavement markers, and glass spheres shall conform to FDOT Standard Specifications.

Section 22.03 INSTALLATION

All surfaces shall be cleaned prior to the start of installation.

22.03.01 Painted Markings

Painted traffic markings shall be installed in accordance with FDOT Standard Specifications and the MUTCD. Paint may be used only on private development improvements or as temporary markings.

22.03.02 Thermoplastic Traffic Markings

Thermoplastic traffic markings shall be installed in accordance with FDOT Standard Specifications and the MUTCD. Pre-formed plastic markings may be substituted as permitted by the City Engineer. Alkyd materials may be applied immediately after final compaction of asphaltic concrete.

22.03.03 Reflective Pavement Markers

All reflective pavements markers shall be installed in accordance with FDOT Standard Specifications. Blue pavement reflectors shall be installed in the street, in front of fire hydrants, slightly offset from the centerline of the road in the closest lane to the hydrant.

22.03.04 Striping Design

A) Temporary tape to be installed prior to darkness on the day of existing markings removal. No conflicting markings permitted.

B) No markings are to be installed prior to layout approval City engineer or designer.

C) All markings are to be thermoplastic with raised pavement markers where applicable.

D) Centerline and edgeline to extend 15 feet beyond transition point downstream and 15 feet prior to transition point upstream.

E) Hash marks spacing to be in accordance with FDOT Standards.

F) Gore bullnose to have 25 foot minimum radius.

G) Arrow spacing to conform with FDOT Standard Specifications.

H) The City Engineer must approve all striping plans.

I) During auxiliary lane construction and installation of markings the work zone shall be signed in accordance with the MUTCD.

J) When a lane closure is permitted on a road classification of collector or above, the hours of operation shall be limited to 9:00 AM to 4:00 PM.

K) Non-Standard Working hours can be requested from the City by submittal of a written request that outlines the need for the Non-Standard Working hours and the specifics of work to be performed.

ARTICLE 23

MEDIANS

Index

23.01 MEDIAN SEPARATION REQUIREMENTS
23.02 MINIMUM WIDTHS
23.03 OPENINGS
23.04 SPECIAL CONSIDERATIONS

BACK TO TABLE OF CONTENTS

Section 23.01 MEDIAN SEPARATION REQUIREMENTS

At a minimum, median separations shall be required on all divided streets with four or more travel lanes. Median separations may be required in other areas when deemed appropriate . The City Engineer has approval jurisdiction over ARTICLE 23 and any request for modifications from these Standards.

Section 23.02 MINIMUM WIDTHS

A) The minimum width of a median containing a left turn lane shall be 16 feet when curbed. If the median is a bi-directional turn lane, the minimum width shall be 12 feet.

B) The minimum width of a median intended to shadow a crossing or left turning vehicle (from side street or driveway) shall be 22 feet when curbed.

Section 23.03 OPENINGS

A) Median openings on all streets shall be spaced at 660 foot intervals or per the Standards of the LDC.

B) Correct signal spacing and dedicated public streets are given priority consideration for median opening approvals.

C) All median designs and provisions shall be consistent with Standards provided by the Manual of Uniform Minimum Standards for Design, Construction and Maintenance for Streets and Highways (FDOT).

D) All median openings and taper shall include a 12 foot wide left turn storage lane and taper. The minimum lengths for the storage lanes and tapers are included in ARTICLE 24 of this Manual.

E) The preferred end treatment for median opening is the bullet-nose design rather than the circular design.

F) The width of median openings shall be a minimum of 40 feet. The design shall be based upon the required turning radii and lane alignment of the intersection.

G) No median opening shall be allowed where the median is intended to shadow a crossing or left turning vehicle (from side street or driveway), and is of insufficient width to do so.

Section 23.04 SPECIAL CONSIDERATIONS

The minimum spacing requirements of this ARTICLE may be modified upon approval by City Commission given the particular conditions of the proposed development, if the minimums cannot be met, and if such reduction will not compromise operational and safety standards of the adjacent roadway.

ARTICLE 24

TURN LANES AND TAPERS

Index

24.01 GENERAL
24.02 DEDICATION OF ADDITIONAL RIGHT-OF-WAY
24.03 RIGHT TURN DECELERATION AND STORAGE LANES
24.04 ACCELERATION LANES AND TAPERS
24.05 LEFT TURN DECELERATION AND STORAGE LANES
24.06 ALTERNATE STORAGE LENGTHS FOR LEFT TURN LANES
24.07 BYPASS LANES
24.08 EXCEPTIONS
24.09 REVERSE CURVES

BACK TO TABLE OF CONTENTS

Section 24.01 GENERAL

Turn lanes and tapers shall be designed in accordance with this Manual and the Manual of Uniform Minimum Standards for Design, Construction and Maintenance for Streets and Highways (FDOT) and AASHTO Green Book standards. Turn lanes and tapers shall be used to reduce conflict between the traffic on driveways or intersecting streets and the traffic on the through street. This conflict reduction is achieved by providing turning vehicles with a refuge area where acceleration, deceleration, storage, and turning maneuvers may be accomplished. The City Engineer has approval jurisdiction over ARTICLE 24 and any request for modifications from these Standards. Turn lanes and tapers are required for the following conditions:

A) The design speed of the accessed street is 35 MPH or greater.

B) The parcel of property accessing the street is projected to generate 500 or more vehicle trips per day, or 50 or more vehicle trips in any hour.

C) The parcel of property accessing the street is residential and has 50 or more dwelling units.

D) The parcel of property accessing the street is a development that characteristically experiences peaks in its trip generation pattern, i.e., schools, subdivisions, restaurants, public assembly places.

E) At any development as a Traffic Impact Analysis by a registered professional may warrant.

F) At any parcel of property where a use changes to one that meets one of the above conditions.

G) The main street has an average daily traffic count of 500 or more vehicles per day or 50 or more vehicles in any hour.

H) At any location, where grades or other unusual conditions indicate turn lanes to be desirable, as determined by the City. Turn lanes may be required on local streets at intersections for safety or capacity reasons.

I) The street is classified as a thoroughfare.

Section 24.02 DEDICATION OF ADDITIONAL RIGHT-OF-WAY

On any arterial or collector street within a minimum of 150 feet (or as required) of its intersection with another arterial or collector, or at any other location where provisions of this Section require additional right-of-way, the right-of-way shall be increased by at least 10 feet, or as required, to permit proper design of auxiliary lanes and tapers. This additional right-of-way shall be dedicated or conveyed as a public right-of-way. Twenty-five foot corner triangles shall be provided as a minimum at street intersections. A larger triangle may be required at the discretion of the City Engineer.

Section 24.03 RIGHT TURN DECELERATION AND STORAGE LANES

The desirable requirements for lengths of tapers and storage for right turn lanes are based on the speed limit of the road and shall be in accordance with FDOT Standards.

Section 24.04 ACCELERATION LANES AND TAPERS

The desirable requirements for lengths of acceleration lane and tapers are based on the speed limit of the road and shall be in accordance with FDOT Standards.

Section 24.05 LEFT TURN DECELERATION AND STORAGE LANES

The desirable requirements for lengths of acceleration lane and tapers are based on the speed limit of the road and shall be in accordance with FDOT Standards.

Section 24.06 ALTERNATE STORAGE LENGTHS FOR LEFT TURN LANES

Storage lengths for left turn lanes may be calculated in lieu of using the above tables (final approval by the City Engineer or his Designee) by one the of following methods:

A) At un-signalized intersections, the storage length, exclusive of taper, may be based on the number of turning vehicles which are likely to arrive in an average 2 minute period within the peak hour, i.e., SL (storage length in feet) = 2 x 25 ft (average vehicle length) x (number of left turning vehicles in peak hour/60).

B) At signalized intersections, the storage length may be based on the signal cycle length, the signal phasing arrangement, and the rate of arrivals and departures of left turning vehicles that would store per cycle to allow for occasional surges.

Section 24.07 BYPASS LANES

A bypass lane shall be provided for left turns when a median or adequate pavement width does not exist. The taper shall be based on the formula: turn lane = speed x width of lateral movement. Road sections disturbed by bypass and turn lanes shall be completely overlaid with a minimum of 1 inch of asphaltic concrete.

Section 24.08 EXCEPTIONS

Turn lane provisions (left and right) may be imposed unless roadway cross section, right-of-way width, or deficient frontage prohibits compliance and no other access location can be provided for the site. The lanes shall be installed by the Owner/Developer, in the future, when the right-of-way becomes available.

Section 24.09 REVERSE CURVES

Reverse curves shall not be used in place of straight tapers on curb and gutter sections.

ARTICLE 25

DRIVEWAYS

Index

25.01 GENERAL
25.02 REQUIRED SUBMITTALS
25.03 DESIGN CONSIDERATIONS
25.04 DESIGN SPECIFICATIONS
25.05 HANDICAP RAMPS
25.06 EXISTING DRIVEWAYS AND ACCESS POINTS

BACK TO TABLE OF CONTENTS

Section 25.01 GENERAL

All curb cuts and driveways constructed, altered, or removed within the limits of the City of Ocoee shall be constructed, altered, or removed as provided for in this ARTICLE and the LDC. No person shall make any curb cut for a driveway, walkway or any other purpose within the street right-of-way or connect to an existing curb cut or driveway without first obtaining a permit from the City. Additional permits may be required from the County or FDOT for rights-of-way under their jurisdiction. The City Engineer has approval jurisdiction over the design, location, construction permits, materials, methods, and operational portion of this ARTICLE and any requests for modifications from these Standards.

Section 25.02 REQUIRED SUBMITTALS

Information required on plans submitted shall include:

A) A complete plot plan showing all proposed and/or existing buildings and parking layouts and shall include a north arrow, date, and dimensions.

B) Existing and proposed driveway locations and widths on the site and within 150 feet of the site on both sides of the street and in both directions.

C) Distances to the nearest public intersection and to the nearest median cut in both directions, if applicable.

D) Street pavement types and widths, lane layout and widths, curb types, and right-of-way widths.

E) Proposed and/or existing off-street loading and unloading facilities, interior parking arrangements and interior traffic circulating arrangements. (Non-residential requirement only.)

F) Retaining walls, drainage, utility poles, trees, fences, and other physical features which affect the driveway location and sight distance.

Section 25.03 DESIGN CONSIDERATIONS

A) The choice of the proper location of driveways must involve consideration of the amount of the conflict which can be expected to occur both within the parking area and on the abutting streets. One primary concept which shall be followed is to reduce the number of driveways to a practical minimum and to promote consolidated driveway usage wherever possible, thus providing fewer locations where conflicts may occur.

B) The area to which the driveway provides access shall be of sufficient size and design to allow all necessary functions for ingress, egress, loading, unloading, parking, circulation, and standing to be carried out on private property completely off the street right-of-way.

1) Parking areas shall be so designed and marked as to provide for orderly and safe movement and storage of vehicles and pedestrians.

2) No design shall be permitted which requires any vehicle to back out onto a public right-of-way, i.e., a public street, parkway, or sidewalk, except for single family residences.

3) Facilities with drive-in windows must be so designed that waiting vehicles do not extend into the street or right-of-way. A by-pass lane shall be required for all such facilities.

Section 25.04 DESIGN SPECIFICATIONS

25.04.01 Location

A) Single family residential driveways shall not be permitted in the radius return of an intersection.

B) No single family residential driveway, other than duplex or zero lot line, or temporary commercial driveway shall be permitted with its center nearer than 40 feet to the center of the next nearest driveway, except upon special approval of the City Engineer.

C) No centerline of a residential driveway, other than duplex or zero lot line, driveway shall be closer to the adjacent property than ½ of the driveway width plus 6 feet.

D) The centerline of all other types of driveways shall be no closer to the adjoining property than ½ the width of the driveway plus the return radius dimension and 3 feet.

E) No driveway shall be permitted which includes any facility such as traffic signal standards, trees, utility poles, site sign, catch basins, fire hydrants, or any other similar type structure, unless such facility is relocated at the property Owner's/Developer's expense. All setbacks shall meet the FDOT requirements for fixed object hazards.

D) No curb cut shall be made within 3 feet of a drainage inlet or property line.

G) Joint-use driveways shall be used when deemed necessary. The above criteria shall be complied with unless otherwise approved by the City Engineer.

25.04.02 Width

A) The minimum width of single family residential driveways shall be 10 feet and the maximum width shall be 18 feet, with 3 foot flares on either side. For driveways longer than 100 feet, the width may be increased at the discretion of the City of Ocoee Fire Rescue Department.

B) The minimum and maximum widths of commercial driveways, are based upon 12 foot travel lanes for two-way and emergency vehicles for one-way, shall be as specified below:

	Table 25-1	
	Minimum	Maximum
One-Way	16	20*
Two-Way	24	36*
*or as required for multi-lane driveways		

C) Non-residential driveways exceeding the maximum width shall only be considered when usage of 40 foot radius cannot be accommodated.

D) All driveway widths shall be measured at the throat.

E) For all residential driveways, the width of the curb opening shall not exceed the width of the driveway by more than 3 feet on each side.

25.04.03 Angle

A) All driveways shall be constructed as nearly to a right angle (90°) to the street or roadway as possible.

B) This requirement may be waived for one-way driveways, provided that the angle chosen represents improved ingress or egress compared to a right angle driveway and does not adversely affect the driver's sight distance.

25.05.04 Radii

A) On commercial and multi-family residential driveways, a proper radius which will accommodate the minimum turning radii and off-track of the design vehicle according to AASHTO Standards shall be provided. Normally, the design vehicle will be fire and emergency apparatus requiring a minimum radius of 40 feet based on a 24 foot wide two lane driveway. Consideration may be given to the street speed limit and width of driveway opening.

B) Tractor trailer combination shall be the design vehicle, when warranted, with a 55 foot radius as a minimum on all non-single family residential driveways.

C) A radius of less than 40 feet may be approved upon the applicant's demonstration to the City Engineer that the smaller radius is more appropriate for the particular parcel of property being served and that the traffic flow on the street being accessed is not impaired. The minimum radii for internal circulation shall be 20 feet. Three foot flares may be utilized on commercial projects where inadequate distance between the property and the road edge prohibits the use of radii, and shall be used on all non-single family residential driveways.

D) Contraction joints shall be tied at the radii to prevent uneven settlement.

25.04.05 Grade

A) All driveways shall cross the sidewalk/bikepath area at the sidewalk/bikepath grade as approved by the City Engineer. See the Typical City Details attached as part of this Manual.

B) In cases where property slopes down from the street, the driveway shall be constructed in such a manner as to raise the driveway to a height equal to the top of the curb at the right-of-way line or at a more appropriate point, as determined by the City Engineer, before the down slope or up slope of the driveway begins. See the Typical City Details attached as part of this Manual.

C) The driveway shall be designed so that approach, ramp and departure angles do not exceed the maximum as determined by the appropriate design vehicle.

Single Family Residential Driveway - Design Vehicle - Passenger Car

Table 25-2	
Angle Type	**Maximum Angle**
Approach Angle (A)	16.4°
Ramp Angle (B)	11.0°
Departure Angle (C)	10.9°

All Other Driveways - Design Vehicle - Emergency Fire Apparatus

Table 25-3	
Angle Type	**Maximum Angle**
Approach Angle (A)	14.14°
Ramp Angle (B)	7.26°
Departure Angle (C)	8.53°

D) All curb cuts shall consist of a 6 inch raised or flush header curb for non-concrete approaches from the point of curvature to the point of tangency on each side of the driveway, except in locations where the accessed road is constructed with an existing swale, then a flush concrete header curb shall be provided.

25.04.05 Construction Specifications

A) All driveways shall be constructed in conformance to the plans and specifications approved by the City Engineer.

B) Concrete for the construction of the driveway approaches (the portion of the driveway in the right-of-way) shall be at least 3,000 psi concrete and at least 6 inches in thickness and shall utilize 6 x 6 WWF installed on proper benching. Fiber reinforced concrete mixture conforming to the standards of ASTM C1116 may be used in addition to the WWF if desired. Break and expansion joints shall be installed at the property line.

C) Concrete for the construction of curbs shall be at least 3,000 psi concrete.

D) Subgrade of driveways, driveway approaches, and curbs shall be compacted to a minimum density of 98% of the maximum density as determined by AASHTO T-180.

Section 25.05 HANDICAP RAMPS

Handicap ramps shall be constructed for all sidewalks/bikepaths at their intersection with a driveway. All handicap ramps shall be constructed in accordance with ARTICLE 19 of this Manual.

Section 25.06 EXISTING DRIVEWAYS AND ACCESS POINTS

A) Existing driveways shall not be relocated, altered, or reconstructed without a permit approving the relocation, alteration, or reconstruction, and such driveway shall be subject to the provisions of this Section.

B) When the use of any driveway is discontinued, the Owner/Developer(s) of the abutting property shall, at the Owners'/Developers' own expense, remove the driveway and replace all curbs, gutters, sidewalks/bikepaths, swales, and grass areas.

C) When the use, building size or ownership of any property with a driveway(s) is changed, the Owner/Developer(s) of the subject property shall reconstruct the driveway in conformance with City Standards.

D) If an existing driveway becomes a hazard to the driving or pedestrian public using the public facilities within the public right-of-way, the City Engineer may require reconstruction, relocation, or removal of said driveway. Proper notice shall be made to the property Owner as required by law.

ARTICLE 26

UTILITY LINE INSTALLATION REQUIREMENTS

Index

26.01 JACK AND BORE OPERATIONS
26.02 PRESSURE PIPE RESTRAINT
26.03 PRESSURE CONNECTION

BACK TO TABLE OF CONTENTS

Section 26.01 JACK AND BORE OPERATIONS

26.01.01 General

The installation of a casing pipe by the method of jacking and boring shall be covered by these Specifications. The overall work scope shall include, but not be limited to, jacking and boring pits and equipment, sheeting, steel casing pipe, skids, steel straps, coatings, location signs as required, miscellaneous appurtenances, and restoration to complete the entire work as specified in the Typical City Details attached as part of this Manual. Jack and bore operations shall be performed within the right-of-way and/or easements shown on the Drawings.

26.01.02 Pipe Material

A) Steel Casing

Steel casings shall conform to the requirements of ASTM A-139 (straight seam pipe only) Grade "B" with a minimum yield strength of 35,000 psi. The casing pipes shall have the minimum nominal diameter and wall thickness as shown on the following table:

Table 26-1

Carrier Pipe Nominal Diameter	Casing Outside Diameter	Casing Wall Thickness
4"	14"	.250"
6"	16"	.250"
8"	18"	.250"
10"	20"	.250"
12"	24"	.250"
16"	28"	.312"
18"	30"	.312"
20"	34"	.375"
24"	36"	.375"

Field and shop welds of the casing pipes shall conform with the American Welding Society (AWS) standard Specifications. Field welds shall be complete penetration, single-bevel groove type joints. Welds shall be airtight and continuous over the entire circumference of the pipe and shall not increase the outside pipe diameter by more than ¾ inch.

B) Carrier Pipe

The carrier pipe shall be minimum pipe as described in sequential ARTICLES per the appropriate application with all joints restrained. Ductile iron pipe shall comply with the specification outlined in this Manual.

26.01.03 Inspection

All casing pipe to be installed may be inspected at the site of manufacture for compliance with these Specifications by an independent laboratory selected and paid for by the City. The manufacturer's cooperation shall be required in these inspections.

All casing pipe shall be subjected to a careful inspection prior to being installed. If the pipe fails to meet the Specifications it shall be removed and replaced with a satisfactory replacement at no additional expense to the City.

26.01.04 Other Jurisdictions

For casing pipe crossings under roadways, railroads, or other installations not within the jurisdiction of the City, the Contractor shall comply with the regulations of said authority in regard to design, specifications and construction.

26.01.05 Workmanship

A) The jack and bore operations shall be done simultaneously with continuous installation until the casing pipe is in final position. Correct line and grade shall be carefully maintained. Add-on sections of casing pipe shall be full-ring welded to the preceding length, development water-tight total pipe strength joints. The casing installation shall produce no upheaval, settlement, cracking, movement or distortion of the existing roadbed or other facilities. Following placement of the carrier pipe within the steel casing, masonry plugs are to be installed at each open end. Casing pipe and welds shall be asphaltic coated using Koppers 300M or equal with a minimum final dry thickness of 20 mils.

B) Casing pipe holes shall be mechanically bored through the soil by a cutting head on a continuous auger mounted inside the pipe. The auger shall extend a minimum distance beyond the end of the pipe casing to preclude formation of voids outside of the pipe shell.

C) Required jacking and boring pits or shafts shall be excavated and maintained to the minimum dimension. Said excavations shall be adequately barricaded, sheeted, braced and dewatered as required.

26.01.06 Pipe Handling

Care shall be taken in loading, transporting and unloading to prevent injury to the pipe or coatings. Pipe shall not be dropped. All pipe shall be examined before laying, and no piece shall be installed which is found to be defective. Any damage to the pipe or coatings shall be repaired to the satisfaction of the City.

26.01.07 Work Coordination

It shall be the Contractor's responsibility to perform the jack and bore work in strict conformance with the requirements of the agency in whose right-of-way or easement the work is being performed. Any special requirements of the agency, such as insurance, flagmen, etc., shall be strictly adhered to during the performance of work. The special requirements shall be performed by the Contractor at no additional cost to the City.

26.01.08 Dewatering

Dewatering through the casing during construction shall not be permitted. All dewatering methods shall be approved by the City before construction work begins.

26.01.09 Carrier Pipe Support

The carrier pipes shall be supported within the casing pipes so that the pipe bells do not rest directly on the casing. The load of the carrier pipes shall be distributed along the casing by casing spacers. Casing spacers shall be bolt on style split shells made of either T-304 stainless steel or fusion coated steel (a minimum 0.010 inch thick coating of PVC shall be provided over the entire band). The shell shall be lined with a PVC liner 0.090 inch thick with 85-90 Durometer. All nuts and bolts shall be high strength, low alloy meeting AWWA C-lll. Runners shall be made of a high molecular weight polymer with inherent high abrasion resistance and a low coefficient of friction.

26.01.10 Jacking Pits

Excavation adjacent to the roads shall be performed in a manner to adequately support the roads. Bracing, shoring, sheeting or other supports shall be installed as needed. Contractor shall install suitable reaction blocks for the jacks as required. Jacking operations shall be continuous and precautions shall be taken to avoid interruptions which might cause the casing to “freeze” in place. Upon completion of jacking operations, the reaction blocks, braces, and all other associated construction materials shall be completely removed from the site.

Adjust to the roads creating a drop-off hazard as described in the FDOT PPM or Greenbook – Jacking Pits shall be adequately protected meeting FDOT standards.

26.01.11 Miscellaneous Requirements

Correct line and grade shall be carefully maintained. Earth within the casing shall not be removed too close to the cutting edge in order to prevent the formation of voids outside the casing. If voids are formed, they shall be satisfactorily filled with grout by pumping.

The sections of steel casing shall be field welded in accordance with the applicable portions of AWWA C-206 and AWS D-7.0 for field welded pipe joints. Contractor shall wire brush the welded joints and paint with a primer. After completion of jacking, Contractor shall clean the interior of the casing of all excess material. Refer to Approved Manufacturer's List for acceptable products.

The annular space between the carrier pipe and casing shall be filled with clean sand, if required. Masonry plugs are to be installed at each open end of the casing. Plugs shall be suitable for restraining the earth load while allowing drainage of the casing.

Section 26.02 PRESSURE PIPE RESTRAINT

26.02.01 General

Pressure pipe fittings and other items requiring restraint shall be braced with restraining assemblies as specified in this Manual.

All pressure pipe and fittings shall be restrained as specified in this Manual, preventing movement of lines under pressure at bends, tees, caps, valves, hydrants etc. Use of thrust blocks for pressure pipe and fittings 16 inches and larger shall not be allowed. Ductile iron pressure pipe and fittings 12 inches and smaller may be restrained following the criteria established in this Manual.

26.02.02 Thrust Block Construction

Thrust blocks shall not be typical and shall only be used when the City Engineer deems it a hardship or good engineering standards deem it necessary because restraining assemblies are impractical or insufficient. If thrust blocks are used, a thrust block table meeting City standards shall be provided by the Design Engineer. Where undisturbed trench walls are not available for thrust blocking, the Contractor shall furnish additional concrete or install suitable pipe harnesses or ties designed and manufactured specifically for this purpose. Additional concrete, harnesses and/or ties shall be approved by the Engineer and the City. Fittings shall be protected by polyethylene film, minimum 8 mil thick, prior to placing concrete for thrust block.

Concrete for thrust blocking shall have a minimum compressive strength of 3,000 psi. Concrete shall be placed against undisturbed material and shall not cover joints, bolts or nuts, or interfere with the removal of any joint. Wooden side forms shall be provided for thrust blocks where trench conditions require. Thrust blocks shall be properly set and adequately cured prior to pressurizing the system.

26.02.03 Restrained Joint Construction

Sections of piping requiring restrained joints shall be constructed using pipe and fittings with restrained "Locked-type" joints manufactured by the pipe and fitting manufacturer and the joints shall be capable of holding against withdrawal for line pressures 50% above the normal working pressure. Mechanical joint ductile iron pipe retainer glands shall not be permitted. Any restrained joints that allow for elongation upon pressurization will not be allowed in those locations where the pipe comes out of the ground.

The minimum number of restrained joints required for resisting forces at fittings and changes in direction of pipe shall be determined from the length of restrained pipe on each side of fittings and changes in direction necessary to develop adequate resisting friction with the soil.

The required lengths of restrained joint ductile iron pipe shall be determined by the Engineer and shown in a tabular form as depicted on the "Restrained Pipe Table" in the Typical City Details attached as part of this Manual. All calculations shall be based on the method outlined in the publication entitled "Thrust Restraint Design for Ductile Iron Pipe", latest edition (DIPRA).

Wherever two 45° bends are used in place of a 90° bend and the minimum restrained joints required from one 45° bend extend beyond the other 45° bend, the two 45° bends will be considered as though a 90° bend were located midway between the two 45° bends.

26.02.04 Mechanical Restraining Devices

Mechanical restraining devices as specified herein may be substituted for the restrained "Locked-Type" joints manufactured by the ductile iron pipe and fitting manufacturer. The required lengths of restrained joint ductile iron pipe shall be determined by the Engineer and shown in a tabular form as depicted on the "Restrained Pipe Table" in the Typical City Details attached as part of this Manual.

Mechanical joint restraint shall be incorporated in the design of the follower gland and shall include a restraining mechanism which, when actuated, imparts multiple wedging action against the pipe, increasing its resistance as the pressure increases. Flexibility of the joint shall be maintained after burial. Glands shall be manufactured of ductile iron conforming to ASTM A-536. Restraining devices shall be of ductile iron heat treated to a minimum hardness of 370 BHN. Dimensions of the gland shall be such that it can be used with the standardized mechanical joint bell and tee-head bolts conforming to ANSI A-21.11 and ANSI/AWWA C-153/A-21.53. Twist-off nuts shall be used to insure proper actuating of the restraining devices.

The mechanical joint restraint device shall have a working pressure of at least 250 psi with a minimum safety factor of 2 to 1.

Section 26.03 PRESSURE CONNECTION

26.03.01 General

Installations of pressure connections 4 inches and larger shall be made in accordance with this Section.

26.03.02 Tapping Sleeves

Tapping sleeves shall be mechanical joint sleeves or fabricated steel sleeves as specified below. All pressure connections to asbestos cement pipe and all "size on size" taps shall utilize full body mechanical joint sleeves.

A) Mechanical Joint Sleeves

Sleeves shall be cast of gray-iron or ductile-iron and have an outlet flange with the dimensions of the Class 125 flanges shown in ANSI B-16.1 properly recessed for tapping valve. Glands shall be gray-iron or ductile iron. Gaskets shall be vulcanized natural or synthetic rubber. Bolts and nuts shall comply with ANSI/AWWA C-lll/A-21.11. Sleeves shall be capable of withstanding a 200 psi working pressure.

B) Steel Tapping Sleeves

Sleeves shall be fabricated of stainless steel. Outlet flange shall meet AWWA C-207, Class "D" ANSI 150 lb drilling and be properly recessed for the tapping valve. Bolts and nuts shall be high strength low alloy steel to AWWA C-lll (ANSI A-21.11). Gasket shall be a full circumferential gasket be vulcanized natural or synthetic rubber.

26.03.03 Tapping Valves

Tapping valves shall meet the requirements of this Manual except that units shall be flange by mechanical joint ends. Valves shall be compatible with tapping sleeves as specified above and specifically designed for pressure connection operations.

26.03.04 Notification and Connection to Existing Mains

All connections to existing mains shall be made by the Contractor only after the connection procedure and work scheduling has been reviewed and approved by the City. The Contractor shall submit a written request to the City a minimum of 5 working days prior to scheduling said connections. In this request, the Contractor shall outline the following:

A) Points of Connection, fittings to be used, and method of flushing and disinfection if applicable.

B) Estimated construction time for said connections.

All connections shall be made only on the agreed upon date and time. If the Contractor does not initiate and complete the connection work in the agreed upon manner, the Contractor shall be required to reschedule the said connection by following the procedure outlined above. The Contractor shall not operate any valves in the system.

26.03.05 Construction Details

Sufficient length of main shall be exposed to allow for installation of the tapping sleeve and valve and the operation of the tapping machinery. The main shall be supported on concrete pedestals or bedding rock at sufficient intervals to properly carry its own weight, plus the weight of the tapping sleeve, valve and machinery. Any damage to the main due to improper or insufficient supports shall be repaired at the Contractor's expense. Adequate restrained joint fittings shall be provided on the existing main as well as the new main to prevent movement of the installation when test pressure is applied. Provisions of this Manual shall apply.

The inside of the tapping sleeve and valve, the outside of the main, and the tapping machine shall be cleaned and swabbed or sprayed with 10% liquid chlorine prior to beginning installation for water system pressure connections. After the tapping sleeve has been mounted on the main, the tapping valve shall be bolted to the outlet flange, making a pressure tight connection. Prior to beginning the tapping operation, the sleeve and valve shall be pressure tested at 150 psi to ensure that no leakage will occur.

For pressure connections through 12 inch diameter or less the minimum diameter cut shall be ½ inch less than the nominal diameter of the pipe to be attached. For 14 inch through 20 inch installations the minimum diameter shall be 1½ inches less; for larger taps the allowable minimum diameter shall be 2 to 3 inches less than the nominal diameter of the pipe being attached. After the tapping procedure is complete the Contractor shall submit the coupon to the City.

For pressure connections to wastewater force mains the tapping valve shall be placed horizontally. After the tapping procedure is complete a plug valve shall be attached to the tapping valve. The tapping valve shall be left in the open position prior to backfilling.

ARTICLE 27

WASTEWATER FACILITIES DESIGN

Index

27.01 GENERAL
27.02 DESIGN STANDARDS
27.03 MANHOLES
27.04 SERVICE CONNECTIONS
27.05 LINE LOCATIONS
27.06 GREASE TRAPS

BACK TO TABLE OF CONTENTS

Section 27.01 GENERAL

The following design criteria shall pertain to the general requirements of all sanitary manholes, gravity sanitary sewers, lift stations, and force mains. Additionally, the Water Environmental Federation (WEF), Manual of Practice No. 9, entitled "Design and Construction of Sanitary and Storm Sewers", latest edition, may generally be used as a design guide, if not in conflict with State, local, or other regulatory agency requirements or with any material presented herein.

27.01.01 Type of Sewers

The City will approve Plans for new sewer systems and extensions only when designed as separate systems in which precipitation, runoff and groundwater are excluded.

27.01.02 Design Period

Sewer systems shall be designed for the estimated ultimate tributary population as derived for the City's approved future land uses or as delineated in the approved City of Ocoee Wastewater Master Plan, latest edition, except when considering parts of the systems that can be readily increased in capacity.

27.01.03 Location

Gravity sewers shall be located in dedicated rights-of-way or utility easements. Whenever possible, sewers shall be located under pavement in dedicated rights-of-way. All sewers located outside of dedicated rights-of-way shall require a minimum 20' easement. If a gravity sewer is located adjacent to a road right-of-way, a minimum 10' easement shall be provided. Additional easement widths shall be provided if the pipe size or depth of cover so dictate. No gravity sewers shall be placed under retention ponds, tennis courts, or other structures. In general, gravity sewers shall not be located alongside of rear lot lines. Placement of a gravity sewer alongside a rear lot line may be allowed on a case-by-case basis if such a sewer configuration results in efficient placement and utilization of the sewer system. These criteria shall also apply to sewer placement in retention pond berms. In any event, no manholes shall be placed alongside of rear lot lines.

27.01.04 Design Calculations

Design Engineer shall submit signed, sealed and dated design calculations with the plans for all sewer projects. Calculations shall show that sewers will have sufficient hydraulic capacity to transport all design flows. In lieu of calculation, the Design Engineer may submit design computer model and associated information including inputs, assumption, model run result(s) that indicate system is designed to comply with City requirements and signed and sealed design report. Model shall be integrated into City model for simulations.

Section 27.02 DESIGN STANDARDS

Sanitary sewer force mains and gravity design shall specifically be in accordance with ARTICLE 28 and ARTICLE 29 of this Manual.

27.02.01 Average Daily Flow (ADF)

The average daily flow is the standard base reference in the design of all wastewater systems. It represents the annual average daily flow of wastewater generation. All service area generators such as domestic, commercial, institutional, and industrial shall be included in the determination of the total average daily flow. Either per capita unit flows, fixture unit methods, and/or historical flows shall be used by the designer in determining the ultimate project flow in accordance with those rates currently in effect and available at the City of Ocoee.

27.02.02 Peak Flow

The peak flow is used in the design of all wastewater systems. It is the product of a peaking factor and the average daily flow. The peaking factor is a ratio of the average daily flow and the peak discharge, occurring during the maximum daily flow of the year. The selection of the peaking factor is based upon the following table for flows (ADF) up to 3.0 MGD. Peaking factors for flows with larger average daily flows will be evaluated by the Engineer on an individual basis.

Table 27-1

Flow Range (MGD-ADF)	Peaking Factors (PF)
0.000-0.100	4.0
0.101-0.300	3.5
0.301-0.900	3.0
0.901-3.000	2.5

Section 27.03 MANHOLES

27.03.01 General

Manholes shall be in accordance with ARTICLE 17 and per the latest revision of the City's Typical City Details. Manholes shall be precast concrete with integral slab and lower ring, or be poured-in-place concrete slab with precast ring wall, or be of all fiberglass construction meeting ASTM D-3753 standards.

27.03.02 Location

Manholes shall be installed at the end of each gravity sewer; at all changes in grade, size or alignment; at all sewer intersections; and at distances not greater than 400 feet. When Private sewer systems must be separated from the City sewer system, a manhole shall be required at change of ownership.

27.03.03 Manhole Base

Bottom slabs for fiberglass and poured-in-place manholes shall be a minimum of 8" thick and reinforced with No. 4 bars at 9" on centers. Precast manholes shall be in accordance with FDOT Standard Specifications. All bases shall have proper lifting hooks in the bottom slabs (minimum of 3). There shall be no penetrating lifting holes on any structures, and no holes shall be allowed within 6" of any joint on structures.

27.03.04 Rings and Covers

See Atricle 16 Section 16.11 for more rings and covers details

27.03.05 Top Elevation

Precast manhole tops shall be adjustable between 6" and 12" by means of solid clay bricks or precast grade rings laid in mortar. Vertical walls of manhole entrances shall not exceed 18" in length, including the ring and cover.

27.03.06 Coating

Typical coating for concrete sanitary manholes shall be coated, at a minimum, with coal tar epoxy. All manholes with drop connections, force main connections, receiving manholes and large manholes shall be coated with spray on Green Monster™ Liner at a 90 to 110 mil thickness or approved equal. This work shall be accomplished prior to TV inspection.

27.03.07 Joint Sealer

A pre-formed plastic joint sealer shall be required. All exterior joints shall be sealed with approved rapid seal tape with a minimum of 8" width.

27.03.08 Connections to Manholes

Connections shall be as specified in the Typical City Details attached as part of this Manual. Connections shall be made with a wall penetration boot. The specific manufacturer and model are as listed in the approved materials list. Space between boot and pipe OD shall be filled with appropriately sized cavity O-ring. Clay pipe shall have a short nipple (18" or 24") between the manhole fitting and the first full length of pipe. All openings for pipes into existing structures shall be made by cutting with a power driven circular coring machine.

27.03.09 Non-Shrink Mortar

All holes in manholes and wet wells shall be thoroughly plugged with an approved non-shrinking mortar, applied and cured in strict conformance with the manufacturer's recommendations. The mortar shall be finished smooth and flush with the adjoining interior and exterior manhole and wet well wall surfaces. When mortar is set, coat with an approved coating as listed in the approved materials list.

27.03.10 Stubs and Stoppers

Pipe stoppers shall be installed in all manhole stubs. When connecting to an existing stub and prior to removing the existing stopper, brick the inside opening to prevent any flow until the new system has been tested and cleaned. The brick shall not be removed until the final inspection.

27.03.11 Bulkheading Stub Channels

The downstream end of all outlets in the manholes of sub-out-channels not in use shall be bulkheaded to prevent the creation of a septic condition resulting from ponding of sewage or debris.

Section 27.04 SERVICE CONNECTIONS

27.04.01 General

Service connections connecting the gravity sewer to the house or establishment being served, shall be through a lateral and miscellaneous appurtenances, all as specified in the Typical City Details attached as part of this Manual.

27.04.02 Size and Length

Service laterals and fittings shall be a minimum of 6" in diameter and shall be less than 100' in length.

27.04.03 Slope

Service laterals shall have a minimum slope of 1%.

27.04.04 Connection

In general, service laterals shall not be allowed to discharge into sanitary manholes, except at terminal manholes. A case-by-case exception to this requirement may be allowed if the lateral discharges at the same elevation as the manhole invert.

Section 27.05 LINE LOCATIONS

A) Mains shall be installed in the center of paved right-of-way on new construction.

B) Where sewers are to be installed in existing paved areas, mains may be installed in unpaved portions of the right-of-way. All utility lines to be dedicated to the public, located outside of dedicated rights-of-way, shall require a minimum 20' easement. If a utility line to be dedicated to the public is located adjacent to a road right-of-way, a minimum 10' easement shall be provided. Additional easement widths shall be provided if the pipe size or depth of cover so dictates.

C) Mains shall not be allowed inside of back lot easements unless approved by the Engineering Department prior to construction.

D) Mains shall not be installed beneath canals, retention areas, or swales without prior approval of the Engineering Department. Any lines in these areas must be installed within a pipe casing that extends the full length of the body being crossed.

ARTICLE 28

GRAVITY SANITARY SEWERS

Index

28.01 GENERAL
28.02 DESIGN CRITERIA
28.03 MATERIALS
28.04 INSTALLATION
28.05 CONNECTIONS
28.06 TESTING
28.07 TESTING PRIOR TO RESURFACING
28.08 FINAL INSPECTION
28.09 GREASE INTERCEPTORS
28.10 IDENTIFICATION

BACK TO TABLE OF CONTENTS

Section 28.01 GENERAL

This ARTICLE shall govern the design and construction of gravity sewer mains, service laterals, manholes, stoppers, and other appurtenances.

Pipe used in gravity sewer construction shall be polyvinyl chloride (PVC) or ductile iron pipe with an approved interior coating/lining (DIP). Alternate pipe material use may be allowed if prior approval is obtained from the City Engineer. Where reference is made to an ASTM, ANSI or AASHTO designation, it shall be the latest revision.

The Contractor shall be responsible for all materials furnished and storage of same until the date of substantial completion. At the Contractor's expense, all materials found to be defective or damaged in handling or storage shall be replaced. The Contractor shall, if requested by the City, furnish certificates, affidavits of compliance, test reports, or samples for check analysis for any of the materials specified herein. All pipe delivered to project site for installation is subject to random testing for compliance with the designated Specifications.

Section 28.02 DESIGN CRITERIA

A) Design Flow: Sewers of 15" in diameter and less shall be designed to not exceed ½ pipe depth full at peak design flow. Sewers greater than 15" shall be designed to not exceed ¾ pipe depth full at peak design flow.

B) Minimum diameter

1) Main Sewer - 8 inches.
2) Single lateral - 6 inches.
3) Commercial user lateral - 6 inches.
4) Multi-Family user lateral - 6 inches.

C) Velocity in pipes

1) Minimum - 2 feet per second. (At the design flow)
2) Maximum - 7 feet per second.

D) Minimum Cover

The minimum cover over gravity sewers shall be no less than 3 feet, calculated from the finished grade. Exceptions to this requirement may be made for a short length of pipe where structural considerations are incorporated in the design.

E) Roughness Coefficient: For Manning's formula use an "n" value of 0.012 for PVC and 0.013 for other pipe materials.

F) Minimum Slope versus Pipe Diameter

Table 28-1

Minimum Slope in Foot Per 100 Feet

Sewer Size	PVC	Other Material
8"	0.30	0.33
10"	0.21	0.25
12"	0.17	0.19
15"	0.12	0.15
18"	0.10	0.11
21"	0.08	0.09
24"	0.07	0.08
27"	0.06	0.07
30"	0.05	0.06
36"	0.04	0.04

Slopes slightly less than those required for the velocity of 2.0 feet per second may be permitted under special conditions, when pipe is flowing full, if detailed justifiable reasons are given. Such decreased slopes shall only be considered where the depth of flow will be 0.3 of the diameter or greater for design average flow. Whenever such decreased slopes are selected, the Developer's Engineer must furnish computations of the depths of flow in such pipes at minimum, average, and peak rates of flow.

Sewers shall be laid with uniform slope between manholes.

G) Size and Alignments

Size conversion between manholes shall not be allowed. All sewers shall be laid with straight alignments between manholes.

H) Additional Requirements

Main drain and back wash systems for pools, spas and storm drain systems shall not connect to the gravity sewer system.

In general, all sewer extensions for future connections shall terminate at a manhole. The City may allow such extensions without a terminal manhole on a case-by-case basis subject to all of the following conditions:

A) Total sewer extension length shall be limited to 50 feet.

B) Sewer extension location at the initiating manhole shall be plugged to the satisfaction of the City.

C) Such sewer extensions shall not be a part of the accepted sewer facilities. This shall be clearly delineated on the plans.

D) All such sewer extensions shall be inspected and accepted as part of the future construction phase.

Section 28.03 MATERIALS

28.03.01 PVC Gravity Sewer Pipe

PVC Gravity Sewer Pipe (4" to 15"), ASTM D-3034, SDR 35. Uniform minimum "pipe stiffness" at 5% deflection shall be 46 psi. When the average depth of cover of the gravity sewer pipe is 12' or greater, SDR 26 PVC pipe shall be installed. The joints shall be integral bell elastomeric gasket joints manufactured in accordance with ASTM D-3212 and ASTM F-477. Applicable UNI-Bell Plastic Pipe Association standard is UNI-B-4.

PVC Gravity Sewer Pipe (18" to 27"), ASTM F-679, SDR 35. Uniform minimum "pipe stiffness" at 5% deflection shall be 46 psi. When the average depth of cover of the gravity sewer pipe is 12' or greater, SDR 26 PVC pipe shall be installed. The joints shall be integral bell elastomeric gasket joints manufactured in accordance with ASTM D-3212 and ASTM F-477. Applicable UNI-Bell Plastic Pipe Association standard is UNI-B-7.

All PVC pipe shall bear the NSF-DW seal. The minimum standard length of pipe shall be 13 feet.

28.03.02 DIP Gravity Sewer Pipe

The use of Ductile Iron Pipe (DIP) shall be limited to specific uses and shall be approved by the City Engineer. DIP shall conform to ANSI/AWWA A-21.51/C-151, class thickness designed per ANSI/AWWA A-21.50/C-150, with mechanical or push-on joints. An interior protective lining of Protecto 401 shall be provided with a minimum dry thickness of 40 mils or equivalent. DIP gravity sewers, where called for by the City, shall be wrapped with polyethylene film, AWWA C-105. (See approved Manufacturer's List attached as part of this Manual.) The minimum standard length of pipe shall be 18 feet.

28.03.03 Coatings and Linings (Iron Pipe)

All ductile iron pipe and fittings shall have an interior protective coating of Protecto 401 in accordance with the manufacturers recommendations. Interior coating shall be holiday free and holiday tested in accordance with ASTM G-62 and ASTM D5162.

Polyethylene Encasement, where required, shall be per ANSI A-21.5 (AWWA C-105). If Exterior polyethylene encasement is not required, the pipe exterior shall be bituminous coated.

28.03.04 Non-Shrink Mortar

All holes in manholes and wet wells shall be thoroughly plugged with an approved non-shrinking mortar, applied and cured in strict conformance with the manufacturer's recommendations. The mortar shall be finished smooth and flush with the adjoining interior and exterior manhole and wet well wall surfaces. When mortar is set coat with an approved coating material. For manholes and wet wells with sprayed on liners, treatment of exposed mortar shall follow manufacturer's recommendations.

28.03.05 Sanitary Manholes

Sanitary manholes shall be in accordance with ARTICLES 17 and 27 of this Manual.

Section 28.04 INSTALLATION

28.04.01 General

Trench excavating and backfill including sheeting and bracing, dewatering, bedding and foundation, and furnishing and disposal of materials shall be performed in such a manner as to promote the safe and expedient execution of the work and in all cases shall conform to the requirements of OSHA CFR 1926 Subpart P for trench safety.

28.04.02 Pipeline Trenching

A) Excavation of trenches shall not advance more than 50 feet ahead of completed pipe installation, except as approved by the City Engineer or his Designee.

B) Excavation in close proximity to existing utilities shall be performed in a manner to prevent damage. Representatives of utilities shall be contacted for assistance in locating buried lines.

C) All excavations should be made by open cut **unless otherwise indicated in this Manual**. See the Typical City Details attached as part of this Manual.

28.04.03 Sheeting, Shoring, and Bracing

Furnish, install, and maintain sheeting, bracing, and shoring support required to keep excavations within the easement or right-of-way, to support the sides of the excavation, and to prevent any movement which may damage adjacent pavements or structures, damage or delay the work, or endanger life and health. Voids outside the supports shall be immediately filled and compacted. Sheeting, bracing, and shoring to be used shall be designed by a Florida Registered Professional Engineer.

28.04.04 Dewatering and Drainage

At all times during construction keep excavations free from standing water. Sumps, if required, shall be located outside of load bearing areas so the bearing surfaces will not be disturbed. Water pumped from the excavation shall be discharged to prevent re-entry into the soil strata being dewatered. Water containing material such as silt in suspension or solids shall not be pumped into sewer lines or adjacent streams. The method of disposing of water pumped from the excavation shall be approved by the City Engineer or his Designee prior to actual disposal. Dewatering discharges shall comply with all Regulatory Agency Requirements.

28.04.05 Stabilization

If portions of the bottom of trenches or excavations consist of material unstable to such a degree that, in the opinion of the City Engineer, it cannot adequately support the pipe or structure, the bottom of the trench or excavation shall be over-excavated and stabilized with approved coarse granular stabilization material. Depth of stabilization shall be sufficient to provide unyielding Surface or a min thickness of 6 as directed by the City Engineer or his Designee.

28.04.06 Bedding of Piping

A) General

1) Haunching is defined as the shaped and tamped granular material which extends from the pipe bedding to the spring line of the pipe. Cover is defined as the compacted material which protects and covers piping, and which extends from the top of haunching material to a point 1' above the top of the pipe. Backfill, as specified hereafter, is defined as the material extending above the top of pipe cover to topsoil, paving subgrade, or foundation level.

2) All buried piping shall be continuously bedded and covered, except where concrete encasement, concrete cradles, or jack and bore are indicated.

B) Pipe Bedding

Any part of the trench bottom that is excavated below the pipe grade shall be backfilled to grade with a minimum of 6 inches of granular material and compacted as required in Section 26.04.07. Bedding materials shall be limited to Class I or Class II materials.

C) Pipe Cover

All cover materials shall be clean fill with no debris and carefully deposited to avoid damage to the pipe and shall be compacted as specified hereafter.

28.04.07 Trench Backfilling

Backfill shall be granular material or suitable previously excavated pipe trench material approved for use by the City Engineer. The granular backfill shall be carefully deposited in uniform lifts as specified below and each lift shall be wetted adequately as needed to obtain the required compaction density with vibratory compactors, as specified hereafter.

Unless otherwise indicated or approved by the City Engineer or his Designee, fills shall be placed in the loose lift thicknesses indicated hereafter and compact to a dry density, not less than the following percentage of maximum dry density, determined by the Modified Proctor Test, ASTM D-1557, unless otherwise noted.

28.04.08 Pipe Laying and Jointing

Gravity sewers shall be laid in the dry to the elevations and slopes shown on the approved construction drawings. Laser equipment shall be used to provide line and grade. Surveying equipment shall be used to set the laser. The laser equipment shall have a slope indicator to facilitate checking by both the pipe-laying foreman and the City Engineer. Since most gravity sewers are laid with extremely flat slopes, zero tolerance for errors in line and grade will be allowed. Upon completion of the work, the lines shall be cleaned, with all debris removed at downstream manhole. Each section of pipe shall be TV inspected to indicate any pipe defects such as bellies or other deformities, and, if necessary, shall be taken up and re-laid to provide the correct line and grade. Special attention shall be given to the requirement that the pipe be laid in a dry trench with properly compacted bedding and backfill. The pipe shall be laid with the spigot ends pointing in the direction of flow, starting at the lowest point. Joint contact surfaces shall be cleaned immediately prior to jointing. Lubricants, primers, or adhesives shall be used as recommended by the joint manufacturer. The minimum allowable cover for gravity sewers shall be 3 feet from the top of the pipe to the finished grade. However, should this depth not be feasible, where grade depressions along the alignment are unavoidable, ductile iron pipe shall be provided within the limits of the lesser cover. In no case shall the pipe cover be less than 18 inches, and any deviations from 3 feet of cover shall be approved in writing by the City Engineer. Pipes shall be installed to the alignment and grade as shown on the approved plans.

28.04.09 Branches

Wye branches are to be installed in conjunction with the laying of sewer pipe. Wyes to serve all existing and future dwelling units shall be installed. The longitudinal barrel of branch fittings shall conform to the line and grade, diameter, and quality of the sewer main. All service laterals shall be perpendicular to the longitudinal axis of the pipe.

28.04.10 Laterals

Laterals shall be extended to and located between 3 and 4 feet below the right-of-way line's finished grade, with a 6" clean out as near to right-of-way line as permitted. No double service laterals allowed for single or duplex homes. Laterals shall run in the most direct route and perpendicular to the sewer main at a minimum grade of 1% from the main to the right-of-way line. A wye branch fitting for each service line shall be provided. Double wyes are not acceptable. All laterals and service wyes at the last joint shall be plugged and securely sealed to withstand the internal pressure of leakage or air pressure testing. The plug shall be capable of removal without injury to the socket. An S shall be saw cut and painted green in the top of the curb directly over the lateral location. If curbing is not part of the work, a 4" x 4" x 3' wooden stake shall be painted green and installed at the end of the connection. Clean-out caps shall be of the inverted hex-nut type. If required by the City Engineer or his Designee, the terminal ends of laterals shall be marked by electronic location devices that are compatible with City owned equipment. Cleanouts shall not be permitted in driveways.

28.04.11 Protection of Water System Crossings

1. Separation of Water Mains and Sewers:

   A. Separation of potable water, reclaimed water, storm and sewer systems shall comply with FDEP regulations and STANDARD DRAWINGS

   B. Water pipes shall not pass through any part of a storm sewer or manhole. A three-foot minimum separation from storm water structures shall be maintained to facilitate maintenance and operation.

2. Compliance with F.A.C.Rule 62-555.314 shall be met as a minimum.

3. If required by the City Engineer, cathodic protection shall be provided.

28.04.12 Downstream Protection

Dirt and debris collected in the pipe during construction shall not be flushed downstream. The open end of pipe shall be closed daily to prevent foreign matter from entering.

Section 28.05 CONNECTIONS

28.05.01 Transition Connections

Where pipes of alternate materials (VC to CI, etc.) are to be connected between manholes, suitable approved transition couplings shall be installed. Specially designed units may be submitted for approval. Concrete collars are not acceptable.

28.05.02 Connections to Existing Lines

A collar wye saddle for 4 inch and 6 inch diameter connections to existing sewer lines shall be used. The existing line shall be cut using a template to accomplish a true and clean opening for the saddle. Gasketed saddles with stainless steel straps shall be used, where available from the manufacturer. The sewer main shall be protected and cleaned of debris.

28.05.03 Tall Riser Connections

Connections shall be provided, as specified in the Typical City Details attached as part of this Manual, where the depth of the sewer main invert exceeds 10 feet below the finished grade of the street, unless otherwise required by the City Engineer or his Designee. Lateral connections shall be made by individual single wyes. Double wyes for connection are not permitted. One tall riser connection may service no more than 2 connections, 1 to each side.

28.05.04 Connections to Manholes

Connections shall be as specified in the Typical City Details attached as part of this Manual. Connections shall be made with a Kor-N-Seal/**A-Lock** type or equal wall penetration boot. Space between boot and pipe OD shall be filled with appropriately sized cavity O-ring. Clay pipe shall have a short nipple (18 inch or 24 inch) between the manhole fitting and the first full length of pipe. All openings for pipes into existing structures shall be made by cutting with a power driven circular coring machine.

28.05.05 Connections to Wet Wells

One joint (18-20 feet) of ductile iron pipe shall extend outward from the structure. Perform connections as for manholes.

28.05.06 Conflicting Structures and Protection of Sanitary Sewer at Utility Crossing

Where it becomes necessary to extend sewers through structures, such as conflicting manholes, junction boxes, etc., the pipe shall be ductile iron within a casing pipe with no joints inside the conflicting structure. Where the vertical separation between sanitary sewer and storm sewer is less than 18 inches, the sanitary sewer shall be installed as polyethylene lined ductile iron pipe.

Section 28.06 TESTING

28.06.01 PVC Ring Deflection

Maximum diameter ring deflection shall not exceed 5% of the internal pipe diameter throughout the warranty period when tested by a mandrel. The mandrel shall be a GO-NO-GO type with an unequal number of runners, minimum of 9, and a maximum distance between the runners of 2 inches. A gauging ring certified for each size of pipe inside diameter and the mandrel size shall be as follows:

Table 28-2

Pipe Size	Mandrel Diameter
8"	7.37
10"	9.22
12"	10.98
15"	13.43

Should the test fail, necessary repairs shall be accomplished by the Contractor and the test repeated until within the established limits. The Contractor shall furnish the necessary labor, water, and all other items necessary to conduct the required testing and perform the necessary system repairs required to comply with the specified test. On pipes determined to have excessive deflection, the length in question shall be relayed or replaced.

28.06.02 Infiltration/Exfiltration

There shall be no detectable level of infiltration or exfiltration from the system at the time of inspection. Any evidence of exceeding the limits of 28.07.02 must be corrected prior to acceptance by the City. This includes both line and manholes.

Section 28.07 CCTV INSPECTION STANDARDS

28.07.01 PART 1 – GENERAL

28.07.01.01 Scope of Work

A) These specifications cover the testing and inspection for acceptance of wastewater and storm-water collection and transmission systems.

B) Requests for testing and acceptance of wastewater and storm-water collection and transmission systems shall be executed in accordance with Article 26 and Article 32.

C) Gravity Mains:
Shall be inspected with CCTV for alignment, grade variations, separated pipes, leaks, deflection, cracked, broken or otherwise defective pipe to ensure overall pipe integrity. The CCTV inspection contractor shall perform the CCTV inspection(s) and submit the electronic files and report(s) to the City Engineer as required**.**

28.07.02 PART 2 - PRODUCTS

28.07.02.01 CCTV Inspection Equipment

A) Closed Circuit Television Camera:
The television camera used for the inspection shall be color and one that is specifically designed and constructed for sanitary sewer inspection. Lighting for the camera shall be suitable to allow a clear picture of the entire periphery of the pipe. The camera shall be operative in 100 percent humidity/submerged conditions. The CCTV camera equipment will provide a view of the pipe ahead of the equipment and of features to the side of the equipment through turning and rotation of the lens. The camera shall be capable of tilting at right angles along the axis of the pipe while panning the camera lens through a full circle about the circumference of the pipe.

B) Lateral Video Camera
Lateral cameras may be push type or launched from the sewer main line. Lateral cameras shall be color, shall be self leveling, and equipped with a footage counter to provide on screen display of footage measurement.

C) Video Capture System:
The video recordings of the sewer inspections shall be made using digital video equipment. The digital recording equipment shall capture sewer inspection on DVD disks or hard drive, with each sewer reach inspection recorded as an individual movie file (.MPEG, .MPG, or .WMV) or approved equal.

1. The video file names will be referenced in the inspection database and in an inspection report generated in PDF format. The pipeline collection and real time video capture and data acquisition systems shall be provided.

2. The system shall use the most current PACP compliant application software and shall be fully object oriented or approved equal. It shall be capable of printing pipeline inspection reports with captured images of defects or other related significant visual information on a standard color printer.

3. The imaging capture system shall store digitized color picture images and be saved in digital format on a DVD, hard drive or approved equal. Also, this system shall have the capability to supply the City of Ocoee with inspection data reports for each line segment.

4. The contractor shall have the ability to store the compressed video files in industry standard and approved the City of Ocoee format and be transferable with the PACP compliant inspection database.

5. The contractor's equipment shall have the ability to "Link". “Linking” is defined as storing the video time frame code with each observation or defect with the ability to navigate from/to any previously recorded observation or defect instantaneously.

6. The system shall be able to produce data reports to include, at a minimum, all observation points and pertinent data. All data reports shall match the defect severity codes in accordance with PACP naming conventions

7. The data-sorting program shall be capable of sorting all data stored using generic sort key and user defined sort fields.

8. Camera footage, date & manhole numbers shall be maintained in real time and shall be displayed on the video monitor as well as the video character generators illuminated footage display at the control console.

9. Depth gage: The camera shall have a depth gage or approved method to measure deflection in the pipe and joint separation approved by the City of Ocoee.

28.07.02.02 Gravity Main Inspection CCTV Data

A) CCTV data shall be recorded and saved in MPEG format or Windows Media video format.

B) CCTV inspections shall use unique identification numbers established and provided by the City of Ocoee in pipe segment reference, upstream manhole number and the downstream manhole number fields.

C) The video files will be named in accordance with the City of Ocoee file naming convention:
Upstream MH ID _ Downstream MH ID _ Inspection Date (year_month_day).wmv.
Example: 39540008_39540007_2009_08_05.wmv

D) Reports shall be submitted in an electronic version (.pdf) generated by the computer software and shall be consistent with PACP requirements, observation report with still images; and CCTV inspection results.

1. PACP export pipe inspection database (.mdb) saved on CD-R's, DVD, or portable hard drives

2. Inspection digital photographs in JPEG format saved on CD-Rs, DVD or portable hard drives

E) The video file names will be referenced in the inspection database and in an inspection report generated in PDF format. The pipeline collection and real time video capture and data acquisition systems shall be provided

F) The system shall use the most current PACP compliant application software and shall be fully object oriented or approved equal. It shall be capable of printing pipeline inspection reports with captured images of defects or other related significant visual information on a standard color printer.

G) The imaging capture system shall store digitized color picture images and be saved in digital format on a DVD, hard drive or approved equal. Also, this system shall have the capability to supply the City of Ocoee with inspection data reports for each line segment.

H) The CONTRACTOR shall have the ability to store the compressed video files in industry standard and approved the City of Ocoee format and be transferable with the PACP compliant inspection database.

I) The CONTRACTOR'S equipment shall have the ability to "Link". "Linking" is defined as storing the video time frame code with each observation or defect with the ability to navigate from/to any previously recorded observation or defect instantaneously.

J) The system shall be able to produce data reports to include, at a minimum, all observation points and pertinent data. All data reports shall match the defect severity codes in accordance with PACP naming conventions

K) The data-sorting program shall be capable of sorting all data stored using generic sort key and user defined sort fields.

L) Camera footage, date and manhole numbers shall be maintained in real time and shall be displayed on the video monitor as well as the video character generators illuminated footage display at the control console.

28.07.03 PART 3 – EXECUTION

28.07.03.01 Gravity Main Requirements Before CCTV Inspection

A) All manhole flow channels and benching per specifications shall be constructed and coated (if applicable) prior to CCTV inspection.

B) CCTV inspections shall be received, reviewed and approved by the City of Ocoee prior to installation of pavement.

C) The CONTRACTOR shall clean gravity mains to remove debris and stains from the pipe prior to televising. Flushing water or debris will not be allowed to enter pump station wet wells. Water will be pumped from the sewer system during flushing to an acceptable discharge location. A visual inspection shall be made and all obstructions removed.

D) Gravity Mains/Pipes that are dirty (dirty walls and/or debris in the inverts) shall be re-flushed and cleaned before rescheduling a CCTV inspection. If necessary, swabbing may be required of specific sections of pipe.

E) The CONTRACTOR shall pass a mandrel through the PVC pipe to confirm if ring deflection is in excess of five percent (5%). The base inside diameter shall be used to determine mandrel size as per ASTM D 3034 and/or ARTICLE 28.

F) Dewatering systems shall not be operated within 48 hours prior to CCTV inspection.

G) Backfill from the gravity main to the subgrade shall be compacted and stabilized for inspection and cleaning vehicle access prior to CCTV.

28.07.03.02 Notification

A) Contractor shall notify the City of Ocoee a minimum of 48 hours prior to performing any CCTV gravity main inspection work.

28.07.03.03 Televising of Gravity Mains

A) Wherever possible, gravity mains shall be televised in the downstream direction.

B) Sufficient water shall be run through each section of main until water runs through each downstream manhole no more than 24 hours prior to televising. Lines that are dry or that enough water has not run through to reach the downstream manhole shall not be televised.

C) Gravity mains shall be televised from manhole to manhole utilizing a 360-degree pan and tilt color camera driven through at a moderate rate of speed not more that 30 feet per min. The camera shall be of the self-propelled tractor type with a measuring device mounted to the front capable of being read as the tractor moves and capable of accurately measuring depth of standing water up to, and including, three inches.

D) Begin video recording at the top of the manhole to see the condition of the manhole and any pipe that is connected to the manhole. Record going down into the manhole all the way to the preset footage with continuous recording until the down stream manhole.

E) Lighting should be set to allow for clear visibility without excessive reflection and should allow realistic colors to be visible.

F) The iris of the camera should be adjusted to allow for a sharp focused image and the lens should be kept clean and free of obstructions.

G) The operator should follow the manufacturer's instructions to achieve the proper color correction.

H) All notes or coded references shall have footages recorded with them

I) The camera should be centered within the pipe.

J) The distance between manhole centers shall be accurate within 0.5 percent.

K) The camera shall be stopped at all laterals adjusted for a clear picture and an orbital scan of the lateral taken pausing at the invert at the service lateral to detect dirt or infiltration.

L) All laterals shall be televised when reaching the lateral if a launch type camera is utilized.

M) The camera shall also be stopped at any suspected or confirmed defects, the focus properly adjusted and a clear digital video taken.

N) Areas suspected of leaking shall be paused long enough to determine if a leak exists currently or if deposits have occurred.

O) A digital photo shall be taken of all areas noted on the report including laterals and any confirmed or suspected defects.

P) Manholes upstream and downstream shall be measured from rim to invert and the depth recorded on the inspection header in feet and inches.

Q) Manhole material and defects shall be noted.

R) Manholes that have laterals tied into them shall have sufficient water run through them and then a CCTV inspection to the property line will be conducted.

28.07.03.04 CCTV QA/QC Inspection Procedures and Causes for Rejection of CCTV Work

A) The CONTRACTOR shall submit their Quality Assurance Plan and Quality Control procedures to the City of Ocoee. The CONTRACTOR shall ensure data quality and submit the results of the internal quality control checks performed on submitted data.

28.07.03.05 Gravity Main Inspection CCTV Report

A) The CONTRACTOR will be required to submit the following deliverables on a weekly basis.

1. Inspection Reports are to include:

a) Inspection session header information (see required fields in Section 2.02 above)
b) Defect log report including photo captures from CCTV video
c) Schematic drawing of pipe showing defects
d) Format: Adobe Acrobat PDF files – 1 report PDF per pipe with the following
e) File name format: <upstream MH ID>_<downstream MH ID>_<Date
f) (year_mo_day format)>.PDF
g) Example: 30060002_30060001_2010_02_16.pdf

B) The CONTRACTOR shall submit quality control forms that include a hard copy print out of the inspection reports checked with errors and omissions clearly marked

C) Inspection video files on DVD or portable hard drive, labeled as follows: DVD/Hard drive Labels - Typed labels shall be attached to the face of each DVD. The typed index labels shall include the following information:

1. Content (CCTV)

2. Contractor name

3. Purpose of Survey

4. Tributary Pump station number

5. Reaches included (from Manhole Number ## to Manhole Number ##)

6. Date of survey

7. Contract Number / Delivery Order Number (if applicable)

a) Electronic Inspection Data stored and exported in a NASSCO Pipeline
b) Assessment and Certification Program (PACP) compliant Microsoft Access
c) database (.MDB) version 4.4 delivered on DVD or portable hard drive.
d) Inspection photograph digital files (jpeg) indexed to NASSCO PACP
e) compliant database.

28.07.03.06 Causes for Rejection of Gravity Mains

A) The CONTRACTOR shall be required to replace the pipeline if the CCTV inspection reveals cracked, broken or defective pipe, and/or in the case of PVC pipe if a ring deflection is in excess of five percent (5%).

B) Joint separation shall be no greater than one inch between the spigot and bell of the pipe or as required by the pipe manufacture.

C) No evidence of leakage will be acceptable for private gravity mains connecting to the City of Ocoee's collection system.

D) Misalignment resulting in vertical sags in excess of ¾ " will require replacement of the gravity main.

E) The following NASSCO PACP codes or notes shall be cause for rejection of gravity sewer systems

1. PACP coding of "Line" (L) shall be accompanied by a measurement of the line, grade or angular deviation. Variance of established line and grade at any point along the length of the pipe shall not be greater than 1 inch, provided such variation does not result in a level or reverse sloping invert. An approved method shall be used to determine this deviation. A PACP coding of MWLS with a percentage of pipe greater than 12.5% on 8-inch sewer, 15% on 10-inch sewer etc. will be corrected by excavation and repair.

2. PACP coding of "Infiltration" (I) for pipe joints shall be replaced or the pipe joint shall be reseated at the joint. Grouting shall not be considered a method of repair and will not be accepted. Replace the leaking gravity main segment if there is visible infiltration at any point other than the pipe joint.

3. Any PACP coding in the category of "Structural Family".

4. PVC pipe having ID tears will be rejected.

5. PACP condition grading of "OB" (obstruction) in pipe shall be rejected, the obstruction shall be removed and the line cleaned and re-televised.

28.07.03.07 Acceptance

A) Successful passage of both the leakage test and CCTV inspection is required before acceptance by the City of Ocoee.

B) Prior to repair or replacement of failed sewer pipe, the method of repair or replacement shall be submitted to the City of Ocoee for approval. Pressure grouting of pipe or manholes shall not be considered as an acceptable method of repair.

Section 28.08 TESTING PRIOR TO SURFACING

28.08.01 General

All tests shall be completed and accepted by the City Engineer before any trench or pavement is asphalted. Contractor shall provide all testing equipment and material. Lines shall be televised to determine if they were acceptably constructed. Lines to be dedicated to the City and private lines shall be televised by a reputable company experienced in sewer examination. The Contractor shall be present to note required corrections, if any, and schedule remedial action prior to acceptance by the City. In all cases, a stabilized driving surface shall be prepared to allow access to all manholes by TV inspection trucks. The cost of the TV inspections shall be borne by the Contractor installing the line.

28.08.02 Test Procedure

A) All gravity sanitary sewer collection lines and manholes, public and private, which are directly connected to the City collection system shall be tested to insure the minimal exfiltration of wastewater and infiltration of groundwater and stormwater. Lines and manholes shall be tested by either exfiltration and/or infiltration. In the event the exfiltration and/or infiltration test cannot be taken or is inconclusive, the City Engineer at his sole discretion may require a low pressure air test of all or portions of the gravity sewer to be put in service.

B) Line and manholes must be cleaned of all material and meet all other conditions as described by this ARTICLE before proceeding with a test.

C) Exfiltration Test: Where groundwater at the time of testing is near the lowest invert of gravity system to be tested, a passing exfiltration test is required. Exfiltration loss shall not exceed 100 gallons per inch of diameter of pipe per mile tested after a two (2) hour duration.

D) Infiltration Test: Test sewer system when piping is submerged in groundwater above crown of pipes. Infiltration loss shall not exceed 100 gallons per inch diameter of pipe per mile tested after two (2) hours duration.

E) Measured Loss: Exfiltration or infiltration loss shall be measured by summing the volumes lost in all test sections of the manholes and pipe.

F) The low pressure air test method shall be in accordance with ASTM F1417-90 (most current version). Line must be slowly pressurized to four (4) psig (10 psig relief valve required) and hold for two (2) minutes and then slowly release to obtain a pressure to 3.5 psig. Line pressure must not experience a pressure drop greater than 1 psi during the specified testing interval per the following table.

Table 28-3

Pipe Diameter (In.)	Minimum Test Interval Minutes	Length for Minimal Time (Feet)	Time for Longer Lengths (Feet)
8	7:34	298	1.520 x Length
10	9:26	239	2.374 x Length
12	11:20	199	3.418 x Length
15	14:10	159	5.342 x Length
16	15:10	149	6.282 x Length
18	17:00	133	7.692 x Length

In the event no pressure loss is experienced within half the test interval specified, the test can be discontinued.

G) Test Sections: Test sections shall be divided to ensure proper testing method. In test sections where groundwater influence cannot be determined, the City Engineer may require both exfiltration and infiltration tests.

Section 28.09 FINAL INSPECTION

After all manholes are raised to grade and paving operations are completed, a final visual inspection shall be made by the City Engineer or his Designee. All manholes shall be examined for proper grade and water tightness. The Contractor shall assist the City Engineer or his Designee by providing all labor as required. The Contractor shall make note of any corrections required and shall perform all remedial actions prior to the acceptance by the City.

Section 28.10 GREASE INTERCEPTORS

The City of Ocoee has a pretreatment program that requires all new sewer usages to comply with all applicable requirements and regulations.

Section 28.11 IDENTIFICATION

For connections of gravity sewer smaller than 12” to pipes larger than 12”, the connecting shall be made using a manhole. The crown elevation of the smaller pipe will be required to match the crown elevation of the larger pipe.

ARTICLE 29

SANITARY SEWER FORCE MAINS

Index

29.01 GENERAL
29.02 DESIGN CRITERIA
29.03 MATERIALS
29.04 VALVES
29.05 INSTALLATION
29.06 IDENTIFICATION
29.07 HYDROSTATIC TESTING

BACK TO TABLE OF CONTENTS

Section 29.01 GENERAL

This ARTICLE shall govern the design and construction of force mains including valves, fittings, and other appurtenances.

Pipe used in wastewater force main systems shall be either Polyvinyl Chloride (PVC). Ductile Iron Pipe (DIP) or HDPE/Directional Drill may be allowed if prior approval is obtained from the City.

The Contractor shall be responsible for all materials furnished and storage of the same until the date of substantial completion. At the Contractor's expense, all materials found to be defective or damaged in handling or storage shall be replaced. The Contractor shall, if requested by the City, furnish certificates, affidavits of compliance, test reports, or samples for check analysis for any of the materials specified herein. All pipe delivered to project site for installation is subject to random testing for compliance with the designated Specifications.

Section 29.02 DESIGN CRITERIA

29.02.01 Design Period

Force main systems shall be designed for the estimated ultimate tributary population, as derived from the City's approved future land uses and/or historical flows. In the event the approved City of Ocoee Wastewater Master Plan, latest edition, identifies components of the force main under consideration, the largest capacity consideration shall be required.

29.02.02 Design Calculations

Owner's/Developer's Engineer shall submit signed, sealed and dated design calculations with the plans for all force main projects. Calculations shall show that force mains will have sufficient hydraulic capacity to transport all design flows. The Design Flow shall be the Peak Flow Rate.

29.02.03 Sanitary Sewer Collection System Hydraulic Modeling

The City of Ocoee maintains a sanitary sewer collection hydraulic model (Bentley SewerCAD) which is used for but not limited to determining system performances, pump runtimes and efficiencies, and offsite impacts. For developments that may substantially add to or impact the City sanitary sewer collection system, the Owner/Developer shall cause the incorporation of the development elements into the City's model and the simulation/analyzing of the model. Unacceptable operating conditions and/or offsite impacts created by the proposed development shall be remediated by the Owner/Developer.

This effort to be undertaken by Owner/Developer can be done by either the developer's engineer performing the model work with a City review or by electing to have the City undertake the work. The election for the City to perform the work shall require City approval. All costs incurred by the incorporation and outside reviews by the City shall be at the Owner/Developer's expense. All final products shall become the property of the City.

29.02.04 Velocity and Diameter

At design pumping rates, a cleansing velocity of at least 2 feet per second shall be maintain/Achieve. Maximum velocity at design pumping rates shall not exceed 5 feet per second. The minimum force main diameter shall be 4 inches with the exception of 2" sleeved applications in conjunction with the application of a minor lift station. Only 4", 6", 8", 10", 12", 16", 20", 24", 30", 36", 42", 48" and 54" diameter force mains shall be permitted.

29.02.05 Design Friction Losses

Friction losses through force mains shall be based on the Hazen-Williams formula. In the use of Hazen-Williams formula, the value for "C" shall be 100 for ductile iron pipe, 120 for PVC pipe and HDPE pipe. When initially installed, force mains may have a significantly higher "C" factor. The higher "C" factor shall be considered only in calculating maximum power requirements and duty cycle time of the motor.

29.02.06 Design Pressure and Restraint

The force main and fittings, including all restrained joint fittings and thrust blocking, shall be designed to withstand pump operating pressures and pressure surges, but not less than 150 psi. The required lengths of restrained joints shall be determined by the Engineer and shown in a tabular form as depicted on the "Restrained Pipe Table" in the Typical City Details attached as part of this Manual. Thrust blocks shall not be typical and shall only be used when the City Engineer deems it a hardship or good engineering standards deem it necessary because restraining assemblies are impractical or insufficient. If thrust blocks are used, the bearing area of thrust blocks shall be adequate to prevent any movement of the fitting. The sizes and dimensions of the thrust blocks shall be shown in a thrust block table.

29.02.07 Termination

Force mains shall not terminate directly into a gravity sewer line. Force mains shall enter the terminal facility, gravity sewer manhole, pumping station wet well or other, at a point equal to the operational water level of said receiving unit and not more than 1 foot above the flow line. Should an elevation drop be required to obtain the outlet connection, the prior down-slope of the force main shall not exceed 45°. Adequate air venting shall be provided at the profile break-point.

29.02.08 Air Release and Vacuum Relief Valves

Where the force main profile is such that air pockets or entrapment could occur, resulting in flow blockage, provisions for air release shall be provided. Automatic air release assemblies shall be installed, where venting is required, on all major force mains and at critical points on lesser mains. At profile break points on major force mains, such as tops of hills, etc., where free flow will occur during operation or after pumping stops, combined air release and vacuum valve assemblies shall be provided. Air and vacuum valves and/or air release valves shall be as capacity requires and, if in an open area, they shall be suitably housed in a properly vented, underground chamber (vault/manhole). All such valves shall be clearly delineated on the force main profile in the detail sheets. The Owner's/Developer's Engineer shall submit calculations to the City justifying the valve sizing.

29.02.09 Aerial Crossings

A) Structural Support

Support shall be provided for all joints in pipes utilized for aerial crossings. The supports shall be designed to prevent overturning and settlement.

B) Expansion Protection

Expansion joints shall be provided between the aerial and buried sections of the pipe.

C) Flood Clearance

For aerial stream crossings, the impact of flood waters and debris shall be considered. The bottom of the pipe shall be placed no lower than 1 foot above the 100 year flood elevation.

D) Pipe Material and Joints

Flanged joints shall be used. Pipe and flange material shall be a lined ductile iron, minimum class 53. All aboveground pipe shall be painted as specified in ARTICLE 29 of this Manual for aboveground wastewater force mains. Use of epoxy coated steel pipe may be allowed on a case-by-case basis.

E) Valves

Underground valves shall be provided at both ends of the crossing so that the section can be isolated for testing or repair. The valves shall be easily accessible and not subject to flooding. An air release/vacuum relief valve shall be installed at the high point of the crossing.

F) Guards

Appropriate guards shall be installed at both ends of the crossing to prevent pipe access to the public.

G) Permits and Requirements of Other Agencies

It shall be the responsibility of the Owner/Developer to obtain all applicable regulatory permits. When the Aerial Crossing is accomplished by attachment to a bridge or drainage structure, the Owner/Developer shall meet all requirements of the Agencies who own or have jurisdiction over such structures.

29.02.10 Underwater Crossings

A) Pipe Material and Cover

Underwater Crossings shall be directional drilled with HDPE pipe. Fusible PVC may be used with Specific Approval. The Owner/Developer shall provide, for City approval, a signed, sealed and dated design report. Report shall include but not be limited to a geotechnical report with installation recommendations. Both design and geotechnical reports must be signed, dated and sealed by a Florida licensed Professional Engineer.

B) Valves

Valves shall be provided at both ends of the water crossings so that the section can be isolated for testing or repair. The valves shall be easily accessible and not subject to flooding. Both valves shall be provided in a manhole or a valve vault.

C) Permits

It shall be the responsibility of the Owner/Developer to obtain all applicable regulatory permits, including dredge and fill permits and/or sovereign lands.

29.02.11 Additional Requirements

While designing force main systems, consideration shall be given to possible future connecting pumping stations. If applicable, this requirement shall be reviewed with the City prior to finalization of the design.

Section 29.03 MATERIALS

29.03.01 PVC Pipe

All PVC pipe of nominal diameter 4" through 12 inches shall be manufactured in accordance with AWWA standard C-900. The PVC pipe shall have a minimum working pressure rating of 150 psi and shall have a dimension ratio (DR) of 25. Pipe shall be the same OD as ductile iron pipe. PVC pipe shall be AWWA Standard C-900, DR 18.

29.03.02 PVC Joints

PVC pipe shall have integral bell push-on type joints conforming to ASTM D-3139.

29.03.03 Fittings for PVC Pipe

Fittings used with PVC pipe shall conform to Section 27.03.05.

29.03.04 Ductile Iron Pipe

All ductile iron pipe of nominal diameter 4 through 54 inches shall conform to ANSI/AWWA A-21.51/C-151. A minimum of Pressure Class 350 pipe shall be supplied for all sizes of pipe unless a higher class pipe is specifically called out or required by the City.

29.03.05 Fittings

All fittings shall be mechanical joint ductile iron or gray iron conforming to ANSI/AWWA A-21.10/C-110, 250 psi minimum pressure rating, or ductile iron compact fittings 4 through 12 inches in accordance with ANSI/AWWA A-21.53/C-153.

29.03.06 Joints for DIP

Joints for ductile iron pipe and fittings shall be push-on or mechanical joints conforming to ANSI/AWWA A-21.11/C-111, unless otherwise specifically called out or required by the City. Where called for on the Drawings, restrained or flanged joints shall be provided. Flanged joints shall conform to ANSI Standard B-16.1-125 lb restrained joints shall conform to ARTICLE 26 of this Manual.

29.03.07 Coatings and Linings for DIP

Where ductile iron pipe and fittings are to be below ground or installed in a casing pipe the coating shall be a minimum 1.0 mil thickness in accordance with ANSI/AWWA A-21.51/C-151. Where ductile iron pipe and fittings are to be installed above ground, the pipe, fittings and valves shall be thoroughly cleaned and given one field coat (minimum 1.5 mils dry thickness) of rust inhibitor primer. Intermediate and finished field coats of Alkyd shall also be applied by the Contractor (minimum 1.5 mils dry thickness each coat). Primer and field coats shall be compatible and shall be applied in accordance with the manufacturer's recommendations. (See approved Manufacturer's List attached as part of this Manual.) Final field coat color shall be green for raw wastewater.

All ductile iron pipe and fittings shall have interior protective lining of Protecto 401 shall be provided with a minimum dry thickness of 40 mils or equivalent applied by the pipe manufacturer.

29.03.08 Polyethylene Encasement

The pipe shall be polyethylene encased (8 mil) where shown in the Typical City Details or required by the City in accordance with ANSI/AWWA A-21.51/C-105.

29.03.09 Directional Drill/HDPE

HDPE pipe shall be used for directional drill application. See ARTICLE 33 for requirements.

Section 29.04 VALVES

Sufficient valves shall be provided on force main systems to facilitate effective isolation of the pipe system for repairs and maintenance. On straight runs of force mains, valve spacing shall not exceed 1,000 feet. Additional valves shall be provided where force mains intersect to facilitate isolation of pipe segments.

29.04.01 Plug Valves

Plug valves shall have a semi-steel body, non-lubricated, eccentric type, 100% port opening with resilient faced plugs capable of drip-tight, bi-directional, shut-off at the full rated pressure. Exposed valves shall have flanged connections. Buried valves shall have mechanical joint connections. Gear actuators for valves 8 inches or larger shall be provided.

29.04.02 Check Valves

Check valves shall have an iron body, bronze-mounted, stainless steel hinge pin, outside spring operated, swing non-slam type, equipped with removable inspection covers. Units shall be rated for 150 psi minimum working pressure and permit full flow area equal to that of the connecting pipe.

29.04.03 Air Release Valves

Air release valves shall have a polimer or stainless steel body, minimum 150 psi working pressure, equipped with a vacuum ball to prevent air return and a properly sized blow off valve. All pipe, hardware, and isolation ball valves shall be per Standard Manufacturer's List Detail.

29.04.04 Tapping Sleeves and Valves

Tapping Sleeves shall be a joint type with flanged outlet per ANSI B-16.1, Class 125. Valves shall be gate valves specially designed for wet tapping and compatible with the connecting sleeve.

29.04.05 Valve Boxes

Valve boxes shall be adjustable, cast iron and suitably sized to the valve with a minimum diameter of 5 inches. The cover shall have the word "SEWER" legibly cast into the face. Boxes shall be suitable for H-20 loading.

Section 29.05 INSTALLATION

29.05.01 General

Excavation and backfill including sheeting and bracing, dewatering, bedding and foundation, and furnishing and disposal of materials shall be as required in ARTICLE 6 Table 6-1of this Manual.

29.05.02 Pipe Laying

All pipe shall be laid "in-the-dry" along straight lines and grades between fittings, manholes, or other defined points, unless definite alignment deflections or grade changes are necessary. The standard minimum cover for sewage force main systems shall be 3 feet from the top of the pipe to finished grade. Where waterways, canals, ditches, or other cuts are crossed, either jack and bore, or directional drill shall be required. Additionally, approved utility crossing signs shall be placed on the pipe alignment at each side of the canal, etc. All materials shall be maintained and all coatings shall be protected from damage and kept clean. The interior of the pipe shall be maintained clean and free of dirt and debris. When work is not in progress, plug all open ends. Underground piping shall not be driven to grade by striking it with an unyielding object. Bell holes in the bedding shall be provided to allow uniform load bearing along the pipe barrel.

29.05.03 Push-on Joints

The pipe bell and spigot shall be thoroughly cleaned immediately prior to inserting the gasket and jointing. The gasket shall be properly faced and positioned. Lubrication shall be in accordance with the manufacturer's recommendations. Pipe shall be protected against damage from jointing equipment by using timber headers, etc.

29.05.04 Mechanical Joints

The socket and plain end shall be wiped clean. The plain end, socket, and gasket shall be washed with a soap solution immediately prior to jointing. The joint shall be kept straight during assembly with the gasket pressed firm and even into the recess. Bolts shall be tightened such that the gland remains reasonably parallel to the flange by alternating from bolt to bolt in cycles. The required bolt size (pipes 4 inches to 24 inches in diameter) shall be ¾ inches, torqued to 75-90 ft-lbs.

29.05.05 Flange Joints

Make all flanged joints tight, without applying undue strain upon the joint or other appurtenances. Joints shall be fitted such that contact surfaces bear uniformly on the gasket with relatively uniform bolt stresses.

29.05.06 Connections at Structures

Where pipes are to extend into or through structures, Link Seal-Type penetration seals shall be provided at the wall face. Openings in existing structures shall be made with a circular core boring machine.

29.05.07 Pipe Cutting

Cutting of pipes for the insertion of valves, fittings, or closure pieces shall be done in a neat, workmanlike manner without damaging pipe coatings or linings. The pipe shall be cut with an abrasive pipe saw, rotary wheel cutter, guillotine pipe saw, or milling wheel saw. Cut ends and rough edges shall be ground smooth and, for push-on joint connections, the cut end shall be beveled. Where castings or linings have been damaged, apply two coats of a Coal Tar/Bitumastic Coating. Where protective linings are provided within the interior of the pipe, repair of the lining shall be completed in accordance with the lining manufacturer's recommendations. All coatings and lining materials shall be in accordance with the Approved Manufacturer's List.

29.05.08 Pipe Restraint

All plugs, caps, tees, and bends, unless otherwise specified, shall be restrained by the use of approved restraint glands, and/or restrained joints. Components of dissimilar metal shall be protected against corrosion by hand application of a bituminous coating. Backfilling over pipe restraints shall not proceed until inspected by the City Engineer or his Designee. Thrust blocks shall not be typical and shall only be used when the City Engineer deems it a hardship or good engineering standards deem it necessary because restraining assemblies are impractical or insufficient. If thrust blocks are used, the bearing area of thrust blocks shall be adequate to prevent any movement of the fitting. The sizes and dimensions of the thrust blocks shall be shown in a thrust block table.

29.05.09 Polyethylene Encasement

Extra protection shall be provided for underground cast or ductile iron pipe and fittings within areas of severe corrosive conditions. This shall be accomplished by the installation of polyethylene encasement through the area of concern. The soil-test evaluation to determine the necessity for extra protection in suspect areas shall be as set forth in ANSI Standard A-21.5.

29.05.10 Aboveground Pipe Support

Support exposed systems, as necessary, to hold the piping and appurtenances in a firm substantial manner to the required lines and grades with no undue piping stresses transmitted to the equipment. All above ground pipe, outside of buildings, shall be supported by concrete supports.

29.05.11 Connections

Tapping shall be by tapping sleeve and valve installed with a tapping device designed for the pipe material.

29.05.12 Valve Installation

Valves shall be installed on all subsidiary force mains at the point of connection to the major main, in order to isolate said pipeline for maintenance. Where force mains are to be extended, valves shall be placed at the future connection points so as to preclude line shut-down at the time of extension. All valves shall be opened wide and then tightly closed. Nuts and bolts shall be inspected for tightness. Special care shall be taken to prevent joint materials, stones, and other substances from becoming lodged in the valve seat. Any valve that does not operate correctly shall be replaced.

Unless otherwise noted, set valve stems vertically above the center-line of the pipe. Where extension stems are required within valve boxes, insert stems shall be provided.

29.05.13 Valve Boxes

All valve boxes shall be centered over the operating nut of underground valves to permit a valve wrench to be easily fitted to the nut. Top of boxes shall be set to final grade. The valve box shall not transmit surface loads directly to either the pipe or valve. Excessive care shall be used to prevent earth and other materials from entering the boxes. Any valve box that becomes out of alignment or is not to grade shall be dug out and adjusted. A concrete collar shall be provided as specified in the Typical City Details attached as part of this Manual.

29.05.14 Air and Vacuum Valves

Where the force main profile is such that air pockets or entrapment could occur, resulting in flow blockage, provisions for air release shall be provided. Automatic air release assemblies shall be installed, where venting is required, on all major force mains and at critical points on lesser mains. At profile break points on major force mains, such as tops of hills, etc., where free flow will occur during operation or after pumping stops, combined air release and vacuum valve assemblies shall be provided. Air and vacuum valves and/or air release valves shall be as capacity requires and, if in an open area, they shall be suitably housed in a properly vented, underground chamber (manhole).

29.05.15 Terminal Discharge

Force mains shall not terminate directly into a gravity sewer line. Force mains shall enter the terminal facility, gravity sewer manhole, pumping station wet well or other, at a point equal to the operational water level of said receiving unit and not more than 1 foot above the flow line. The receiving manhole shall be either lined with an approved liner or be constructed of an approved material that prevents degradation due to the creation of gas in the structure. Should an elevation drop be required to obtain the outlet connection, the prior down-slope of the force main shall not exceed 45°. Adequate air venting shall be provided at the profile break-point.

Section 29.06 IDENTIFICATION

In order to preclude possible domestic water tapping, all installed underground PVC sanitary sewer force mains shall be green in color. DIP or HDPE pipe shall be marked with a continuous stripe painted in accordance with 62-655-320 (21) (b) 3 F.A.C. Said stripe shall be a minimum 2 inches in width and shall be green in color. Backfill shall not be placed for 30 minutes following paint application. In addition, all pipe shall be buried with non-metallic warning/identification tape above the top of the pipe, see the Typical City Details. The tape shall indicate the presence of a sanitary force main plainly on the tape face. PVC pipe shall be buried with a locating wire properly affixed to the main.

Section 29.07 CROSS CONNECTION CONTROL

In order to protect the public water supply system from contamination due to cross connections, the Developer shall install City approved backflow prevention devices where there is the potential of a non-potable substance coming into contact with the public water system. All backflow prevention devices shall comply with the City of Ocoee's Manual of Cross Connection Control and the Foundation for Cross Connection Control and Hydraulic Research, University of Southern California (FCCCHR)

Section 29.08 HYDROSTATIC TESTING

This test shall be performed by the Contractor, with the Contractor's labor and equipment, in the presence of the City Engineer or his Designee. No testing shall proceed until all restraining devices are installed or thrust blocks have cured. Clean and flush all piping thoroughly prior to testing. The amount of water to be used shall be twice the volume of the pipe being tested and the velocity of flow shall be a minimum of 3 fps. During filling of water, all air shall be carefully permitted to escape through release cocks installed as required.

The hydrostatic test shall be performed at 150 psi for a period of 2 hours per AWWA C-600. The maximum allowable leakage shall not exceed that determined by the following formula:

$$L = \frac{(N)\,(D)\,(P)^{.5}}{3700} = \text{Allowable leakage in gals per 2 hr}$$

L = 0.00270 ND; for 100 psi test for 2 hours

N = Number of joints in the section tested

D = Nominal pipe diameter in inches

P = Average test pressure maintained during the leakage test in psig (gauge)

During the 2 hour period of the test, the Contractor shall maintain a continuous pressure of 150 psi by means of a pump taking supply from a container suitable for the measurement of water loss. Should the test fail, the leak shall be located and repaired and the test performed again until it meets the above specified limits.

ARTICLE 30

SANITARY SEWER PUMP STATION

Index

30.01 GENERAL
30.02 SITE
30.03 BUOYANCY
30.04 EXCAVATION AND BACKFILL
30.05 GRADING
30.06 HANDLING
30.07 WET WELLS
30.08 PIPE, VALVES AND FITTINGS
30.09 PUMPS
30.10 MOTORS
30.11 SHOP PAINTING
30.12 TELEMETRY SYSTEMS
30.13 ELECTRICAL POWER AND CONTROL SYSTEM
30.14 LIGHTS AND ALARMS
30.15 ELECTRICAL GROUNDING SYSTEM
30.16 STANDBY POWER GENERATOR SYSTEM
30.17 FENCING
30.18 TOOLS AND SPARE PARTS
30.19 PUMP STATION WATER SYSTEM
30.20 INSPECTION AND TESTING
30.22 LIFT STATION SERVICES
30.21 REQUIRED SUBMITTALS
30.22 MINOR LIFTSTATION

BACK TO TABLE OF CONTENTS

Section 30.01 GENERAL

This ARTICLE shall govern the design, construction and application of all wet pit sewage pumping stations, typical and minor, to include the wet well, influent piping from receiving manhole, effluent piping (to the wye), valves, valve boxes and covers, pumps and motors, hatches, bypass pumping appurtenances, control panel, flow meter, telemetry system, electrical service and wiring, and testing for a complete installation ready to operate. Design and layout of the system must be approved by the City Engineer or his Designee prior to construction. The system shall be designed and sized for peak flow.

Section 30.02 LIFT STATION STANDARDS AND THIS ARTICLE

The City maintains both Major and Minor Lift Station Standards and Details that shall be used in conjunction with ARTICLE 30 to establish the requirements for any lift stations to be dedicated to or constructed by the City. Any conflicts between ARTICLE 30 and the standard details shall be resolved in the more stringent criterion and/or requirement.

Section 30.03 SITE

Pump station sites shall be sized as delineated in the Typical City Details attached as part of this Manual. Owner/Developer shall dedicate pump station site by warranty deed or plat to the City. Dedicated easements shall also be required around the site as delineated in the Typical City Details attached as part of this Manual. In general, the site for the paved access road shall also be dedicated to the City by warranty deed or plat. Exceptions to this requirement may be allowed by the City Engineer or his Designee on a case by case basis in the form of an ingress/egress easement for the access road. The pumping station shall be readily accessible by maintenance vehicles during all weather conditions. All access to the pumping station shall be paved. The facility shall not be located in road rights-of-way. In a phased development, a stabilized access road may be accepted during the initial phase with paving to be accomplished in the later phase.

Wastewater pumping station structures and electrical and mechanical equipment shall be protected from physical damage by the 100 year flood by setting the top slab elevation a minimum of one foot above the 100 year flood elevation determined for the site and shall not be located within the flood way. Wastewater pumping stations shall remain fully operational and accessible during the 100 year flood event. Regulations of Local, State and Federal agencies regarding flood plain obstructions shall be considered.

Section 30.04 BUOYANCY

Buoyancy of the pump station structures shall be considered and adequate provisions shall be made for protection. Signed and sealed calculations shall be provided to the City by the Design Engineer.

Section 30.05 EXCAVATION AND BACKFILL

Excavation and backfill (including sheeting and bracing), dewatering, bedding and foundation, and furnishing and disposal of materials shall be as required in ARTICLE 6, Table 6-1.

Section 30.06 GRADING

The site shall be graded so as to direct runoff away from structures and appurtenances and electrical system. Pavement slopes shall not be less than 0.6% or exceed 2% within station confines. Earth grading extending from pavement for the first 10 feet shall not exceed 10: 1 cross slope and thereafter not exceed 3:1.

Section 30.07 HANDLING

All parts and equipment shall be properly protected so that no damage or deterioration will occur during a prolonged delay from the time of shipment until installation is completed and the units and equipment are ready for operation. Finished surfaces of all exposed pump openings shall be protected by wooded planks, strongly built and securely bolted thereto. Finished iron or steel surfaces not painted shall be properly protected to prevent rust and corrosion.

Section 30.08 WET WELLS

Wet wells shall be to the same requirements as sanitary sewer manholes with the following additional requirements:

A) The base shall be monolithic with lower ring.

B) The base slab and top slab shall be constructed to the dimensions specified in the Typical City Details attached as part of this Manual. The wall thickness and inside diameter of the wet well shall be constant over its full depth. Generally, the minimum acceptable inside diameter for a wet well shall be 6 feet, however sufficient space for installed equipment, required suction pipe submergence and spacing shall be provided. A minimum of 24 inches between shut off and lead pump start levels shall be provided. Low water level shall provide adequate submergence to prevent pump inlet from vortexing, air binding, or other operational problems.

C) A minimum 5 foot depth from the lowest invert and the off Float shall be provided.

D) The maximum high water level shall be less than the low pipe influent invert, with the high water alarm no higher than the mid-depth point of said pipe.

E) Brick construction shall not be acceptable.

F) Wet well shall be free from all detectable leaks. Any leaks detected shall be corrected prior to acceptance by the City.

G) Coating per the Approved Manufacturer's List.

H) All concrete sanitary wetwells shall be lined with spray on Green Monster ™ Liner at a 90 to 110 mil thickness or approved equal approved by the City.

Section 30.09 PIPE, VALVES AND FITTINGS

30.09.01 General

All exposed pipe shall have flanged joints with 316 stainless steel bolts with stainless steel plastic inserted nylock nuts. All buried pipes shall have restrained joints. All exposed metallic piping shall be coated with an approved material refer to Approved Manufacturer's List. The riser pipe from the pump base to the valve vault shall be fusion welded HDPE and shall be joined to the equipment with the proper fusion welded flange adapters and shall include support as specified in the Typical City Details attached as part of this Manual.

30.09.02 Pipe Material

All piping from valve box to one (1) joint past wye including bypass pumping extension shall be ductile iron pipe. Pipe material from receiving manhole to wetwell shall be HDPE of equal inside diameter to pipe entering receiving manhole.

Section 30.10 PUMPS

30.10.01 General

The equipment covered by these Specifications is intended to be standard pumping equipment of proven ability as manufactured by a reputable firm having at least 5 years experience in the production of such equipment. The equipment furnished shall be designed, constructed, and installed in accordance with the best practices and methods, and shall operate satisfactorily when installed as specified in the Typical City Details attached as part of this Manual.

Pumps shall be submersible and of a dual rail system - dual rail pumps with dual rails. Pump station shall be capable of pumping the peak design flow with any one pumping unit out of service. Pumps shall be capable of meeting all system hydraulic conditions without motors overloading. In addition, a minimum 5 HP motor shall be required. Head-capacity (performance) curves shall verify that pumps are operating at peak efficiency for application. The system head-capacity analysis shall provide the following and be subject to review by the City Engineer or his Designee:

A) System operation under peak flow conditions, with one pump or multiple parallel pumping, as designed. If the receiving force main system is interconnected to additional pumping stations, hydraulic modeling conditions shall also include said pumping systems operating at rated capacity.

B) Pumping capability with one pump running, all units operating in parallel and other combinations, if applicable.

C) Design engineer shall provide Hydraulic Analysis for peak, average and low pressure conditions and verify that new station will not adversely impact existing stations.

All parts shall be so designed and proportioned as to have liberal strength and stiffness, and to be especially adapted for the work to be done. Ample space shall be provided for inspection, repairs, and adjustment. All necessary foundation bolts, plates, nuts, and washers shall be furnished by the equipment manufacturer, and shall be of Type 316 stainless steel. Brass or stainless steel nameplates giving the name of the manufacturer, voltage, phase, rated horsepower, speed, and any other pertinent data shall be attached to each pump. The nameplate rating of the motors shall not be exceeded.

Two pumps shall be required for all stations discharging 2,000 gallons per minute or less. Additional pumps shall be required as necessary for larger flows. A minimum 5 minutes run time and no more than 8 successive starts of pumps must be maintained for peak flow conditions. Pumps shall alternate operation automatically. The pumps shall be capable of handling raw unscreened domestic wastewater and minimum 3 inch diameter solid spheres. Pump operation shall be controlled automatically by means of a SCADA Control System with a float back-up system. Pumps shall be mounted in the wet well as specified in the Typical City Details attached as part of this Manual. See approved Manufacturer's List attached as part of this Manual. For approved pumps and SCADA equipment.

30.10.02 Installation

Equipment shall be installed in accordance with approved shop drawings and manufacturer's instructions to operate as intended by the manufacturer. Shop drawings shall be sent to the Engineering Department for review prior to installation of equipment. Upper guide rail holders shall be located exactly as required.

A) Shaft

The pump shaft shall be of Series 300 or 400 series stainless steel or carbon steel. When a carbon steel shaft is provided, the manufacturer shall demonstrate that any part of the shaft which will normally come in contact with the wastewater has proven to be corrosion resistant in this application. The shaft and bearings shall be adequately designed to meet the maximum torque required for any start-up or operating condition and to minimize vibration and shaft deflection. As a minimum, the pump shaft shall rotate on 2 permanently lubricated bearings. The upper bearing shall be a single row ball bearing. The lower bearing shall be a 2 row angular contact ball bearing, if required, to minimize vibration and provide maximum bearing life.

B) Impeller

The impeller shall be constructed of gray cast iron, ASTM A-48, class 30. All external bolts and nuts shall be of Type 304 stainless steel. Each pump shall be provided with a replaceable metallic wear ring system to maintain pump efficiency. As a minimum, one stationary wear ring provided in the pump volute or one rotating wear ring provided on the pump impeller shall be required. A two part system is acceptable.

C) Mechanical Seal

Each pump shall be provided with a tandem double mechanical seal running in an oil reservoir, composed of two separate lapped face seals, each consisting of one stationary and one rotating tungsten carbide ring with each pair held in contact by a separate spring, so that the outside pressure assists spring compression in preventing the seal faces from opening. The compression spring shall be protected against exposure to the pumped liquid. Silicone carbide may be used in place of tungsten carbide for the lower seal. The pumped liquid shall be sealed from the oil reservoir by one face seal and the oil reservoir from the air-filled motor chamber by the other. The seals shall require neither maintenance nor adjustment, and shall be easily replaceable. Conventional double mechanical seals with a single spring between the rotating faces, requiring constant differential pressure to effect sealing and subject to openings and penetration by pumping forces shall not be considered equal to tandem seal specified and required.

D) Guides

A sliding guide bracket shall be an integral part of the pump casing and shall have a machined connecting flange to connect with the cast iron discharge connection, which shall be bolted to the floor of the wet well with stainless steel anchor bolts and so designed as to receive the pump discharge flange without the need of any bolts or nuts. Sealing of the pumps to the discharge connection shall be accomplished by a simple linear downward motion of the pump with the entire weight of the pumping unit guided by no less than 2 Type 316 seamless tubular stainless steel guides per pump, which will press it tightly against the discharge connection. No portion of the pump shall bear directly on the floor of the wet well and no rotary motion of the pump shall be required for sealing. Sealing at the discharge connection by means of a diaphragm or similar method of sealing shall not be accepted as an equal to a metal to metal contact of the pump discharge and mating discharge connection specified and required. Approved pump manufacturers, if necessary to meet the above specification, shall provide a sliding guide bracket adapter. The design shall be such that the pumps shall be automatically connected to the discharge piping when lowered into place on the discharge connection. The pumps shall be easily removable for inspection or service, requiring no bolts, nuts or fastenings to be removed for this purpose, and no need for personnel to enter the wet well. Each pump shall be fitted with a minimum ¼ inch 316 stainless steel cable, air craft rating, to remove the pumps from the wet well. The cable shall be of sufficient size to accommodate removal of the pump without breaking.

30.10.03 Pump Warranty

The pump manufacturer shall warrant the units being supplied to the City against defects in workmanship and material for a period of 5 years or 10,000 hours.

Section 30.11 MOTORS

30.11.01 General Requirements

All motors shall be built in accordance with latest NEMA, IEEE, ANSI and AFBMA Standards and be UL listed where applicable. Pump motors shall be housed in an air-filled, water-tight casing and shall have Class F insulated windings which shall be moisture resistant. Motors shall be NEMA Design B, rated 155°C maximum. Pump motors shall have cooling characteristics suitable to permit continuous operation, in a totally, partially or non-submerged condition. The pump shall be capable of running continuously in a non-submerged condition under full load without damage, for extended periods. The motor shall be capable of a minimum of 10 starts per hour. If required by the City, and before final acceptance, a field running test demonstrating this ability, with 24 hours of continuous operation under the above conditions, shall be performed for all pumps being supplied. Motors below 20 horsepower shall be rated 240/480 volt, 3 phase. Motors 20 horsepower and greater shall be 480 volt, 3 phase.

30.11.02 Heat Sensors

Each motor shall incorporate a minimum of 1 ambient temperature compensated overheat sensing device. This protective device shall be wired into the pump controls in such a way that if excessive temperature is detected the pump will shut down. This device shall be self-resetting.

30.11.03 Cables

Cables shall be designed specifically for submersible pump applications and shall be properly sealed. The cable entry junction chamber and motor shall be separated by a stator lead sealing gland or terminal board, which shall isolate the motor interior from foreign material gaining access through the pump top. Sealing systems utilizing epoxy potting compounds may be used. All cables shall be continuous without splices from the motor to the control panel, unless otherwise approved by the City.

The junction chamber, containing the terminal board, shall be perfectly leak proof.

Section 30.12 SHOP PAINTING

Before exposure to weather and prior to shop painting, all surfaces shall be thoroughly cleaned, dry and free from all mill-scale, rust, grease, dirt and other foreign matter. All pumps and motors shall be shop coated with a corrosion resistant paint proven to withstand an environment of raw wastewater. All nameplates shall be properly protected during painting.

Gears, bearing surfaces, and other similar surfaces obviously not to be painted shall be given a heavy shop coat of grease or other suitable rust-resistant coating. This coating shall be maintained as necessary to prevent corrosion during periods of storage and erection and shall be satisfactory to the City up to the time of the final acceptance test.

Section 30.13 TELEMETRY SYSTEMS

Telemetry systems shall be provided on all public stations. The system shall be the newest version of the radio transmission unit Hyper Server Module from Data Flow Systems. System shall be able to monitor/calculate such information as flow rates, cycle times and ambient/run system pressures as well as proving control for the station.

Section 30.14 ELECTRICAL POWER AND CONTROL SYSTEM

30.14.01 General

This Section specifies the electrical power and control system requirements for wastewater pump stations. These requirements apply to duplex pump panels. Similar requirements shall apply when more than 2 pumps are involved except for the quantity of control equipment and panel size shall be increased accordingly. The manufacturer of the control panel shall provide data to indicate that the manufacturer has a minimum of 3 years experience in the building of pump control panels.

Lightning arrester, surge suppressor, pump disagree sensors, emergency disconnect switch, telemetry system, flow meter and totalizer, emergency generator plug, red alarm light, and convenience outlet shall be provided as specified in the Typical City Details attached as part of this Manual.

30.14.02 Control Panel

A pump station control panel shall be provided for each wastewater pump station. (See approved Manufacturer's List attached as part of this Manual.) The control panel shall be factory assembled and tested prior to installation at the pump station. Contractor shall provide for coordination between pump manufacturer and panel manufacturer to assure that the control panel as a whole, as well as the individual components, comprise a system which is intimately compatible with the pumps. The following equipment shall be included in the panel for duplex pump stations: Main breakers (2), pump circuit breakers (2), 20 amp panel circuit breaker, starters (2), alternator, elapsed time meter for each pump, run lights (2), HOA switches (2), pump disagree timer, phase voltage monitor relay, SCADA RTU with a radio telemetry unit, and an Auto-dialer. All switches, main circuit wiring, breakers and other devices shall be clearly and neatly labeled inside the control panel. Quantities will be required to be increased for stations with more than two pumps. See the Typical City Details attached as part of this Manual. A single line wiring diagram shall be included within the panel with a copy provided for the City's records.

30.14.03 Pump Alternator

An 8 pin plug-in solid state alternator (see approved Manufacturer's List attached as part of this Manual) shall be provided to change the pump starting sequence on each pumping cycle. A 3 position alternator test switch shall be provided to control the alternation operation. Switch positions to include the “Auto” to provide normal automatic sequence, “Off” position to disable alternator, and “Test” position with a spring return to allow the alternating of the pump sequence to check alternator operation.

30.14.04 Motor Starter and Selector Switches

The panel shall contain 2 motor starters. The motor starter shall be across the line magnetic starter with individual overload protection on each power leg with reset installed through the inner door unit. (See approved Manufacturer's List attached as part of this Manual.) Local Power Company Regulations shall govern.

Selector switches shall be installed on the face of the inner door unit. Selector switch shall be a heavy duty oil tight “Hand-Off-Auto” 3 position switch to control the operation mode of each pump motor starter.

30.14.05 Motor Circuit Protectors

Each pump motor shall be protected by a 3 pole motor circuit protector. (See approved Manufacturer's List attached as part of this Manual.) The Motor Circuit Protector shall be operated by a toggle-type handle and shall have a quick-make, quick-break, over center switching mechanism that is mechanically trip-free from the handle so that the contacts cannot be held closed against a short circuit and abnormal current, causing the Motor Circuit Protector to trip. Tripping shall be clearly indicated by the handle automatically assuming a position midway between the normal ON and OFF positions. All latch surfaces shall be ground and polished. All poles shall be so constructed that they open, close, and trip simultaneously. Motor Circuit Protector must be completely enclosed in a high-strength, glass polyester molded case. Ampere ratings shall be clearly visible. Contacts shall be of non-welding silver alloy. Arc extinction must be accomplished by means of arc chutes. A manual push-to-trip button shall be provided for manual exercising of the trip mechanism. Each pole of these Motor Circuit Protector's shall provide instantaneous short circuit protection by means of an adjustable magnetic-only element.

30.14.06 Power Supply and Main Disconnect

Power supply to the control panel shall be either 240 volt, 3 phase, 4 wire or 480 volt, 3 phase, 4 wire. Minimum service shall be 100 amp. Single phase power shall not be accepted.

Non-fusible safety service main disconnects shall be installed at all stations. In all 240 volt systems, disconnects shall be installed between the meter and the panel and on all 480 volt systems disconnect shall be installed ahead of the meter. LED power available indicators shall be supplied on all legs.

30.14.07 Circuit Breakers

A) General

The control-panel shall include main circuit breakers and generator breaker with mechanical interlock, a circuit breaker and magnetic starter for each pump motor, and 20 amp, 120 volt circuit breakers as required.

B) Main Breakers

The panel shall have an inter-lock system between the normal power main breaker and the emergency breaker to ensure only one breaker is in the "on" position at a time. Both breakers shall be equal in size. (See approved Manufacturer's List attached as part of this Manual.)

C) Circuit Breakers

All circuit breakers shall be heavy duty molded case breakers. The handle on the circuit breakers shall be operational through the inner door. (See approved Manufacturer's List attached as part of this Manual.)

D) Padlock Attachment

A Square D HPAFK (or approved equal) handler padlock attachment shall be installed on all motor circuit breakers.

30.14.08 Emergency Power Receptacle

This item shall only be required on stations that do not have a permanent standby generator system. The panel shall have an external mounted generator receptacle of the required size. (See approved Manufacturer's List attached as part of this Manual.)

30.14.09 Wiring

All power wires shall be THW or THWN 75°C insulated stranded copper conductors, and shall be appropriately sized for the given load application. All control circuit wire shall be type THW, size 14, stranded type. All wiring within the enclosure shall be neatly routed by the use of slotted type wiring duct with snap on type covers. Wiring on the rear of the inner door shall be neatly bundled with nylon ties and include sufficient loop across the hinges to prevent wire damage, with each end of conductor marked (I.D.). Colors shall be red for 24 volt, white for neutral, black for 120 volts.

30.14.10 Terminal Points

Terminal points of all terminal strips shall be permanently identified. All terminal numbers and identifying nomenclature shall correspond to and be shown on electrical diagrams. All wiring shall be permanently shown on electrical schematic diagrams.

30.14.11 Engraved Nameplates

All circuit breakers, control switches, indicator pilot lights, and other control devices shall be identified with permanently affixed legend plates and lamicoid-type engraved nameplates where applicable.

30.14.12 Surge Protector

A surge protector shall be included and wired to protect motors and control equipment from lightning induced line surges. All surge protectors shall be UL approved and installed per respective power company requirements and manufacturers' specifications, surge protectors shall be attached to the main disconnects.

30.14.13 Elapsed Time Meters

Elapsed time meters shall be 115 volt non-reset type and shall totalize pump running time in hours and tenths of hours to 99999.9 hours.

30.14.14 Convenience Receptacle

On the face of the inner door unit, there shall be installed a 20 amp, 120 volt, duplex convenience receptacle. It shall be provided with it's own single pole, 20 amp circuit breaker for protection. Ground fault interrupt type shall be required.

30.14.15 Control Terminal Blocks

Control terminal blocks shall be of the clamp screw type, rated for 600 volts. Amperage rating shall accommodate the control circuit amperage. An additional 10 space terminal strip shall be installed in the cabinet for future use, in addition to the required number of terminals for alarms or signals as specified in the Typical City Details attached as part of this Manual.

30.14.16 Control Power Transformers

There shall be a control power transformer with a minimum size of 500 volt (AC) to provide 120 volt (AC) power for: coils for starters, 20 amp duplex receptacle, indicator pilot lights, alarm horn, alarm light, pump alternator, elapsed time meters etc. The secondary side shall have one leg fused and the other grounded. This control power transformer is required only on 480 volt control panels.

The signal required by the float switches and relays shall be 24 volt (AC). This shall be provided by a 24 volt (AC) control power transformer properly sized with a fused secondary.

30.14.17 Control Relay

The level control relays shall operate from 24 volt (AC). They shall be enclosed, plug-in 8 pin type with octal-style screw terminal sockets.

30.14.18 Electrical Schematic

There shall be permanently affixed to the interior side of the exterior enclosure door an electrical schematic diagram and a copy supplied to City personnel at start-up. The schematic diagram shall include the rated amperage and voltage for all components.

30.14.19 Phase Monitor

For all 240 volt stations an eight pin plug-in type phase monitor shall be provided for protection of electrical components due to phase loss. Adequate dummy pin protection shall be provided to prevent accidental interchanging of the eight pin phase monitor with the eight pin alternator. All 480 volt stations shall have surface mount type phase monitors.

30.14.20 Battery Backup

A 12 volt (DC) battery shall be supplied on all lift stations to insure operation of the SCADA system in the case of a power outage. Refer to the Typical City Details attached as part of this Manual.

30.14.21 Operation

The control panel shall respond to a pressure transducer coupled with SCADA control system as well as redundant liquid level float switches to automatically start and stop pumps as well as sound an alarm upon high or low wet well levels.

The control panel shall operate 2 electrical submersible pumps at the power characteristics stipulated. The control function shall provide for the operation of the lead pump under normal design conditions. If the incoming flow exceeds the pumping capacity of the lead pump, the lag pump shall automatically start to handle this increased flow. As the flow decreases, pumps shall be cut off at elevation as shown on the plans. Pumps shall alternate positions as lead pump at the end of timing cycle. A failure of the alternator shall not disable the pumping system. The alternator shall include a safe, convenient method of manual alternation and also have provisions to prevent automatic alternation without disturbing any wiring. Should the “pump off” regulator fail, the system shall keep the station in operation and provide a visual indication of the regulator failure.

Normal operations shall be governed by the pressure transducer coupled with the SCADA control system. Upon abnormal wet well levels all pump control operations shall automatically revert to the redundant float type liquid level control system. These control components shall be mounted in one common enclosure. Control switches shall provide means to operate each pump manually or automatically. When operated in the automatic mode, the control assembly shall provide means to manually select or automatically alternate the position of the “lead” and “lag” pumps after each pumping cycle. A float type liquid level control system shall continuously monitor wet well liquid level and control

operation of the low-level cutoff for the pumps and shall operate off a 24 volt circuit. Alternate methods of liquid level measurement in the wet well may be considered on a case by case basis.

30.14.22 Housing

The duplex pump panel shall be housed in a NEMA 3R, Type 304, 14 Gauge stainless steel enclosure. Enclosure shall have provisions for padlocking the door and a dead front inner door unit for mounting controls. All exterior hardware and hinges shall be stainless steel. The outer door shall include a 3-point latch and stainless steel door handle as manufactured by Hoffman or approved equal.

There shall be, permanently affixed to the interior side of the exterior enclosure door, both a nameplate and a 10 inch x 12 inch pocket for log sheet storage. The nameplate shall contain the following information: voltage, phase, rated horsepower, speed, date manufactured and pump and control panel manufacturer's name, address and telephone number, pump data, including impeller data, operating point and head, KW input, and amperes at the operating point and at least 2 other points on the pump curve.

The control panel enclosure shall be Underwriters Laboratories (UL) 50 type 4X Listed.

30.14.23 Testing and Warranty

After fabrication in the control panel manufacturer's plant, an operational test shall be performed to check out the entire panel before delivery. Three phase source voltage to which the panel is intended for shall be used for the testing. The control panel manufacturer shall maintain a service organization in the State of Florida that is available for service. The manufacturer shall furnish a 5 year warranty against defects in materials and workmanship covering parts and labor on all items supplied under this Section.

Section 30.15 LIGHTS AND ALARMS

30.15.01 Indicator Lights

Heavy duty, oil tight, indicator lights as specified in the Typical City Details attached as part of this Manual shall be installed on the face of the inner door unit.

30.15.02 High Level Alarm

Two mercury float ball switches shall be provided as high and low level backup alarm switches to the telemetry system and to the red alarm signal light. A vapor proof red light and horn shall be mounted on top of the control panel enclosure for high level alarm. Also, there shall be an alarm silence push button on the inner door and a silence relay which will silence the horn and automatically reset when these signals are restored to normal. The push button shall be heavy duty oil tight. The red globe shall be the screw-on type.

Section 30.16 ELECTRICAL GROUNDING SYSTEM

30.16.01 General

A grounding system shall be installed as per National Electrical Code, Local Codes and Ordinances. The Drawings shall clearly show the Electrical Grounding System. An underground perimeter cable grounding system shall be installed with connections to at least the following equipment:

A) Wet well cover.

B) Valve vault cover.

C) Control panels.

D) Generator.

E) Utility company transformer.

F) Main disconnect switch.

G) Fence.

30.16.02 Material and Installation

The Drawings shall show details of material and installation to construct a completely functional and operational Electrical Grounding System.

Section 30.17 STANDBY POWER GENERATOR SYSTEM

30.17.01 General

A standby power generator system shall be installed at pump stations as required by this Manual for electrical power during the loss of normal power. Standby power generators shall be provided at all stations having the following characteristics:

A) 35 or greater total combined brake horsepower.

B) Peak design capacity of 1,000 gpm or more.

C) Arterial stations receiving flow from at least one other service area.

D) Service area includes critical users as determined on a case by case review.

E) Station with three or more pumps.

Generators shall be complete with all controls, automatic switchgear and shall produce 240 volts (AC), or 480 volts (AC), 3 phase, 4 wire power. Generator and controls shall be installed in an approved enclosure.

30.17.02 Generator Set General

The generator set shall consist of a diesel engine directly coupled to an electric generator, together with the necessary controls and accessories to provide continuous electric power to the lift station for the minimum duration of a 48 hour failure of the normal power supply.

A complete engine generator system shall be furnished and installed with fuel transfer pump, fuel day tank, battery, battery charger, muffler, radiator, control panel, remotely mounted automatic transfer switch (part of the control panel), and all other accessories required for an operational system. All materials and parts of the generator set shall be new and unused. Each component shall be of current manufacture from a firm regularly engaged in the production of such equipment. The set shall be of a standard model in regular production at the manufacturer's place of business. Units and components offered under the Specifications shall be covered by the manufacturer's standard warranty on new machines.

30.17.03 Requirements

The emergency generator set and accessories shall be of a type that complies with the latest edition of the National Electrical Code and all applicable state and local building codes.

The material and workmanship used in the manufacture of this equipment shall be of the highest quality consistent with the current standards for like equipment, and the equipment shall be manufactured in such a manner so as to conform to the latest applicable IEEE, ANSI, ISA, NEMA, and EEIA Standards.

The equipment supplier shall be liable for any latent defects due to faulty materials or workmanship in the equipment which may appear within 1 year from the date of equipment start-up.

30.17.04 Tests

Equipment shall be completely assembled and tested at the factory prior to shipment. Certified copies of the data obtained during these tests shall be submitted to the City.

Final tests, in the presence of the City's representative, shall be conducted at the site after installation has been completed. The emergency generator manufacturer shall furnish a service representative to operate the engine during the tests, to check all details of the installation and to instruct the City's representatives in proper equipment operation.

Field tests shall include operating the diesel generating set for 8 hours, carrying normal lift station loads. The Contractor shall refill the main fuel tank at the completion of the tests.

30.17.05 Ratings

The rating of the generator shall be as specified in the Typical City Details attached as part of this Manual. These ratings must be substantiated by the manufacturer's standard published curves. Special ratings shall not be acceptable. The set shall be capable of supplying the specified usable KW for the specified duration, including the power required for the pump start-up, without exceeding its safe operating temperature.

30.17.06 Engine

The engine shall be water cooled, four stroke cycle, compression ignition diesel, LP or natural gas. The engine shall be equipped with fuel, lube oil and intake air filters; lube oil coolers, fuel transfer pump, fuel priming pump, and gear-driven water pump, where applicable. The engine and generator shall be torsionally compatible to prevent damage to either engine or generator.

An engine instrument panel shall be installed on the generator set in an approved location. The panel shall include oil and fuel pressure and water temperature gauges. A mechanically driven engine hour meter shall also be provided.

The engine governor shall be of the isochronous electronic type. Frequency regulation shall not exceed ±0.25% under steady state conditions. The engine shall start and assume its rated load within 10 seconds, including transfer time.

30.17.07 Generator

The generator shall be a 3 phase, 60 hertz, single bearing, synchronous type, built to NEMA Standards. Epoxy impregnated Class F insulation shall be used on the stator and the rotor.

The excitation system shall employ a generator-mounted, volts-per-hertz type regulator. Voltage regulation shall be ±2% from no load to full load. Readily accessible voltage drop, voltage level and voltage gain controls shall be provided. Voltage level adjustment shall be a minimum of ±5%.

30.17.08 Engine Generator Control Panel

A generator mounted NEMA 3R type 304, vibration isolated, 14 gauge stainless steel control panel shall be provided. Panel shall contain, but not be limited to, the following equipment:

A) Control Equipment

Control equipment shall consist of all necessary exciter control equipment, generator voltage regulators, voltage adjusting rheostat, speed control equipment, and automatic starting controls, as required to satisfactorily control the engine/generator set. In addition, an automatic safety shut down shall be provided for low oil pressure and/or high temperature conditions in the engine. An emergency shut down lever switch shall be provided on the air intake.

B) Metering Equipment

Metering equipment shall include 3½ inch meters (dial or digital type frequency meter, 2% accuracy voltmeter, and ammeter and ammeter-voltmeter phase selector switch). The control panel shall also include the engine water temperature, lube oil pressure and hour meter.

C) Fault Indicators

Individual press-to-test fault indicator lights for low oil pressure, high water temperature, low water level, over speed, over crank, and for day tank high and low fuel level shall be provided.

D) Function Switch

A four position function switch marked “Auto”, “Manual”, “Off/Reset”, and “Stop” shall be provided.

30.17.09 Battery Charger

The battery charger shall be so designed that it shall not be damaged and shall not trip its circuit protective device during engine cranking or it shall be automatically disconnected from battery during cranking period. The charger shall be mounted in the emergency generator control panel. The charger shall have a 7 day/24 hour timer control.

30.17.10 Battery

The battery shall be lead-acid type with sufficient capacity to provide 90 seconds total cranking time without recharging. The battery shall be adequately rated for the specific generator set. The battery shall be encased in hard rubber or plastic and shall be furnished with proper cables and connectors, together with rack and standard maintenance accessories. The battery shall be provided with a 48 month warranty for replacement if found to be defective.

30.17.11 Base and Mounting

A suitable number of spring-type vibration isolators with a noise isolation pad shall be provided to support the set and its liquids.

30.17.12 Utility Connections

All connections to the generator set shall be flexible.

30.17.13 Cooling System

The generator set shall be equipped with an engine mounted radiator sized to maintain safe operation at 110°F maximum ambient at the pump station altitude. A blower type fan shall be used directing the air flow from the engine through the radiator. The entire cooling system shall be filled with 50% glycol-water solution.

30.17.14 Fuel System

An above ground, vaulted, main fuel oil storage tank with float switch, and fuel level indication, LP or natural gas tank shall be furnished and installed by the Contractor. The emergency system shall include low fuel level contacts for remote alarm. If necessary to guard against loss of prime to pump, a check valve shall be mounted on pump intake. The emergency system shall include a float switch, fuel level gauge and standard control panel.

Above ground vaulted fuel oil tanks shall be equipped with an overfill containment system supplied by the tank manufacturer.

Fuel oil piping, including mounting of any required fuel tanks, shall be furnished and installed by the Contractor and shall have double wall containment for all piping. The Contractor shall be required to permit the fuel system through the County and FDEP.

30.17.15 Exhaust System

The generator set supplier shall provide a critical-type silencer, with flexible exhaust fittings, properly sized and installed, according to the manufacturer's recommendation. The silencer shall be mounted so that its weight is not supported by the engine. The exhaust system shall not exceed residential noise limit requirements.

Exhaust pipe size shall be sufficient to ensure that measured exhaust back pressure does not exceed the maximum limitations specified by the generator set manufacturer. The exhaust system shall include a flexible, seamless, stainless steel connection between the engine exhaust outlet and the rest of the exhaust system. The exhaust system shall be a part of generator enclosure.

30.17.16 Weatherproof Enclosure

Enclosure and all other items shall be designed and built by engine manufacturer as an integral part of the entire generator set, and shall be designed to perform without overheating in the ambient temperature specified. Enclosure shall be constructed of 14 or 16 gauge sheet metal suitably reinforced to be vibration free in the operating mode. Four hinged doors shall be provided to allow complete access without their removal. Each door shall have at least 2 latch-bearing points. Side and rear panels shall be completely and simply removable for major service access. Roof shall be peaked to allow drainage of rain water. Baked enamel finish with primer and finish coat shall be painted before assembly. All fasteners shall be rust resistant. Unit shall have sufficient guards to prevent entrance by small animals. Padlocks shall be provided. Batteries shall be designed to fit inside enclosure and alongside the engine. Batteries under the generator are not acceptable. Unit shall have coolant and oil drains outside the unit to facilitate maintenance. Each drain line shall have a high quality valve located near the fluid source. Fuel filter shall be inside the base perimeter and located so spilled fuel cannot fall on hot parts of engine or generator. A cleanable primary fuel strainer shall be used to collect water and sediment between tank and main engine fuel filter. Crankcase fumes disposal shall terminate in front of the radiator to prevent oil from collecting on the radiator core and reducing cooling capacity.

30.17.17 Automatic Transfer Switch

The automatic transfer switch shall be part of the control panel. The transfer switch shall be provided with the following features:

A) Complete protection, close differential voltage sensing relays monitoring all 3 phases (pick-up set for 95% of nominal voltage, drop-out set for 85% nominal voltage).

B) Voltage sensing relay on emergency source (pick-up set for 95% of nominal frequency).

C) Time delay on engine starting--adjustable from 1 second to 300 seconds (factory set at 3 seconds).

D) Time delay normal to emergency transfer--adjustable from 0 second to 300 seconds (factory set at 1 second). The Contractor shall request time delay settings in accordance with the priority rating or their respective loads.

E) Time delay emergency to normal transfer--adjustable 30 seconds to 30 minutes (factory set at 5 minutes), and time delay bypass switch shall be provided on door of the switch cabinet.

F) Unload running time delay for emergency engine generator cooling down-adjustable from 0 to 5 minutes (factory set at 5 minutes) unless the engine generator control panel includes the cool down timer.

30.17.18 Warranty

Products shall be guaranteed to be free from defects in material and workmanship under normal use and service for a period of 1 year after start-up.

Section 30.18 FENCING

All pump station sites shall be fenced. However, exception to this requirement on a case by case basis and subject to sufficient landscape screening. The Contractor shall furnish and erect the chain link fence and gate in accordance with these Specifications and in conformity with the lines, grades, notes and typical sections as specified in ARTICLE 20 and the Typical City Details attached as part of this Manual.

Chain link fence shall be 6 feet high, in accordance with this Manual. One 12 foot double swing drive gate (two 6 foot leaves),hinged to swing through 180° from open to close to open, with center drop rod assembly latch (no post) and gate hold backs for both leaves shall be installed, complete with latches, locking device, stops keeper, hinges, fabric and braces. Gate shall open outward from station. Gates shall be the same height as the fence and the gate fabric shall be the same as the fence fabric. Gate leaves less than 8 feet wide shall have truss rods or intermediate braces and gate leaves 8 feet or more in width shall have intermediate braces and diagonal truss rods or shall have tubular members as necessary to provide rigid construction, free from sag or twist.

All posts shall be set 3 feet deep in concrete footings, 12 inches in diameter for line posts, gate and corner posts. After the post has been set, aligned and plumbed, the hole shall be filled with 3,000 psi concrete. The concrete shall be thoroughly worked into the hole so as to leave no voids. The exposed surface of the concrete shall be crowned to shed water.

Section 30.19 TOOLS AND SPARE PARTS

One set of all special tools required for normal operation and maintenance shall be provided. All such tools shall be furnished in a suitable steel tool chest complete with lock and duplicate keys.

The pump and control panel manufacturer(s) shall provide a suggested list of spare parts for the equipment being supplied for the pump station. The cost of the spare parts shall not be less than $5,000.00 based upon the manufacturers published suggested list price for the parts. The City will review the recommended list and will either approve or modify the list as they deem necessary. Any modifications made to the list will be made so that the cost remains within the above required limit. All spare parts are required to be provided to the City prior to final inspection and start-up of the station.

Section 30.20 PUMP STATION WATER SYSTEM

All wastewater pump stations shall be provided with a water system with adequate capacity and pressure for station wash down and other requirements. The station water system shall be completely separated from the potable water supply by means of a metered, reduced pressure type backflow preventer

Section 30.21 INSPECTION AND TESTING

A factory representative knowledgeable in pump operation and maintenance shall inspect and supervise a test run at the pumping station in the presence of the City Engineer or his Designee. The City shall be provided 24 hour notice before this inspection is to commence. A minimum of 1 working day shall be provided for the inspections. Additional time made necessary by faulty or incomplete work or equipment malfunctions shall be provided as necessary to meet the requirements in this Manual at no additional cost to the City. Upon satisfactory completion of the test run, the factory representative shall issue the required manufacturer's certificate.

The test run shall demonstrate that all items of this Manual have been met by the equipment as installed, and shall include, but not be limited to, the following tests:

A) That all units have been properly installed.

B) That the units operate without overheating or overloading any parts and without objectionable vibration.

C) That there are no mechanical defects in any of the parts.

D) That the pumps can deliver the specified pressure and quantity.

E) That the pumps are capable of pumping the specified material.

F) That the pump controls perform satisfactorily.

Section 30.22 LIFT STATION SERVICES

The necessary utility services (electrical power, telephone, water) shall be provided by the Owner/Developer and accounts for such services shall be transferred to the City of Ocoee prior to issuance of a Certificate of Completion for facilities that are to be dedicated to the City.

Section 30.23 REQUIRED SUBMITTALS

Submittals shall be provided to the City, for any lift stations to be taken over by the City, in triplicate and include the following:

A) As-Built Drawings providing a detail showing fencing, gates, all important details of construction, dimensions, anchor bolt locations, and the flow meter and valve pit relative to the lift station, including but not limited to all elevations, such as inverts, floor elevations and finished grades, etc. All the above improvements shall be included inside the fenced-in area. The approach road and driveway shall also be shown. The Drawing shall be fully dimensioned and in State Plane coordinates.

B) Descriptive literature, bulletins, and/or catalogs of the equipment, both hard copy as well as electronic "PDF" files.

C) Data on the characteristics and performance of each pump. Data shall include guaranteed performance curves, based on actual shop tests of similar units, which show that they meet the specified requirements for head, capacity, efficiency, NPSHR, submergence and horsepower. Curves shall be submitted on 8½" by 11" sheets, at as large a scale as is practical. Curves shall be plotted from no flow at shut off head to maximum manufacturer recommended pump capacity. Catalog sheets showing a family of curves will not be acceptable.

D) Complete layouts, wiring diagrams, telemetry or control schematics, including coordination with other electrical control devices operating in conjunction with the pump control system. Suitable outline drawings shall be furnished for approval before proceeding with manufacture of any equipment. Standard preprinted sheets or drawings simply marked to indicate applicability will not be acceptable.

E) A drawing showing the layout of the pump control panel shall be furnished. The layout shall indicate all devices mounted on the door and the panel shall be completely identified.

F) The weight of each pump.

G) Complete motor data shall be submitted including:

1) Nameplate identification.

2) No-load current.

3) Full load current.

4) Full load efficiency.

5) Locked rotor current.

6) High potential test data.

7) Bearing Inspection report.

Section 30.24 MINOR LIFT STATION

The City has developed a minor wastewater pump station for small service areas to promote the City's effort to extend centralized sewer and mitigate certain impacts to development for land owners. This application of this station is limited as stated below and is only applicable to stations that will be dedicated to the City. The City established the application of a minor lift station, by specifically specifying pump make, model, and size, wetwell type and size, and all the stations applicable appurtenances. The modification and/or substitution of any critical element of the minor station shall not be allowed.

The approved application of the Minor Lift station shall be subject to all of the following conditions:

1. Developments that cannot feasibly gravity flow to an existing City sewer collection manhole or pump station; and.

2. Developments provide an acceptable lift station site with collection and discharge routing access to either be by fee simple dedication(s) or granted easement(s); and

3. Developments connecting to a manhole or existing forcemain where pumping from the minor lift station discharge is not less than (4) feet per second at peak system pressures and ultimate service shall not require runtime of greater than 60% during peak hour; and

4. Station shall ultimately realize service to three (3) or more developments; and

5. Ultimate volume-metric service to the station shall be 10 or greater equivalent residential units (ERU) but no more than 40 ERUs.

ARTICLE 31

POTABLE WATER SYSTEMS

Index

31.01 GENERAL CONSIDERATIONS
31.02 DESIGN BASIS
31.03 DETAILS OF DESIGN AND CONSTRUCTION
31.04 WATER METERING
31.05 WATER SERVICES AND CONNECTIONS
31.06 SERVICE PIPE, STOPS, FITTINGS, AND SERVICE SADDLES
31.07 WATER MAIN MATERIALS
31.08 WATER MAIN INSTALLATION
31.09 VALVE INSTALLATION
31.10 IDENTIFICATION
31.11 SEPARATION OF WATER MAINS AND SEWERS
31.12 TRENCH PREPARATION AND PIPE BEDDING
31.13 HYDROSTATIC TESTS
31.14 DISINFECTION OF WATER MAINS
31.15 FIRE HYDRANTS
31.16 CROSS CONNECTION CONTROL

BACK TO TABLE OF CONTENTS

Section 31.01 GENERAL CONSIDERATIONS

31.01.01 Type of Water Mains

The City will approve plans for potable water supply mains and extensions (herein this ARTICLE as water main) only when such mains are designed and constructed in accordance with the criteria set forth in this Manual.

31.01.02 Design Period

Water mains shall be shall be designed for the estimated ultimate tributary population, as derived for the City's approved future land uses and/or historical flows. Potable water main shall also consider flows for fire protection demand. In the event the approved City of Ocoee Water Master Plan or Study, latest edition, identifies components of the watermain under consideration, the largest capacity consideration shall be required.

31.01.03 Location

Water mains shall be located in dedicated rights-of-way or utility easements. When installed in rights-of-way, water mains shall, in general, maintain a consistent alignment with respect to the centerline of the road. All water mains located outside of dedicated rights-of-way shall require a minimum 20 foot easement. Additional easement widths shall be provided when the pipe size or depth of cover so dictate. If a water main is located adjacent to a road right-of-way, a minimum 10 foot easement shall be provided. Additional easement widths shall be provided if the pipe size or depth of cover so dictate. Water mains shall not be placed under retention ponds, tennis courts, or other structures. In general, water mains shall not be located along side or rear lot lines. Placement of a water main along side or rear lot line may be allowed on a case by case basis if such a water main configuration results in efficient placement and utilization of the water main network. The criteria shall also apply to water mains in retention pond berms.

Section 31.02 DESIGN BASIS

31.02.01 Average Daily Flow and Peak Flow

Average daily water flow shall be calculated by referencing the Equivalent Residential Unit (ERU) flow rates as outlined below. Peak flow, at a minimum, shall be the average daily flow times a peaking factor of 4. The average daily flow for domestic use shall be calculated at the minimum rate of 100 gallons per day per capita, with 3.5 persons per single family residence, and 2.5 persons per multi-family or mobile home dwelling unit. Maximum hour demand to be used for design shall be 1.0 gallons per minute (gpm) per single family residence and 0.7 gpm per dwelling unit for each multi-family or mobile home unit. Flow demands for commercial, industrial or other special developments shall be established from the estimates provided in current City Ordinance. At the discretion of the City Engineer, existing records of like facilities or estimated projections, using the best available data, may be considered.

31.02.02 Fire Flow Requirements

Fire flow requirements shall be determined in accordance with applicable City Codes. As a minimum, the requirements outlined in the ISO. "Guide to Determining Needed Fire Flow", latest edition, shall be met. In no case shall needed fire flow be less than 750 gpm. Maximum daily flow with fire flow shall not exceed 10 fps. Maximum daily flow, at a minimum, shall be the average daily flow times a factor of 2.

31.02.03 Design Calculations

Owner's/Developer's Engineer shall submit signed, sealed and dated design calculations with the Plans for all water distribution projects. Calculations shall show that the water mains will have sufficient hydraulic capacity to transport:

A) Peak hourly flows.

B) A combination of maximum daily flows and fire flows.

All calculations shall meet the requirements of Section 29.03.0l. Head losses through meters and backflow devices shall also be included in calculations. The Owner's/Developer's Engineer, at the request of the City, shall perform a nodal analysis of the proposed project along with its effects upon the City's entire system. The City's nodal model shall be obtained and used for this purpose.

31.02.04 Potable Water System Hydraulic Modeling

The City of Ocoee maintains a potable water hydraulic model (Bentley WaterCAD) which is used for but not limited to determining system performances and offsite impacts. For developments that may substantially add to or impact the City's potable water distribution system, the Owner/Developer shall cause the incorporation of the development elements into the City's model and the simulation/analysis of the model. Unacceptable operating conditions and/or offsite impacts created by the proposed development shall be remediated by the Owner/Developer.

This effort to be undertaken by Owner/Developer can be done by either the developer's engineer performing the model work with a City review, or by electing to have the City undertake the work. The election for the City to perform the work shall require City approval. All costs incurred by the incorporation and outside reviews by the City shall be at the Owner/Developer's expense. All final products shall become the property of the City.

The Owner/Developer may request the City to develop the project's nodal model, with input from the Owner's/Developer's Engineer, but this will be performed at the availability of City Staff and at a rate to cover City's cost.

Section 31.03 DETAILS OF DESIGN AND CONSTRUCTION

31.03.01 Pressure

All water mains shall be designed in accordance with Section 29.02.03 above. The system shall be designed to maintain a minimum pressure of 20 psi at all points in the distribution system under all conditions of flow. Higher pressures may be required at commercial, industrial and high density residential areas. The normal working pressure in the distribution system should be approximately 55 psi, but in no case less than 35 psi on the downstream side of a meter. For pressures greater than 90 psi special provisions may be required. Design Friction Losses for water mains shall be determined using the Hazen-Williams friction coefficient of C=100. Peak hourly flow shall not exceed 5 fps. Maximum daily flow with fire flow shall not exceed 10 fps.

31.03.02 Diameter

Only 4", 6", 8", 12", 16", 20", 24", 30", 36", 42", 48" and 54" diameter water mains shall be permitted. Four inch water mains shall be permitted only in cul-de-sac areas with a maximum length of 500 feet of pipe. In cul-de-sac areas only, 4 inch looped connections are required to prevent dead ends. As a minimum, 6 inch looped systems shall be required in low density residential projects. Where looping of mains is not practical, minimum 8 inch mains shall be required, unless detailed calculations are submitted to substantiate the sufficiency of a 6 inch main. In commercial, industrial, and high density residential areas, minimum 8 inch looped mains shall be required. Larger size mains shall be required if necessary to allow the withdrawal of the required fire flow while maintaining the minimum residual pressure specified in Section 29.03.01.

31.03.03 Dead Ends

In order to provide increased reliability of service and reduce head loss, dead ends shall be minimized by making appropriate tie-ins wherever practical, as determined by the City. System looping is required wherever possible to increase overall capacity, service and to maintain quality. Where dead-ends occur, they shall be provided with a fire hydrant or blow-off for flushing purposes. Blow offs shall be sized to provide flows which will give a velocity of at least 2.5 feet per second in the water main being flushed. Where routine and continuous flushing is predicted or determined based on water quality issues, an automatic flushing appurtenance shall be required.

No flushing device shall be directly connected to any sewer.

31.03.04 Valves

Valves shall be provided for all branch connections, loop ends, fire hydrant stubs, or other locations as required to provide an operable, easily maintained, and repaired water distribution system. Valves are to be placed so that the maximum allowable length of water main required to be shutdown for repair work shall be 500 feet in commercial, industrial or multi-family residential areas, or 800 feet in other areas.

31.03.05 Air Relief Valves

At high points in water mains where air can accumulate, provisions shall be made to remove the air by means of hydrants or automatic air relief valves. Automatic air relief valves shall not be used in situations where flooding of the manhole or chamber may occur. Refer to the Typical City Details attached as part of this Manual.

31.03.06 Fire Hydrants

Fire Hydrants shall be considered and designed in accordance with this ARTICLE.

31.03.07 Chamber Drainage

Chambers, pits or manholes containing valves, blow-offs, meters, or other such appurtenances to a distribution system shall not be connected directly to any storm drain or sanitary sewer, nor shall blow-offs or air relief valves be connected directly to any sewer.

31.03.08 Disinfection Following Repair or Replacement

Any part of the City water system which has direct contact with finished water and has been out of service for repair, alteration, or replacement shall be disinfected as outlined in this Manual or AWWA C-651.

Section 31.04 WATER METERING

31.04.01 General

All water service connections shall be metered. In general, the method of metering shall follow the guidelines listed below. However, the Owner's/Developer's Engineer must obtain approval before finalizing the design of the metering system. Master metering for irrigation for common grounds shall be reviewed and approved by the City Engineer on a case-by-case basis.

31.04.02 Single Family, Duplex, and Multi-Family Subdivisions

Each unit shall be individually metered. However, a variance may be requested for multi-family subdivisions. Single and Double services shall be installed at property lines as specified in the Typical City Details attached as part of this Manual.

31.04.03 Commercial, Industrial, and Institutional Projects

In general, each building shall be individually metered. Meter(s) shall be located in the public rights-of-way at the property line.

31.04.04 Shopping Centers

Each unit shall be individually metered. The meters shall be located either in the right-of-way or within a Utility Easement. The meters shall be located within an unpaved area to facilitate removal, repair and/or replacement without damage to paved surfaces.

31.04.05 Meter Installation

All meter boxes shall be installed by the Contractor at finished grade and level. All meters 2 inches and smaller will be installed by the City after payment of applicable fees and charges. All meters 2 inches in size and smaller shall be installed underground in an approved meter box. Meters larger than 2 inches shall be installed above ground. In general, meters larger than 2 inches shall be located in a meter easement located adjacent to the public right-of-way.

31.04.06 Meter Sizing

Size of all meters shall be determined by the Owner's/Developer's Engineer and approved by the City Utilities Division. The Owner's/Developer's Engineer shall provide sufficient information on estimated peak flows and low flows so that meter size can be evaluated. The Owner's/Developer's Engineer shall include head-losses through metering device when designing the water system.

Section 31.05 WATER SERVICES AND CONNECTIONS

Water services and connections shall conform to the applicable provisions of this Manual and the Typical City Details attached as part of this Manual. Only 1", 1 ½", 2", 3", 4", 6", 8", 10" and 12" services shall be permitted. Where water services greater than 12 inches are required dual services shall be provided. New services and connections to the water system, either new or existing, shall be made by the Contractor.

Water service piping and connection shall be installed as specified in the Typical City Details attached as part of this Manual. The location of all service lines shall be as specified in the Typical City Details attached as part of this Manual and shall be either single or dual service. On curbed streets, the exact location for each installed service shall be marked by etching or cutting a "W" in the concrete curb. Where no curb exists, locations shall be adequately marked by a method approved by the City.

Section 31.06 SERVICE PIPE, STOPS, FITTINGS, AND SERVICE SADDLES

31.06.01 Service Pipe

All service lines shall be 1", 1 ½" or 2" polyethylene tubing conforming to specifications in AWWA C-800 and AWWA C-901.

31.06.02 Stops

Corporation stops shall be 1", 1 ½" or 2" brass, equipped with connections compatible with the polyethylene tubing and threaded in accordance with specifications in AWWA C-800 and AWWA C-901. Curb stops shall be sized to match the meter size and conform to the specifications in AWWA C-800 and AWWA C-901.

31.06.03 Fittings

Fittings shall be brass, cast and machined in accordance with specifications in AWWA C-800 and AWWA C-901, with compatible polyethylene tubing connections.

31.06.04 Service Saddles

A service saddle may be used for all service line taps. Service saddles shall be double strap, anchored by a minimum 4 bolt pattern on a ductile iron saddle body. The City may require a stainless steel strap and fusion epoxy or nylon coated ductile iron body with stainless steel hardware in areas designated as corrosive.

Section 31.07 WATER MAIN MATERIALS

31.07.01 General

These Specifications cover the pipe, fittings, and accessory items used for water distribution systems.

Pipe used in water distribution systems shall be ductile iron pipe (DIP).

The Contractor shall be responsible for all materials furnished and storage of same, until the date of substantial completion. The Contractor shall replace, at the Contractor's expense, all materials found to be defective or damaged in handling or storage. The Contractor shall, if requested by the City, furnish certificates, affidavits of compliance, test reports, or samples for check analysis for any of the materials specified herein. All pipe delivered to project site for installation is subject to random testing for compliance with the designated specifications.

31.07.02 Ductile Iron Pipe

All ductile iron pipe of nominal diameter 4 through 54 inches shall conform to ANSI/AWWA A-21.51/C-151. A minimum of Pressure Class 350 pipe shall be supplied for all sizes of pipe unless specifically called out in the detail sheets, or required by the City.

31.07.03 Fittings

Any fittings required shall be mechanical joint ductile iron or gray iron conforming to ANSI/AWWA A-21.10/C-ll0, 250 psi minimum pressure rating, or ductile iron compact fittings 4 through 12 inches in accordance with ANSI/AWWA A-21.53/C-153.

31.07.04 Joints

Joints for ductile iron pipe and fitting joints shall be push-on or mechanical joints conforming to ANSI/AWWA A-21.11/C-111. Where called for in the plans, restrained or flanged joints shall be provided. Flanged joints shall conform to ANSI Standard B-16.1-125 lb. Restrained joints shall conform to ARTICLE 26 of this Manual.

31.07.05 Coatings and Linings

Where ductile iron pipe and fittings are to be below ground or installed in a casing pipe the exterior coating shall be a minimum 1.0 mil thick in accordance with ANSI/AWWA A-21.51/C-151. Where ductile iron pipe and fittings are to be installed above ground, pipe, fittings and valves shall be thoroughly cleaned and given one field coat (minimum 1.5 mils dry thickness) of rust inhibitor primer. Intermediate and finished field coats of Alkyd shall also be applied by the Contractor (minimum 1.5 mils dry thickness each coat). Primer and field coats shall be compatible and shall be applied in accordance with the manufacturer's recommendations. (See approved Manufacturer's List attached as part of this Manual.) Final field coat shall be dark blue for raw water and blue for finished water.

All ductile iron pipe and fittings shall have an interior protective lining of cement-mortar with an NSF approved seal coat material in accordance with ANSI/AWWA A-21.4/C-104.

31.07.06 Polyethylene Encasement

The pipe shall be polyethylene encased (8 mil) where shown on the detail sheets or required by the City in accordance with ANSI/AWWA A-21.51/C-105.

31.07.07 Resilient Seat Gate Valves

All gate valves 12 inches and smaller shall be resilient seat gate valves. Such valves shall be resilient seated, manufactured to meet or exceed the requirements of AWWA C-515, latest revision, and in accordance with the following Specifications. Valves shall have an unobstructed waterway equal to or greater than the full nominal diameter of the Connecting Pipe. (See approved Manufacturer's List attached as part of this Manual.)

The valve body, bonnet, and bonnet cover shall be ductile iron. All ferrous surface inside and outside shall have a fusion-bonded epoxy coating. A 2 inch wrench nut shall be provided for operating the valve. All valves are to be tested in strict accordance with AWWA C-515. The valve shall be operated opening counterclockwise.

The valves shall be non-rising stem with the stem made of cast, forged, or rolled bronze as specified in AWWA C-515. Two stem seals shall be provided and shall be of the O-ring type. The stem nut must be independent of the gate.

The resilient sealing mechanism shall provide zero leakage at the water working pressure when installed with the line flow in either direction.

All shut-off valves 16” and larger shall be resilient seat gate with horizontal mechanical gearing and clear passage for pigging devices. Valve shall be as listed in the Approved Manufacturer’s List.

31.07.08 Butterfly Valves

Butterfly valves are **not** allowed.

31.07.09 Valve Boxes

All buried valves shall have cast-iron three piece valve boxes. Valve boxes shall be provided with suitable heavy bonnets and shall extend to such elevation at, or slightly above, the finished grade surface as directed by the City. The barrel shall be 2 piece, sliding type, having 5¼ inch shaft. The upper section shall have a flange at the bottom having sufficient bearing area to prevent settling and shall be complete with cast iron covers. Covers shall have “WATER” cast into the top for all water mains. The actuating nuts for deeper valves shall be extended to come up to 4 foot depth below finished grade.

Care shall be taken while constructing valve boxes to ensure that valve stems are vertical and the cast iron box has been placed over the stem with base bearing on compacted fill and top flush with final grade. Boxes shall have sufficient bracing to maintain alignment during backfilling. Contractor shall remove any sand or undesirable fill from valve box prior to final inspection.

31.07.10 Air Release Valves

The air release valves for use in water mains shall be installed as specified in the Typical City Details attached as part of this Manual and the make and model per the approved Manufacturer's List. Valves shall be provided with a vacuum check to prevent air from reentering the line. The fittings shall be threaded.

Section 31.08 WATER MAIN INSTALLATION

31.08.01 General

Pipe shall be installed in accordance with the manufacturer's specifications and instructions for the type of pipe used and applicable AWWA Standards, such as C-600 and C-603, unless otherwise stated in these Specifications. A 2" jumper connection shall be provided for purposes of filling and testing the installed water line prior to clearance for use. The jumper is to be installed per the Typical City Details attached as part of this Manual.

31.08.02 Pipe Handling

All types of pipe shall be handled in such manner as will prevent damage to the pipe or coating. Accidental damage to pipe or coating shall be repaired to the satisfaction of the City or be removed from the job. When not being handled, the pipe shall be supported on timber cradles or on properly prepared ground, graded to eliminate all rock points and to provide uniform support along the full length. When being transported, the pipe shall be supported at all times in a manner which will not permit distortion or damage to the lining or coating. Any unit of pipe that, in the opinion of the City, is damaged beyond repair by the Contractor shall be removed from the site of the work and replaced with another unit. Joint gaskets shall be stored in clean, dark, dry location until immediately before use.

Dirt or other foreign material shall be prevented from entering the pipe or pipe joint during handling or laying operations, and any pipe or fitting that has been installed with dirt or foreign material in it shall be removed, cleaned and relaid. At times when pipe laying is not in progress, the open ends of the pipe shall be closed by a water-tight plug or by other means approved by the City to ensure absolute cleanliness inside the pipe.

Section 31.09 VALVE INSTALLATION

All valves shall be inspected upon delivery in the field to insure proper working order before installation. They shall be set and jointed to the pipe in the manner as set forth in the AWWA Standards for the type of connection ends furnished. All valves and appurtenances shall be installed true to alignment and rigidly supported. Any damage to the above items shall be repaired to the satisfaction of the City before they are installed. Valves shall be installed in a vertical position and be provided with a standard valve box so arranged that no shock will be transmitted to the valve. The box shall be vertically centered over the operating nut, and the cast iron box cover shall be set flush with the road bed or finished surface. After installation, all valves shall be subjected to the field test for piping as outlined in these Specifications. Should any defects in materials or workmanship appear during these tests, the Contractor shall correct such defects to the satisfaction of the City.

Flanged joints shall be made with hot dipped galvanized bolts, nuts and washers. Mechanical joints shall be made with mild corrosion resistant alloy steel bolts and nuts. All exposed bolts shall be painted the same color as the pipe.

Section 31.10 IDENTIFICATION

In order to preclude possible domestic water tapping, all installed underground DIP or HDPE water mains shall be marked in accordance with 62.555.320 (21) (b) 3. Florida Administrative Code. Said stripe shall be a minimum 2 inches in width and shall be light blue in color. Backfill shall not be placed for 30 minutes if field painting is required. In addition, all pipe shall be buried with non-metallic warning/identification tape above the top of the pipe, see the Typical City Details. The tape shall indicate the presence of the water main plainly on the tape face. All PVC pipe shall be buried with a locating wire properly affixed to the main.

Section 31.11 SEPARATION OF WATER MAINS AND SEWERS

31.11.01 General

No water pipe shall pass through or come in contact with any part of a sanitary or storm sewer manhole.

Extreme caution shall be exercised when locating water mains at or near certain sites such as sewage treatment plants or industrial complexes. Individual septic tanks must be located and avoided.

Water mains that are laid in the vicinity of pipe lines designated to carry raw wastewater or reclaimed water (wastewater effluent) shall meet the horizontal and vertical separations specified below. Compliance with all separation requirements of F.A.C. Rule 62-555.314 shall be met as a minimum.

31.11.02 Horizontal Separation

Under normal conditions, water mains shall be located at least 10 feet horizontally from pipes carrying raw wastewater, and 3 feet horizontally from pipes carrying stormwater or reclaimed water. The distance shall be measured from inside edge of pipe to inside edge of pipe.

31.11.03 Vertical Separation

Under normal conditions, water mains shall be laid to provide a separation of at least 18 inches between the bottom of the water main and the top of the wastewater or storm sewer. Under unusual conditions, when construction conditions prevent a vertical separation of 18 inches, a lesser separation in accordance with 62.555.314 may be allowed.

31.11.04 Crossing of Water Mains and Sewers

Water mains shall be above the sewer whenever they cross. A vertical separation shall be maintained as described above. Adequate structural support for both the water main and sewers shall be provided to prevent excessive deflection of joints and settling.

Section 31.12 TRENCH PREPARATION AND PIPE BEDDING

31.12.01 Trench Preparation and Pipe Bedding

Applicable provisions of ARTICLE 6 of this Manual shall apply. Also refer to the Typical City Details attached as part of this Manual.

31.12.02 Pipe Preparation, Handling and Laying

All pipe and fittings shall be inspected prior to lowering into trench to insure no cracked, broken, or otherwise defective materials are being used. Contractor shall clean ends of pipe thoroughly and remove foreign matter and dirt from inside of pipe and keep clean during and after laying.

Contractor shall use proper procedures tools, and facilities for the safe and proper protection of the work. Contractor shall lower pipe into the trench in such a manner as to avoid any physical damage to the pipe and shall remove all damaged pipe from the job site. Care shall be taken to not drop or dump pipe into trenches under any circumstances.

Contractor shall prevent foreign material from entering the pipe while it is being placed in the trench. Contractor shall remove all foreign material from the pipe or joint ring before the next pipe is placed. If the pipe laying crew cannot put the pipe into the trench and in place without getting earth into the pipe, the City may require that snugly-fitted, tightly-woven canvas bags be placed over each end before lowering the pipe. The bags shall be left in place until the connection is to be made to the adjacent pipe. During laying operations, Contractor shall keep debris, tools, clothing, or other materials out of the pipe.

All ductile iron pipe shall be installed in accordance with AWWA C-600 unless such Standards conflicts with this Manual, in which case this Manual shall apply. Contractor shall cut pipe only as necessary to comply with alignment shown on the plans. Flame cutting of pipe shall not be allowed. Contractor shall provide special tools and devices, such as special jacks, chokers, and similar items required for proper installation. Lubricant for the pipe gaskets shall be furnished by the pipe manufacturer, and no substitutes shall be permitted under any circumstances.

The pipe shall be polyethylene encased (8 mil) where shown on the detail sheets in accordance with ANSI/AWWA A-21.51/C-105.

31.12.03 Trench Dewatering and Drainage Control

Contractor shall prevent water from entering the trench during excavation and pipe laying operations to the extent required to properly grade the bottom of the trench and allow for proper compaction of the backfill. Pipe shall not be laid in water.

31.12.04 Survey Line and Grade

Pipe shall be laid to the lines and grades shown on the plans. The Contractor shall provide line and grade stakes at a 100 foot maximum spacing and at all line and/or grade change locations. Contractor shall provide Temporary Bench Marks at maximum 1,000 foot intervals. The minimum pipe depth shall be 3 feet below the finished grade surface or 3 feet below the elevation of the edge of pavement of the road surface, whichever is greater.

31.12.05 Laying of Pipes on Curves

Pipe installed on long radius curves, either horizontal or vertical, may be installed with standard pipe by deflections at the joints. Maximum deflections at pipe joints, fitting and laying radius for the various pipe lengths shall not exceed 75 percent of the pipe manufacturer's recommendation.

The maximum allowable tolerance in the joint due to variances in installation is 0.75 degrees (3-inches per joint per 20 ft stick of pipe). No bending tolerance in the pipe barrel shall be accepted. Alignment change shall be made only with sleeves and fittings.

31.12.06 Pipe Restraining and Thrust Block

Requirements specified in ARTICLE 26 of this Manual shall apply.

31.12.07 Bedding and Backfill for Pipes

Requirements specified in ARTICLE 6 of this Manual shall apply.

Section 31.13 HYDROSTATIC TESTS

31.13.01 General

Hydrostatic tests shall consist of pressure test and leakage test. Hydrostatic tests shall be conducted on all newly laid pressure pipes, joints and valves including all service lines to the curb stops. Air testing of pressure pipes shall not be permitted under any circumstance. Tests shall not be made on sections exceeding 2,000 feet. Contractor shall furnish all necessary equipment and material, make all taps, and furnish all closure pieces in the pipe as required. Equipment to be furnished by the Contractor shall include graduated containers, pressure gauges, hydraulic force pumps, and suitable hoses and piping. The City will monitor and approve a satisfactory test.

The Contractor may conduct hydrostatic tests after the trench has been partially backfilled with the joints left exposed for inspection for informational purposes only. The hydrostatic tests for acceptance shall only be conducted after the trenches have been completely backfilled and compacted as specified. Where any section of pipe is provided with concrete thrust blocking, pressure test shall not be made until at least 5 days have elapsed after the thrust blocking is installed. If high-early cement is used for the concrete thrust blocking, the time may be reduced to 24 hours if the City concurs that the concrete has cured and reached adequate strength.

31.13.02 Testing Criteria

All pipe sections to be pressure tested shall be subjected to a hydrostatic pressure of 150 psi. The duration of each pressure test shall be for a period of 2 hours. If during the test, the integrity of the tested line is in question, the City may require a 6 hour pressure test. The basic provisions of AWWA C-600 shall be applicable.

31.13.03 Procedure for Pressure Test

Each section of pipe to be tested, as determined by the City, shall be slowly filled with water and the specified test pressure shall be applied by means of a pump connected to the pipe in a satisfactory manner. Before applying the specified test pressure, all air shall be expelled from the pipe. To accomplish this, taps shall be made and appropriate valves installed to ensure bleeding of all air from the main. If defective pipes, fittings, valves, or hydrants are discovered in consequence of this pressure test, all such items shall be removed and replaced by the Contractor with sound material and the test shall be repeated until satisfactory results are obtained. Provisions of AWWA C-600, where applicable, shall apply.

31.13.04 Procedure for Leakage Test

After completion of the pressure test, a leakage test shall be conducted to determine the quantity of water lost by leakage under the specified test pressure. Applicable provisions of AWWA C-600 shall apply.

Allowable leakage in gallons per hour for pipeline shall not be greater than that determined by the formula:

$$L = \frac{SD\,(p)^{1/2}}{133{,}200}$$

Note: L = Allowable leakage in gallons per hour.
S = Length of pipe tested, in feet.
D = Nominal diameter of the pipe in inches.
P = Average test pressure during leakage test in pounds per square inch gauge.

Leakage is defined as the quantity of water to be supplied in the newly laid pipe or any valved section under test, which is necessary to maintain the specified leakage test pressure after the pipe has been filled with water and the air expelled. Should any test of pipe laid disclose leakage greater than that allowed, Contractor shall locate and replace or repair the defective joints, pipe or valve until the leakage from subsequent testing is within the specified allowance.

Section 31.14 DISINFECTION OF WATER MAINS

31.14.01 General

Before being placed in service, all new water mains shall be chlorinated in accordance with the Specifications below and the procedures outlined in AWWA C-651 “Standard Procedure for Disinfecting Water Mains”.

31.14.02 Flushing

Sections of pipe to be disinfected shall first be flushed to remove any solids or contaminated material that may have become lodged in the pipe. If no hydrant is installed at the end of the main, then a blow-off valve shall be provided large enough to develop a velocity of at least 2.5 feet per second in the main.

All taps required for chlorination or flushing purpose, or for temporary or permanent release of air shall be provided for by the Contractor as a part of the construction of water mains. After the disinfection, all such taps shall be sealed to the satisfaction of the City.

31.14.03 Disinfection Criteria

Before being placed into service, all new mains and repaired portions of, or extensions to existing mains shall be chlorinated so that the initial chlorine residual is not less than 50 mg/l and that a chlorine residual of not less than 25 mg/l remains in the water after standing 24 hours in the pipe.

31.14.04 Form of Applied Chlorine

Chlorine may be applied as a liquid chlorine (gas-water mixture), or a mixture of water and high-test calcium hypochlorite. Contractor shall assume responsibility for safe handling of chlorine and shall meet requirements of OSHA and other regulatory agencies for safe handling of chlorine.

31.14.05 Point of Application

The preferred point of application of the chlorinating agent is at the beginning of the pipe line extension or any valved section of it, and through a corporation stop inserted in the pipe. The water injector for delivering the chlorine-bearing water into the pipe shall be supplied from a tap made on the pressure side of the gate valve controlling the flow into the pipe line extension. Alternate points of applications may be used when approved or directed by the City.

31.14.06 Chlorinating Valves and Hydrants

In the process of chlorinating newly laid pipe, all valves or other appurtenances shall be chlorinated while the pipe line is filled with the chlorinating agent and under normal operating pressure.

31.14.07 Operation of City Valves

Valves shall be manipulated by the City personnel so that the strong chlorine solution in the line being treated shall not flow back into the line supplying the water.

31.14.08 Retention Period

Treated water shall be retained in the pipe at least 24 hours. After this period, the chlorine residual at pipe extremities and at other representative points shall be at least 25 mg/l.

31.14.09 Final Flushing and Testing

Following chlorination, all treated water shall be thoroughly flushed from the newly laid pipe at its extremity until the replacement water throughout its lengths shows upon test, a free chlorine residual not in excess of that normally carried in the system. Flushed chlorinated water shall be de-chlorinated by an approved method before or during discharge.

After flushing, water samples collected on 2 successive days from the treated piping system, as directed by the FDEP permit, shall show acceptable bacteriological results. All bacteriological testing shall be performed by a certified laboratory or City and paid for by the Contractor. All such bacteriological analysis must be performed by a laboratory certified by the State of Florida.

Proper chain of custody procedures must be followed and samples shall only be collected by certified laboratory personnel in the presence of City personnel.

Copies of testing results and all related correspondence with the FDEP shall be submitted to the City.

31.14.10 Repetition of Flushing and Testing

Should the initial treatment result in an unsatisfactory bacterial test, the original chlorination procedure shall be repeated by the Contractor until satisfactory results are obtained.

Section 31.15 FIRE HYDRANTS

31.15.01 Material

Fire hydrants shall have a minimum 5¼ inch valve opening and shall comply with AWWA Standard C-502 for fire hydrants for water works service, unless in conflict with Manual, in which case this Manual shall apply. Each hydrant shall have 6 inch mechanical joint ends with harnessing lugs ("dog ears") and shall open by turning to the left (counter-clockwise). Fire hydrant shall be of ample length for a minimum 3½ foot depth of bury. It shall be provided with two 2½ inch hose nozzles and one 4½ inch pumper nozzle, all having National Standard hose threads. Nozzles shall have caps attached by chains. Operating nuts shall be AWWA Standard (pentagonal, measuring 1½ inch point to flat). Fire hydrants shall be equipped with O-Ring packing. (See approved Manufacturer's List attached as part of this Manual.)

31.15.02 Painting

All iron parts of the hydrant, both inside and outside, shall be painted in accordance with AWWA C-502. All inside surfaces and outside surfaces below the ground line shall be coated with asphalt varnish. They shall be covered with 2 coats, the first having dried thoroughly before the second is applied. The outside of the hydrant above the furnished ground line shall be thoroughly cleaned and thereafter painted with 1 coat of paint of a durable composition, Hydrant Green for bonnet and Hydrant Yellow for body. Products shall be as identified in the Approved Manufacturer List.

31.15.03 Construction Details

Hydrants shall be plumb and shall be set so that the lowest hose connection is, at least, 18 inches above the surrounding finished grade. All hydrants shall be inspected in the field upon delivery to the job to insure proper operation before installation. The resetting, moving, and reconnecting of existing hydrants shall be handled in a manner similar to a new installation. Hydrant shall be constructed as specified in the Typical City Details attached as part of this Manual. Fire hydrants shall be required to have approved restraint glands.

31.15.04 Location and Spacing

Fire hydrants shall be as specified in the Typical City Details attached as part of this Manual. The Fire Chief or his Designee shall review the actual placement locations and final field locations of all hydrants. Hydrants shall be located no less than 5 and no more than 10 feet from the edge of pavement of the adjacent roadway and no less than 5 feet away from any physical feature which may obstruct access or view of any hydrant unless otherwise approved by the City. Hydrants shall not be placed on private distribution systems unless specifically approved in writing by the City of Ocoee Fire Rescue Department. Hydrants shall be within a right-of-way or an easement.

Hydrants shall be spaced and installed according to the following schedule in all buildings falling under the LDC regulations, unless specifically permitted by City to do otherwise

A) Single-Family Residential sprinklered and non- sprinklered:

1) 500 feet between hydrants.

2) No building further than 250 feet from a hydrant.

B) All other non-sprinklered and sprinklered (commercial, multifamily or industrial areas)

1) 350 feet between hydrants.

2) No building further than 200 feet from a hydrant.

C) These areas may require additional hydrants due to required fire flows.

Section 31.16 CROSS CONNECTION CONTROL

In order to protect the public water supply system from contamination due to cross connections, the Developer shall install City approved backflow prevention devices where there is the potential of a non potable substance or contamination coming into contact with the public water system. All backflow prevention devices shall comply with the City of Ocoee's Manual of Cross Connection Control and the Foundation for Cross Connection Control and Hydraulic Research, University of Southern California (FCCCHR).

ARTICLE 32

RECLAIMED WATER SYSTEM

Index

32.01 GENERAL CONSIDERATIONS
32.02 DESIGN BASIS
32.03 DETAILS OF DESIGN AND CONSTRUCTION
32.04 RECLAIM METERING
32.05 RECLAIM SERVICES AND CONNECTIONS
32.06 SERVICE PIPE, STOPS, FITTINGS, AND SERVICE SADDLES
32.07 RECLAIM MAIN MATERIALS
32.08 RECLAIM MAIN INSTALLATION
32.09 VALVE INSTALLATION
32.10 IDENTIFICATION
32.11 SEPARATION OF WATER MAINS AND SEWERS
32.12 TRENCH PREPARATION AND PIPE BEDDING
32.13 HYDROSTATIC TESTS
32.14 FINAL FLUSHING
32.15 SYSTEM BLOWOFFS AND SUPPLY HYDRANT

BACK TO TABLE OF CONTENTS

Section 32.01 GENERAL CONSIDERATIONS

32.01.01 Types of Reclaim Water Supply Mains

The City will approve plans for reclaim water supply mains and extensions (herein this article referred to as "reclaim mains") only when such mains are designed and constructed in accordance with the criteria set forth in this Manual.

32.01.02 Design Period

Reclaim mains shall be designed for the estimated ultimate tributary population, as derived for the City's approved future land uses and/or historical flows. Reclaim mains shall not include considerations for flows for fire protection demand and shall be subject to system or area shut downs. In the event the latest edition of an approved City of Ocoee Reclaim Master Plan or Study identifies components of the reclaim system that are under consideration, the largest capacity consideration shall be used in the design.

32.01.03 Location

Reclaim mains shall be located in dedicated rights-of-way or utility easements. When installed in rights-of-way, reclaim mains shall, in general, maintain a consistent alignment with respect to the centerline of the road. All reclaim mains located outside of dedicated rights-of-way shall require a minimum 20-foot easement. If a reclaim water main is located adjacent to a right-of-way, a minimum 10-foot easement shall be provided. Additional easement widths shall be provided when the pipe size or depth of cover so dictates. Reclaim mains shall not be placed under retention ponds, tennis courts, and other structures or within 75 feet of public or private potable water supply wells. In general, reclaim mains shall not be located alongside rear lot lines or pond berms unless approved by the City.

Section 32.02 DESIGN BASIS

32.02.01 Average Daily Flow and Peak Flow

Reclaim peak hourly flow shall be used as the design basis for the neighborhood and commercial (local) reclaim systems. Reclaim peak-hour flow shall be based on the application of a 1" depth of irrigation per week applied over two days a week from 5 P.M. to 7 A.M. (15 hours), multiplied by a factor of safety. The factor of safety shall be 3 divided by any alternating irrigation days per address for the area to be serviced.

32.02.02 Reclaim System Hydraulic Modeling

The City of Ocoee maintains a reclaim hydraulic model (Bentley WaterCAD) which is used for but not limited to determining system performances, offsite impacts and residual times. For developments that may substantially add to or impact the City's reclaim system, the Owner/Developer shall initiate the incorporation of the development's elements into the City's model, and the simulation/analysis of the model. Unacceptable operating conditions and/or offsite impacts created by the proposed development shall be remediated by the Owner/Developer.

This effort to be undertaken by the Owner/Developer can be accomplished by either the developer's engineer performing the model work with a City review or by electing to have the City undertake the work. Electing to have the City to perform the work shall require City approval. All costs incurred by the incorporation of and outside reviews by the City shall be at the Owner/ Developer's expense. All final products shall become property of the City.

Section 32.03 DETAILS OF DESIGN AND CONSTRUCTION

32.03.01 Pressure

All reclaim mains shall be designed in accordance with Section 30.02.01 above. The system shall be designed to maintain a minimum pressure of 40 psi 98% of the time. The normal working pressure in the distribution system should be approximately 60 psi. For pressures points greater than 90 psi, special provisions may be required. Design Friction Losses for reclaim mains shall be determined using the Hazen-Williams friction coefficient of C=120. Peak flow shall not exceed 5 fps.

32.03.02 Diameter

Only 4", 6", 8", 12", 16", 20", 24", 30", 36", 42", 48" and 54" diameter reclaim mains shall be permitted. Reclaim mains with a 4” diameter shall be permitted in cul-de-sac areas with a maximum length of 800 feet of pipe. As a minimum, 6” looped systems shall be required in low density residential projects. Where looping of mains is not practical, 8” minimum mains shall be required, unless detailed calculations are submitted to substantiate the sufficiency of a 6” main. In commercial, industrial, and high density residential areas, minimum 8” looped mains shall be required.

32.03.03 Dead Ends

In order to provide increased reliability of service and reduce head loss, dead ends shall be minimized by making appropriate tie-ins wherever practical, as determined by the City. System looping is required wherever possible to increase overall capacity and service. Where dead-end mains occur, they shall be provided with a hydrant or if approved blow-off for flushing purposes. Flushing devices shall be sized to provide flows which will give a velocity of at least 2.5 feet per second in the reclaim main being flushed. No flushing device shall be directly connected to any sewer.

32.03.04 Valves

Valves shall be provided for all branch connections, loop ends, fire hydrant stubs, or other locations as required to provide an operable, easily maintained, and repairable reclaim distribution system. Valves are to be placed so that the maximum allowable length of reclaim main required to be shut down for repair work shall be 500 feet in commercial, industrial or multi-family residential areas, or 800 feet in other areas.

32.03.05 Air Relief Valves

At high points in reclaim mains where air can accumulate, provisions shall be made to remove the air by means of hydrants or automatic air relief valves. Automatic air relief valves shall not be used in situations where flooding of the manhole or chamber may occur. Refer to the Typical City Details attached as part of this Manual.

32.03.06 Chamber Drainage

Chambers, pits or manholes containing valves, blow-offs, meters, or other such appurtenances to a distribution system shall not be connected directly to any storm drain or sanitary sewer, nor shall blow-offs or air relief valves be connected directly to any sewer.

Section 32.04 RECLAIM METERING

32.04.01 General

All reclaim service connections shall be metered. In general, the method of metering shall follow the guidelines listed below. However, the Owner's/Developer's Engineer must obtain approval before finalizing the design of the metering system. Master metering for irrigation for common grounds shall be reviewed and approved by the City Engineer on a case-by-case basis.

32.04.02 Single Family, Duplex, and Multi-Family Subdivisions

Each unit's private irrigation areas shall be individually metered. Joint common irrigation areas shall be master metered. Single and double services shall be installed at property lines as specified in the Typical City Details attached as part of this Manual.

32.04.03 Commercial, Industrial, and Institutional Projects

In general, each building shall be individually metered. Meter(s) shall be located in the public rights-of-way at the property line.

32.04.04 Shopping Centers

Common irrigation areas shall be master metered. Each unit's private irrigation area shall be individually metered. The meters shall be located either in the right-of-way or within a Utility Easement. The meters shall be located within an unpaved area to facilitate removal, repair and/or replacement without damage to paved surfaces.

32.04.05 Meter Installation

All meter boxes shall be installed by the Contractor at finished grade and level. All meters 2” in size and smaller will be installed by the City after payment of applicable fees and charges. All meters 2” in size and smaller shall be installed underground in an approved meter box. Meters larger than 2” shall be installed aboveground. In general, meters larger than 2” shall be located in a meter easement located adjacent to the public right-of-way.

32.04.06 Meter Sizing

Size of all meters shall be determined by the Owner's/Developer's Engineer and approved by the City Engineer. The Owner's/Developer's Engineer shall provide sufficient information on estimated peak flows and low flows so that meter size can be evaluated. The Owner's/Developer's Engineer shall include head-losses through metering device when designing the reclaim system.

Section 32.05 RECLAIM SERVICES AND CONNECTIONS

Reclaim services and connections shall conform to the applicable provisions of this Manual and the Typical City Details attached as part of this Manual. Only 1", 1 ½”, 2", 3", 4", 6", 8", 10” and 12" services shall be permitted. Where reclaim services greater than 12” are required, dual services shall be provided. New services and connections to the reclaim system, either new or existing, shall be made by the Contractor.

Reclaim service piping and connection shall be installed as specified in the Typical City Details attached as part of this Manual. The location of all service lines shall be as specified in the Typical City Details attached as part of this Manual and shall be either single or dual service. On curbed streets, the exact location for each installed service shall be marked by etching or cutting a “W” in the concrete curb. Where no curb exists, locations shall be adequately marked by a method approved by the City.

Section 32.06 SERVICE PIPES, STOPS, FITTINGS, AND SERVICE SADDLES

32.06.01 Service Pipes

All service lines shall be 1”, 1 ½” or 2” standard AWWA C-901-88 PE 3406 (purple) polyethylene tubing, 200 psi rating. Single and double residential service lines shall be 1” diameter. Double service lines shall use 1" x 1" x 1" wye branch (Ford No. Y44-264) or equivalent.

32.06.02 Stops

Corporation stops shall be 1", 1 ½" or 2" brass, equipped with connections compatible with polyethylene tubing and threaded in accordance with specifications in AWWA C-800 and AWWA C-901. Curb stops shall be sized to match the meter size and conform to the specifications in AWWA C-800 and AWWA C-901.

32.06.03 Fittings

Fittings shall be brass, cast and machined in accordance with specifications in AWWA C-800 and AWWA C-901, with compatible polyethylene tubing connections.

32.06.04 Service Saddles

A service saddle may be used for all service line taps. Service saddles shall be double strap, anchored by a minimum 4 bolt pattern on a ductile iron saddle body. The City may require a stainless steel strap and fusion epoxy or nylon coated ductile iron body with stainless steel hardware in areas designated as corrosive.

Section 32.07 RECLAIM MAIN MATERIALS

32.07.01 General

These Specifications cover the pipe, fittings, and accessory items used for reclaim distribution systems.

Pipe used in reclaim distribution systems shall be generally Polyvinyl Chloride Pipe (PVC) with direct burial applications. For directional drill applications High Density Polyethylene Pipe (HDPE) shall be required.

The Contractor shall be responsible for all materials furnished and storage of same, until the date of substantial completion. The Contractor shall replace, at the Contractor's expense, all materials found to be defective or damaged in handling or storage. The Contractor shall, if requested by the City, furnish certificates, affidavits of compliance, test reports, or samples for check analysis for any of the materials specified herein. All pipe delivered to project site for installation is subject to random testing for compliance with the designated specifications.

32.07.02 Pipe Material

All PVC mains of nominal diameter 4" through 12" shall be AWWA C900 SDR18 and mains greater than 12" shall be C905 SCR18. Refer to ARTICLE 33 Horizontal Directional Drilling for HDPE material requirements.

32.07.03 Fittings

Any fittings required shall be mechanical joint ductile iron or gray iron conforming to ANSI/AWWA A-21.10/C-ll0, 250 psi minimum pressure rating, or ductile iron compact fittings 4" through 12" in accordance with ANSI/AWWA A-21.53/C-153.

32.07.04 Joints

Joints for ductile iron pipe and fitting joints shall be push-on or mechanical joints conforming to ANSI/AWWA A-21.11/C-111. Where called for in the plans, restrained or flanged joints shall be provided. Flanged joints shall conform to ANSI Standard B-16.1-125 lb. Restrained joints shall conform to ARTICLE 26 of this Manual.

32.07.05 Resilient Seat Gate Valves

All gate valves 12" and smaller shall be resilient seat gate valves. Such valves shall be resilient seated, manufactured to meet or exceed the requirements of AWWA C-509, latest revision, and in accordance with the following Specifications. Valves shall have an unobstructed waterway equal to or greater than the full nominal diameter of the valve. (See approved Manufacturer's List attached as part of this Manual.)

The valve body, bonnet, and bonnet cover shall be cast iron ASTM A-126, Class B. All ferrous surfaces inside and outside shall have a fusion-bonded epoxy coating. A 2" wrench nut shall be provided for operating the valve. All valves are to be tested in strict accordance with AWWA C-509. The valve shall be operated opening counterclockwise.

The valves shall be non-rising stem with the stem made of cast, forged, or rolled bronze as specified in AWWA C-509. Two stem seals shall be provided and shall be of the O-ring type. The stem nut must be independent of the gate.

The resilient sealing mechanism shall provide zero leakage at the working pressure when installed with the line flow in either direction.

All shut-off valves 16" and larger shall be resilient seat gate with horizontal mechanical gearing and clear passage for pigging devices. Valve shall be American Flow Control Series 2500 NRS "Bevel Gearing Dimensions" or equal.

32.07.06 Valve Boxes

All buried valves shall have cast-iron three-piece valve boxes. Valve boxes shall be provided with suitable heavy bonnets and shall extend to such elevation at, or slightly above, the finished grade surface as directed by the City. The barrel shall be a 2-piece, sliding type, having 5¼" shaft. The upper section shall have a flange at the bottom having sufficient bearing area to prevent settling and shall be complete with cast iron covers. Covers shall be 5¼" square and shall have "RECLAIM" cast into the top for all reclaim mains. The actuating nuts for deeper valves shall be extended to come up to a 4' depth below finished grade.

Care shall be taken while constructing valve boxes to ensure that valve stems are vertical and the cast iron box has been placed over the stem with base bearing on compacted fill and top flush with final grade. Boxes shall have sufficient bracing to maintain alignment during backfilling. Contractor shall remove any sand or undesirable fill from valve box prior to final inspection.

32.07.07 Air Release Valves

The air release valves for use in reclaim mains shall be installed as specified in the Typical City Details attached as part of this Manual and the make and model per the approved Manufacturer's List. Valves shall be provided with a vacuum check to prevent air from reentering the line. The fittings shall be threaded.

Section 32.08 RECLAIM MAIN INSTALLATION

32.08.01 General

Pipe shall be installed in accordance with the manufacturer's specifications and instructions for the type of pipe used and applicable AWWA Standards, such as C-600 and C-603, unless otherwise stated in these Specifications. A 2" jumper connection shall be provided for purposes of filling and testing the installed reclaim line prior to clearance for use. The jumper is to be installed per the Typical City Details attached as part of this Manual.

32.08.02 Pipe Storage and Staging

All types of pipe shall be handled in such a manner as will prevent damage to the pipe or coating. Accidental damage to pipe or coating shall be repaired to the satisfaction of the City or be removed from the job. When not being handled, the pipe shall be supported on timber cradles or on properly prepared ground, graded to eliminate all rock points and to provide uniform support along the full length. When being transported, the pipe shall be supported at all times in a manner which will not permit distortion or damage to the lining or coating. Any unit of pipe that, in the opinion of the City, is damaged beyond repair by the Contractor shall be removed from the site of the work and replaced with another unit. Joint gaskets shall be stored in a clean, dark, dry location until immediately before use.

Dirt or other foreign material shall be prevented from entering the pipe or pipe joint during handling or laying operations, and any pipe or fitting that has been installed with dirt or foreign material in it shall be removed, cleaned and re-laid. At times when pipe-laying is not in progress, the open ends of the pipe shall be closed by a water-tight plug or by other means approved by the City to ensure absolute cleanliness inside the pipe.

Section 32.09 VALVE INSTALLATION

All valves shall be inspected upon delivery in the field to insure proper working order before installation. They shall be set and jointed to the pipe in the manner as set forth in the AWWA Standards for the type of connection ends furnished. All valves and appurtenances shall be installed true to alignment and rigidly supported. Any damage to the above items shall be repaired to the satisfaction of the City before they are installed. Valves shall be installed in a vertical position and be provided with a standard valve box so arranged that no shock will be transmitted to the valve. The box shall be vertically centered over the operating nut, and the cast iron box cover shall be set flush with the road bed or finished surface. After installation, all valves shall be subjected to the field test for piping as outlined in these Specifications. Should any defects in materials or workmanship appear during these tests, the Contractor shall correct such defects to the satisfaction of the City.

Flanged joints shall be made with hot dipped galvanized bolts, nuts and washers. Mechanical joints shall be made with mild corrosion-resistant alloy steel bolts and nuts. All exposed bolts shall be painted the same color as the pipe. All buried bolts and nuts shall be heavily coated with 2 coats of bituminous paint.

Section 32.10 IDENTIFICATION

In order to preclude possible interconnections and/or improper use of reclaim water, all reclaim lines, tubing, meter boxes and locate wire/tape shall be purple Pantone 522c in color. PVC or HDPE reclaim mains shall be marked with a continuous stripe within the top 90° of the pipe. Said stripe shall be a minimum of 2" in width and shall be light purple in color. Backfill shall not be placed for 30 minutes if field painting is required. In addition, all pipe shall be buried with identification tape above the top of the pipe, see the Typical City Details attached as part of this Manual. The tape shall indicate the presence of the reclaim main plainly on the tape face. Indicator tape buried with PVC pipe shall be able to be detected by standard metal detection equipment.

All new reclaim usages shall include the proper placement of signage notifying the public of the use of reclaim. Subdivisions shall require signs located at each entrance and all common/landscape areas. Commercial sites shall have signs located where public could come in contact with reclaim water. See Typical City Details as part of this Manual for sign details.

Section 32.11 SEPARATION OF WATER MAINS AND SEWERS

32.11.01 General

No reclaim main shall pass through or come in contact with any part of a sewer manhole. Individual septic tanks must be located and avoided. Reclaim mains shall be laid such as to ensure no cross-connection, line confusion and/or improper connection will occur with potable water mains and facilities. Water main shall have a minimum of 3' vertical and 18" horizontal separation, outside to outside, or the separation requirements of F.A.C. Rule 62-555.314 shall be met as a minimum, whichever is greater.

Section 32.12 TRENCH PREPARATION AND PIPE BEDDING

32.12.01 Trench Preparation and Pipe Bedding

Applicable provisions of ARTICLE 6 of this Manual shall apply. Also refer to the Typical City Details attached as part of this Manual.

32.12.02 Pipe Preparation, Handling and Laying

All pipe and fittings shall be inspected prior to lowering into trench to ensure no cracked, broken, or otherwise defective materials are being used. Contractor shall clean ends of pipe thoroughly and remove foreign matter and dirt from inside of pipe and keep clean during and after laying.

Contractor shall use proper implements, tools, and facilities for the safe and proper protection of the work. Contractor shall lower pipe into the trench in such a manner as to avoid any physical damage to the pipe and shall remove all damaged pipe from the job site. Care shall be taken to not drop or dump pipe into trenches under any circumstances.

Contractor shall prevent foreign material from entering the pipe while it is being placed in the trench. Contractor shall remove all foreign material from the pipe or joint ring before the next pipe is placed. If the pipe laying crew cannot put the pipe into the trench and in place without getting earth into the pipe, the City may require that snugly-fitted, tightly-woven canvas bags be placed over each end before lowering the pipe. The bags shall be left in place until the connection is to be made to the adjacent pipe. During laying operations, Contractor shall keep debris, tools, clothing, or other materials out of the pipe.

All pipe shall be installed in accordance with AWWA C-600 unless such Standards conflicts with this Manual, in which case this Manual shall apply. Contractor shall cut pipe only as necessary to comply with alignment shown on the plans. Flame cutting of pipe shall not be allowed. Contractor shall provide special tools and devices, such as special jacks, chokers, and similar items required for proper installation. Lubricant for the pipe gaskets shall be furnished by the pipe manufacturer, and no substitutes shall be permitted under any circumstances.

32.12.03 Trench Dewatering and Drainage Control

Contractor shall prevent water from entering the trench during excavation and pipe laying operations to the extent required to properly grade the bottom of the trench and allow for proper compaction of the backfill. Pipe shall not be laid in water.

32.12.04 Survey Line and Grade

Pipe shall be laid to the lines and grades shown on the plans. The Contractor shall provide line and grade stakes at a 100' maximum spacing and at all lines and/or grade change locations. Contractor shall provide Temporary Bench Marks at maximum 1,000' intervals. The minimum pipe depth shall be 3' below the finished grade surface or 3' below the elevation of the edge of pavement of the road surface, whichever is greater.

32.12.05 Laying of Pipes on Curves

Long radius curves, either horizontal or vertical, may be laid with standard pipe by deflections at the joints. Maximum deflections at pipe joints and laying radius for the various pipe lengths shall be as recommended by the pipe manufacturer.

32.12.06 Pipe Restraining and Thrust Block

Requirements specified in ARTICLE 26 of this Manual shall apply.

32.12.07 Bedding and Backfill for Pipes

Requirements specified in ARTICLE 6 of this Manual shall apply.

Section 32.13 HYDROSTATIC TESTS

32.13.01 General

Hydrostatic tests shall consist of pressure test and leakage tests. Hydrostatic tests shall be conducted on all newly laid pressure pipes, joints and valves including all service lines to the curb stops. Air testing of pressure pipes shall not be permitted under any circumstances. Tests shall not be made on sections exceeding 2,000'. Contractor shall furnish all necessary equipment and material, make all taps, and furnish all closure pieces in the pipe as required. Equipment to be furnished by the Contractor shall include graduated containers, pressure gauges, hydraulic force pumps, and suitable hoses and piping. The City will monitor and approve a satisfactory test.

The Contractor may conduct hydrostatic tests after the trench has been partially backfilled with the joints left exposed for inspection for informational purposes only. The hydrostatic tests for acceptance shall only be conducted after the trenches have been completely backfilled and compacted as specified. Where any section of pipe is provided with concrete thrust blocking, pressure tests shall not be made until at least 5 days have elapsed after the thrust blocking is installed. If high-early cement is used for the concrete thrust blocking, the time may be reduced to 24 hours if the City concurs that the concrete has cured and reached adequate strength.

32.13.02 Testing Criteria

All pipe sections to be pressure tested shall be subjected to a hydrostatic pressure of 150 psi. The duration of each pressure test shall be for a period of 2 hours. If during the test, the integrity of the tested line is in question, the City may require a 6 hour pressure test. The basic provisions of AWWA C-600 shall be applicable.

32.13.03 Procedure for Pressure Test

Each section of pipe to be tested, as determined by the City, shall be slowly filled with water and the specified test pressure shall be applied by means of a pump connected to the pipe in a satisfactory manner. Before applying the specified test pressure, all air shall be expelled from the pipe. To accomplish this, taps shall be made and appropriate valves installed to ensure bleeding of all air from the main. If defective pipes, fittings, valves, or hydrants are discovered in consequence of this pressure test, all such items shall be removed and replaced by the Contractor with sound material and the test shall be repeated until satisfactory results are obtained. Provisions of AWWA C-600, where applicable, shall apply.

32.13.04 Procedure for Leakage Test

After completion of the pressure test, a leakage test shall be conducted to determine the quantity of water lost by leakage under the specified test pressure. Applicable provisions of AWWA C-600 shall apply.

Allowable leakage in gallons per hour for pipeline shall not be greater than that determined by the formula:

$$L = \frac{SD\,(p)^{1/2}}{133{,}200}$$

Note: L = Allowable leakage in gallons per hour.
S = Length of pipe tested, in feet.
D = Nominal diameter of the pipe in inches.
P = Average test pressure during leakage test in pounds per square inch gauge.

Leakage is defined as the quantity of water to be supplied in the newly laid pipe or any valved section under testing, which is necessary to maintain the specified leakage test pressure after the pipe has been filled with water and the air expelled. Should any of the test pipe laid disclose leakage greater than that allowed, Contractor shall locate and replace or repair the defective joints, pipe or valve until the leakage from subsequent testing is within the specified allowance.

Section 32.14 FINAL FLUSHING AND TESTING

All material, sediment and debris shall be thoroughly removed from the newly laid pipe at its extremity until the replacement water throughout its length is clear, including all mains and services. Repeating of the cleaning procedures shall be required in the event that material, sediment and/or debris is observed or system continuity is interrupted.

32.14.01 Pigging/Swabbing Procedures

a. All new reclaimed water mains shall be hydraulically or pneumatically cleaned with a polypropylene swabbing device to remove dirt, sand, and debris from main.

b. If swabbing access and egress points are not provided in the design drawings, it will be the responsibility of the CONTRACTOR to provide temporary access and egress points as required for the cleaning.

c. Passage of cleaning poly swabs through the system shall be constantly monitored, controlled and all poly swabs entered into the system shall be individually marked and identified so that the exiting of the poly swabs from the system can be confirmed.

d. Cleaning of the system shall be done in conjunction with the initial filling of the system for its hydrostatic test.

e. The CONTRACTOR shall insert flexible polyurethane foam "swabs" (2 pounds per cubic foot density) complete with rear polyurethane drive seal, into the first section of pipe. The "swabs" shall remain there until the pipeline construction is completed.

f. The line to be cleaned shall only be connected to the existing distribution system at a single connection point.

g. Locate and open all new in-line valves beyond the point of connection on the pipeline to be cleaned during the swabbing operation.

h. At the receiver or exit point for the poly swab, the CONTRACTOR is responsible for creating a safe environment for collection of debris, water and the swab. Considerations shall be made for protecting surrounding personnel and property and safe retrieval of the swab.

i. Only City personnel shall operate the supply valve from the existing distribution system. Cleaning and flushing shall be accomplished by propelling the swabbing swab down the pipeline to the exit point. Flushing shall continue until the water is completely clear and swab is retrieved.

    1. Re-apply a series of individual swabs in varying diameters and/or densities as required, to attain proper cleanliness of pipeline.

2. Swabbing speed shall range between two and five feet per second.

j. After the swabbing process, pressure testing of the pipe shall be completed in accordance with this ARTICLE.

Section 32.15 SYSTEM BLOWOFFS AND SUPPLY HYDRANT

32.15.01 Spacing

System blow offs shall be required on each reclaim main run with a maximum spacing of 3,000'. Where reclaim mains are 12" or greater, or system blow offs are at extreme ends of the reclaim system, the system blow off shall be replaced with supply hydrants. The City Engineer shall approve the replacement of a system blow off with supply hydrant. Fire hydrants as specified in ARTICLE 31 shall be used as supply hydrants and shall be painted purple.

ARTICLE 33

HORIZONTAL DIRECTIONAL DRILLING

Index

33.01 GENERAL CONSIDERATIONS
33.02 DESIGN BASIS
33.03 DETAILS OF DESIGN AND CONSTRUCTION
33.04 PRODUCTS
33.05 EXECUTION

BACK TO TABLE OF CONTENTS

Section 33.01 GENERAL CONSIDERATIONS

33.01.01 Type of Horizontal Installation

The City will approve plans for horizontal directional drill installation of pipe and /or casing pipe for utility extensions as required for crossing under roadways, rail lines, streams, or other vertical conflicts as necessary in accordance with approved design and recommendation of the Engineer of Record. Such installations may be required to meet minimum standards as set forth by other jurisdictions having authority over the feature being crossed including Orange County, FDOT, or Railroad. The utility mains and extensions shall be installed in conjunction with the horizontal drilling only when such mains are designed and constructed in accordance with the criteria set forth in other Articles of this Manual.

Section 33.02 DESIGN BASIS

33.02.01 General

A. Horizontal directional drilling is a method of installation commonly referred to as directional drilling or guided horizontal boring.

B. Refer to applicable water, reclaimed water and force main design standards in ARTICLE 29, ARTICLE 31, and ARTICLE 32.

33.02.02 Location

A. Directional drilling is allowed for pressurized mains and is not allowed for gravity mains.

B. Directional drilling of restrained PVC and ductile iron is allowed in City of Ocoee right-of-way. Ductile iron shall only be utilized for water and reclaimed water mains.

C. Directional drilling of HDPE pipe shall be limited to wetlands, canal crossings and road crossings as approved by the City Engineer. The City will consider allowing directional drilling for other circumstances with specific approval, such as limited R/W or easement areas that conventional open cut cannot be performed due to other utilities or conflicts. A written request must be submitted to the City that outlines the need for directional drilling.

Section 33.03 DETAILS OF DESIGN AND CONSTRUCTION

33.03.01 General

A. Horizontal alignment shall be as shown on the PLANS. The pipe shall have a minimum 36 inches of cover.

B. The maximum depth shall be determined based on the size of the drill and the necessary clearance from the existing or proposed utilities or feature being crossed.

C. For subaqueous crossings, a minimum cover of five feet shall be maintained over the pipe measured from the lowest part of the stream bed at the point of crossing.

D. Compound curvatures may be used, but shall not exceed the maximum deflections, as set forth by the pipe manufacturer or AWWA Standards, whichever is more stringent.

E. Entry angle shall not exceed 15 degrees. Exit angle shall be 6 to 12 degrees to facilitate pullback. Entry angle and exit angle shall not exceed manufacturer recommendations on deflection, angle or radius of curvature.

F. A cross section drawn to scale shall be provided on the PLANS showing the proposed bore path and all existing utilities within the directional drill corridor.

33.03.02 Scope of Work

The WORK specified in this section consists of furnishing and installing underground utilities using the horizontal directional drilling (HDD) method of installation, also commonly referred to as directional boring or guided horizontal boring for pressure pipe. This WORK shall include all piping services, equipment, materials and labor for the complete and proper installation testing, restoration of underground utilities and environmental protection and restoration.

33.03.03 Quality Assurance

A. Qualifications:

1. Directional drilling CONTRACTOR (or SUBCONTRACTOR) shall have a minimum of four years experience constructing water, wastewater, or reclaimed water experience to include pipelines of the same or larger diameter and the same or greater lengths. All pipe and appurtenances of similar type and material shall be furnished by a single manufacturer.

2. The CONTRACTOR's operations shall be in conformance with the Directional Crossing Contractors Association (DCCA) published guidelines (latest edition) and pipe manufacturer's guidelines and recommendations.

Section 33.04 PRODUCTS

33.04.01 General

A. The directional drilling equipment shall consist of the following:

1. A directional drilling rig of sufficient capacity to perform the bore and pull-back of the pipe;

2. A drilling fluid mixing, delivery and recovery system of sufficient capacity to complete the crossing;

3. A drilling fluid recycling system to remove solids from the drilling fluid so that the fluid can be reused;

4. A magnetic guidance system to accurately guide boring operations,

5. A vacuum truck of sufficient capacity to handle the drilling fluid volume; and

6. Trained and competent personnel to operate the system.

B. All equipment shall be in good, safe operating condition with sufficient supplies, materials and spare parts on hand to maintain the system in proper working order.

33.04.02 Drilling System

The directional drilling machine shall consist of a hydraulically powered system to rotate, push and pull hollow drill pipe into the ground at a variable angle while delivering a pressurized fluid mixture to a guidable drill (bore) head. The machine shall be anchored to the ground to withstand the pulling, pushing and rotating pressure required to complete the crossing. The hydraulic power system shall be self contained with sufficient pressure and volume to power drilling operations. Hydraulic system shall be free of leaks. Rig shall have a system to monitor and record maximum pullback pressure during pullback operations. The rig shall be grounded during drilling and pullback operations. There shall be a system to detect electrical current from the drilling string and an audible alarm that automatically sounds when an electrical current is detected.

33.04.03 Pipe

A. Pipe shall be HDPE pipe with ductile iron pipe outside diameters in accordance with AWWA C900 (C905) or C906 respectively. The dimension ratio shall be verified by the CONTRACTOR based on the pipe, joint and material pull strength required for the directional drilling. Alternate material such as PVC or DIP may be allowed in special cercumstances and must be approved by the City Engineer. Alternate material shall comply with specification as outlined by this manual and other conditions as required by approval by the City Engineer.

B. HDPE Pipe

1. HDPE pipe and related fittings shall be made with prime virgin resins exhibiting a minimum cell classification as defined in ASTM D3350 and meeting the PE 3408 code designation with maximum dimension ratios equal to the following.

Table 33-1. Maximum Dimension Ratios for HDPE Pipe.

Type of Pipe System	Maximum Dimension Ratio
Wastewater	11
Reclaimed Water	11
Water	11

2. HDPE pipe 4-inch and larger nominal diameter shall be joined by means of zero leak-rate butt (thermal heat) fusion welds and/or approved flanged joints. Joints shall provide axial pullout resistance. Compression style fittings shall not be allowed. Pipe shall meet the requirements of ANSI/AWWA C906, and have an outside diameter dimension of ductile iron pipe. Flanged joints shall not be used below finished grade for horizontal directional drilling applications.

3. HDPE pipe shall have been continuously marked by the manufacturer with permanent printing indicating at a minimum the following.

   a. Nominal size (inches);
   b. Dimension ratio (DR);
   c. Pressure rating (psi);
   d. Trade name;
   e. Material classification (PE 3408);
   f. Plant, extruder and operator codes;
   g. Resin supplier code;
   h. Date produced; and
   i. HDPE pipe used for portable water mains shall bear the NSF Seal of Approval.

4. HDPE pipe shall be black in color with permanent colored stripes extruded into the pipe length or shall be one solid color, per the applicable service.

Table 33-2. Pipe Color.

Pipe Use	Color Coding
Potable Water	Blue
Wastewater	Green
Reclaimed Water	Purple

5. Installation Curvature:

   The pipeline curvature shall not have a radius less than as shown in Table 33-3, or exceed the manufacturers suggested minimum bending radius.

Table 33-3. HDPE Pipe Deflection Information.

Pipe Diameter (inches)	Minimum Radius of Curvature (feet)	Offset per 20-ft Length (inches)
4	23	9.3
6	34	6.1
8	44	4.6
10	56	3.5
12	67	3.0
16	88	2.3

33.04.04 Drilling Fluids

Drilling fluids shall consist of a mixture of potable water and gel-forming colloidal material, such as bentonite or a polymer surfactant mixture producing slurry of a consistency sufficient to expedite the pull-back installation within the standards of practice detailed in the DCCA guidelines, (latest edition).

Section 33.05 EXECUTION

33.05.01 Personnel Requirements

A. Responsible representatives of the CONTRACTOR and SUBCONTRACTOR(s) shall be present at all times during directional drilling operations. A responsible representative as specified herein is defined as a person experienced in the type of WORK being performed and who has the authority to represent the CONTRACTOR in a routine decision making capacity concerning the manner and method of carrying out the WORK.

B. The CONTRACTOR and SUBCONTRACTOR(s) shall have sufficient number of competent workers on the project at all times to ensure the utility placement is made in a timely, satisfactory manner. Adequate personnel for carrying out all phases of the directional drilling operation (where applicable: tunneling system operators, operator for removing spoil material, and laborers as necessary for various related tasks) must be on the job site at the beginning of WORK. A competent and experienced supervisor representing the CONTRACTOR or SUBCONTRACTOR that is thoroughly familiar with the equipment and type of WORK to be performed, must be in direct charge and control of the operation at all times. In all cases, the supervisor must be continually present at the project site during the directional drilling operation.

33.05.02 Work Plan

A. Work Plan: Prior to beginning WORK, the CONTRACTOR must submit a Work Plan to The City Engineer detailing the procedure and schedule to be used to execute the project. The WORK plan should include the following.

1. A description of all equipment to be used;
2. Down-hole tools;
3. A list of personnel and their qualifications and experience;
4. List of SUBCONTRACTORs;
5. A schedule WORK activity;
6. A safety plan, traffic control plan (if applicable);
7. An environmental protection plan and;
8. Contingency PLANS for possible problems.

WORK plan should be comprehensive, realistic and based on actual working conditions for this particular project. Plan should document the requirements to complete the project.

B. Equipment:

1. The CONTRACTOR will submit specifications on directional drilling equipment to be used to ensure that the equipment will be adequate to complete the project. Equipment shall include but not be limited to the following.

   a. Drilling rig;
   b. Mud system;
   c. Mud motors (if applicable);
   d. Down-hole tools;
   e. Guidance system and;
   f. Rig safety systems.

2. Calibration records for guidance equipment shall be included. Specifications for any drilling fluid additives that the CONTRACTOR intends to use or might use shall be submitted.

33.05.03 Coordination of the Work

A. The CONTRACTOR shall notify the City Engineer at least three days in advance of starting WORK. In addition, the actual crossing operation shall not begin until An engineering representative is present at the project site and agrees that proper preparations for the crossing have been made. City Engineer's approval for beginning the crossing shall in no way relieve the CONTRACTOR from the ultimate responsibility for the completion of the WORK.

B. The CONTRACTOR and the City Engineer shall select a mutually convenient time for the crossing operation to begin in order to avoid schedule conflicts.

33.05.04 Procedure

The installation of appropriate safety and warning devices in accordance with the "FDOT Manual on Traffic Control and Safe Practices" shall be completed prior to beginning WORK.

33.05.05 Installation

A. Erosion and sedimentation control measures and on-site containers shall be installed to prevent drilling mud from spilling out of entry and/or exit pits. Drilling mud will be disposed of off-site in accordance with local, state and federal requirements and/or permit conditions.

1. No other chemicals or polymer surfactant shall be used in the drilling fluid without written consent of the City Engineer and after a determination is made that the chemicals to be added are not harmful or corrosive to the facility and are environmentally safe.

B. Pilot Hole:

Pilot hole shall be drilled on bore path with no deviations greater than two percent of depth over a length of 100 feet. In the event that pilot does deviate from bore path more than two percent of depth in 100 feet, the CONTRACTOR will notify ENGINEER. The ENGINEER may require the CONTRACTOR to pull-back and re-drill from the location along bore path before the deviation.

C. Reaming:

Upon successful completion of pilot hole, the CONTRACTOR will ream borehole to a minimum of 25 percent greater than outside diameter of pipe using the appropriate tools. CONTRACTOR will not attempt to ream at one time more than the drilling equipment and mud system are designed to safely handle.

D. Pullback:

After successfully reaming borehole to the required diameter, CONTRACTOR will put the pipe through the borehole. In front of the pipe will be a swivel and barrel reamer to compact bore hole walls. Once pullback operations have commenced, operations must continue without interruption until pipe is completely pulled into borehole. During pullback operations, the CONTRACTOR shall not apply more than the maximum safe pipe pull pressure at any time. A break away head rated at the maximum safe pull pressure shall be utilized.

E. As-built variance from the designed bore path shall not exceed plus or minus one foot in the vertical plane and plus or minus two feet in the horizontal plane. The CONTRACTOR shall submit any proposed deviations from the design bore path by submittal to the City Engineer for approval.

F. The pipe entry area shall be graded to provide support for the pipe to allow free movement into the borehole. The pipe shall be guided in the borehole to avoid deformation of, or damage to, the pipe by the use of support rollers, etc.

G. If unexpected subsurface conditions are encountered during the bore, the procedure shall be stopped. The installation shall not continue until the OWNER and ENGINEER have been consulted.

H. The pipe shall be pulled back through the borehole using the wet insertion construction technique. The pipe shall be installed full of water.

I. The pipe shall be installed in a manner that does not cause upheaval, settlement, cracking, movement or distortion of surface features.

J. A boring log shall be kept with horizontal and vertical location every 10 feet. In addition, horizontal location of the bore shall be marked in the field during the bore. The SURVEYOR shall locate these marks and include this information with the bore depths in the Record Drawings. The Surveyor may make a note on the drawing page containing the directional drill and provide an exception for the directional drill only, as the directional drill route cannot be uncovered and physically located.
Log should also contain drilling fluid pressure and drilling advancement and pull back rates.

K. Locating wire shall be attached to the pipe. A minimum of three (3) locating wires shall be attached at different radial locations around the pipe to ensure continuity in at least one wire subsequent to installation. Failure of continuous continuity in the locating wire, at the discretion of the engineering representative, shall result in abandonment and reinstallation of the directional drill.

33.05.06 Field Testing

A. PVC Pipe:
Perform hydrostatic testing for leakage following installation in accordance with the applicable test sections.

B. HDPE Pipe:

1. After installation the pipe shall be tested in accordance with the MANUAL with the following modifications:

a. Test Duration: The total test time including initial pressurization, initial expansion and time at test pressure, must not exceed eight hours. If the test is not completed due to leakage, equipment failure, etc., the test section shall be depressurized and allowed to “relax” for a minimum of eight hours before it is brought back up to test pressure. The test procedure consists of initial expansion phase and leakage test phase.

b. Initial Expansion Phase: During the initial expansion phase, the test section is pressured to the test pressure and enough make-up liquid is added each hour for three hours to return to test pressure.

c. Leakage Test Phase: The leakage test phase follows immediately and shall be either two or three hours in duration. At the end of the time test, the test section shall be returned to test pressure by adding a measured amount of liquid. The amount of make-up liquid added shall not exceed the values provided in Table 33-4 plus allowable leakage.

Contractor shall be required to pressure test the HDPE main prior to installation of the main.

Table 33-4. Allowance for Make-up Water Under Test Pressure*								
Test Duration (hours)	Pipe Diameter (inches)							
	2	4	6	8	12	16	20	24
	Allowance/100 feet of Pipeline (gallons)							
2	0.11	0.25	0.60	1.00	2.30	3.30	5.50	8.90
3	0.19	0.40	0.90	1.50	3.40	5.50	8.00	13.30

**Applies to test period and not to initial expansion phase*

C. Pressure Testing:

The test pressure for the pipe shall be 150 psi for water and reclaimed water and 150 psi for wastewater.

D. Mandrel Testing:

Perform mandrel testing through the entire length of the installed pipe. The mandrel size shall be 90 percent of the inside diameter of the pipe.

ARTICLE 34

STORMWATER MANAGEMENT

Index

34.01	**GENERAL**
34.02	**DESIGN STANDARDS**
34.03	**DESIGN STORM (minimum)**
34.04	**DRAINAGE AREA GEOMETRY**
34.05	**MATERIAL AND DESIGN SPECIFICATIONS**
34.06	**FLOOD PRONE AREAS**

BACK TO TABLE OF CONTENTS

Section 34.01 GENERAL

The purpose of this ARTICLE is to provide design criteria for proposed stormwater management systems within the City of Ocoee. The proposed stormwater management system shall comply with this ARTICLE, the City of Ocoee Comprehensive Plan and City of Ocoee Land Development Code. In addition, while this ARTICLE is intended to be the minimum standard, guidelines and criteria for the design of stormwater management systems in the City of Ocoee, other regulatory agencies and/or government entities by the State statutes or by political boundaries also have jurisdiction. Most of these agencies or government entities have established design criteria for stormwater management. In some cases, established design parameters of those agencies contain conflicting standards or criteria. In the case of conflicting criteria, it is the intent of this ARTICLE to have the most stringent regulations govern. The following agencies and government entities may have jurisdiction within the City of Ocoee:

- St. Johns River Water Management District
- Florida Department of Transportation
- Florida Department of Environmental Protection
- Orange County Environmental Protection Department
- U.S. Army Corps of Engineers
- Federal Emergency Management Agency

Section 34.02 DESIGN STANDARDS

To comply with the foregoing performance Standards, the proposed stormwater management system shall conform to the following design Standards:

A) Side slopes and bottoms of all retention areas shall have grass or other landscape material cover. The maximum side slopes of retention areas are given within this ARTICLE. Landscaping of maintenance berms is prohibited unless approved by City Engineer.

B) Spillways or other entrance channels to retention areas shall be designed to prevent scouring and flushing of these retention areas by heavy rains.

C) Dry retention systems shall be designed and function such that the water quality volume shall be recovered within 3 days (72 hours) in accordance with the SJRWMD criteria. If this is not accomplished by percolation and/or evaporation, the retention area must be improved and approved by the City Engineer to meet the performance is requirements.

D) Wet Detention/Retention systems shall be designed to meet the SJRWMD design and performance criteria. If the design CRITERIA is not accomplished following construction, the system must be improved and approved by the City Engineer to meet the performance requirements.

E) Closed Basin or Land Locked Lake Criteria: Proposed stormwater management systems located within a closed basin and/or land locked lake system with no positive outfall to a stream or river that ultimately discharges to the ocean, the proposed design shall retain the total volume of runoff from the 100-year; 24-hour storm event (10.6-inches) for the post-developed site. The total recovery of the 100-year; 24-hour retention volume should occur within 14 days after the storm event. If the infiltration credit during the storm event is included in the recovery analysis, seepage and infiltration rates will have to be certified by a geotechnical engineer licensed to practice in the State of Florida. For pre-existing developed conditions, the Developer/Owner will only need to retain and recover 100 percent of the runoff generated from the increase in impervious area or the pre-development verse post-development net increase of runoff volume, whichever is greater.

F) Hydraulic design criteria: The design engineer must submit drainage computations for the hydraulic design of the proposed secondary drainage systems. Specifically, storm sewer systems shall be designed and analyzed to provide sufficient conveyance capacity for the ten-year storm event (Rational method) to prevent upstream surcharging even when the downstream outlet is experiencing tailwater submergence. Roadway spread of water should also be analyzed with inlet spacing based upon both allowable spread width and inlet capacity for the ten-year storm event (Rational method).

G) The proposed stormwater management system shall be designed to accommodate the stormwater that originates within the development and stormwater that flows onto or across the development from adjacent lands.

H) The proposed stormwater management system shall be designed to function properly for a minimum 20 year life.

I) The design and construction of the stormwater management system shall be certified as meeting the requirements of this ARTICLE by a Professional Engineer registered in the State of Florida.

J) No surface water may be channeled or directed into a sanitary sewer.

K) Dredging, clearing of vegetation, deepening, widening, straightening, stabilizing or otherwise altering natural surface waters shall be minimized.

L) Natural surface water shall not be used as sediment traps during or after development.

M) For aesthetic reasons and to increase shoreline habitat, the shorelines of detention and retention areas shall be sinuous rather than straight.

N) Water reuse and conservation shall, to the maximum extent practicable, be achieved by incorporating the stormwater management system into irrigation systems serving the development. (If Water Management District allows.)

O) Vegetated buffers of sufficient width to prevent erosion shall be retained or created along the shores, banks or edges of all natural or man-made surface waters.

P) Littoral zones for wet detention ponds shall meet the Saint Johns River Water Management District requirements.

Q) In phased developments the stormwater management system for each integrated stage of completion shall be capable of functioning independently as required by this ARTICLE.

R) All detention and retention basins shall be adequately accessible for maintenance from streets or public rights-of-way.

S) Inlets shall be spaced in such a manner as to accept 100% of the design runoff. The maximum allowable gutter run shall be 600 feet. The actual required inlet spacing shall depend on the characteristics of each particular site. Manholes, in accordance with ARTICLE 17, shall be required at the end of each line, and at all changes in grade, size and alignment.

T) Specifications shall include a section outlining the proposed method of controlling soil erosion during construction. Prior to approval of the Development Plan a Stormwater Pollution Prevention Plan must be submitted to the City Engineer for review and approval in accordance with the City's LDC.

U) All drainage plans shall be subject to approval by the City Engineer or his Designee. Plan submission shall include clear engineering calculations showing the method of design, including soil information as required by the City Engineer, and existing, as well as proposed, topography.

V) The required amount of treatment volume for each development shall be based on the Saint Johns River Water Management District regulations.

W) Discharge from new development shall remain the same as pre-developed flow patterns.

X) The City Engineer, at his discretion, may require additional requirements when a project discharges into areas currently under drainage distress.

Y) All non-conventional retention/detention systems, such as but not limited to exfiltration systems, are not acceptable unless reviewed and approved by City Engineer. Exfiltration type systems must meet the SJRWMD design criteria. Design parameters must be accompanied with signed and sealed Geotchnical Subsurface Investigation with design parameters demonstrating successful recovery of required water quality and quantity volumes.

Section 34.03 DESIGN STORM (minimum)

A)	Retention/Detention basins with positive outfall flows (to Lake Apopka)	25 year, 24 hour (8.5")	Attenuate peak to pre-developed rate
B)	Retention/Detention basins (within Closed Basins and/or Land Locked Lakes)	100 year, 24 hours (10.6”)	Retain increased volume, attenuate peak flow to pre-developed rate
C)	Stormwater Management Systems within FEMA Flood Prone Areas	100 year, 96 hours (14.4”)	Retain increased volume, attenuate peak flow to pre-developed rate
D)	Collection and conveyance systems (residential streets)	10 year, 1 hour	
E)	Collection and conveyance systems (collection and arterial roads)	25 year, 1 hour	
F)	Canals	25 year, 24 hour	

Section 34.04 DRAINAGE AREA GEOMETRY

A)	Ponds	Maximum side slope: 5:1 - Dry pond 5:1 to 2-ft below normal water level, then 2:1 to pond bottom - Wet pond
B)	Fenced Ponds	Not allowed
C)	Maintenance Berms	Minimum width: 10'
D)	Easement Widths	Minimum width: 20'

All pond and swale side slopes shall be sodded, and bottoms shall be seeded and mulched, except areas designed and approved as littoral zones. Shorelines shall be sinuous rather than straight, so that the length of the shoreline is maximized for growth of littoral vegetation and pollution attenuation.

Section 34.05 MATERIAL AND DESIGN SPECIFICATIONS

A) Conveyance Pipe

1) Minimum diameter for conveyance pipe shall be 15 inches.

2) Conveyance pipe shall be of reinforced concrete, unless otherwise approved by City Engineer or his Designee.

3) Minimum slope shall be that which produces a minimum flow of 2 ft/sec at low flow.

4) Maximum run between structures or terminating ends shall be 500 feet.

B) Underdrain Pipe

1) Minimum diameter for underdrain pipe shall be 8 inches.

2) Material

a) Polyethylene tubing, satisfying AASHTO M-252 (ADS with drain guard or approved equal.

b) PVC, satisfying ASTM D-3033.

c) Aluminum, satisfying AASHTO M-196.

3) Filter aggregate: FDOT 902-4.

4) Filter fabric: Mirafi 140 or approved equal.

C) Design pipe velocity shall normally be less than 10 fps.

D) Maximum hydraulic grade line shall be one (1) foot below finished edge of pavement elevation for 10 year storm, 0.5 feet below finished edge of pavement elevation for 25 year storm in sump locations..

E) See ARTICLE 17 of this Manual for Inlet and Structure Specifications.

F) Fencing of stormwater management areas shall not be allowed.

Section 34.06 FLOOD PRONE AREAS

The floodplain is that area subject to inundation during the 100 year; 24 hour storm event (rainfall depth in accordance with jurisdictional agency). The floodway is that portion of the floodplain that must remain clear of encroachment and shall not exceed the 100 year base flood elevation established on the effective floodplain maps and/or as determined by the City Engineer.

Encroachment may be allowed within the one hundred (100 year floodplain, with compensating storage.

All development within the areas of the 100 year floodplain as delineated on the official Flood Insurance Rate Maps (FIRM) or as determined by the City Engineer, shall comply with the following requirements:

1) The lowest floor elevation shall be at least 2 feet above the elevation of the 100 year, 24 hour storm, or at the maximum stage for the 100 year, 4 day storm event (rainfall depth in accordance with jurisdictional agency), whichever is higher.

2) For commercial or industrial developments, flood proofing may be substituted in lieu of elevating the lowest floor.

3) Compensating storage must be provided for all floodwater displaced by the proposed development below the 100 year 24 hour base flood elevation established by FEMA. Generally, compensating storage must be calculated between the existing 100 year base flood elevation and wet season groundwater/water table elevation. The latter elevation must be determined by a qualified geotechnical engineer, and his report shall identify the historical wet season groundwater/water table; recommend bottom elevations for compensating storage areas; and address the ability of said areas to remain dry and available for floodwater storage.

4) Special attention must be given to the project area relationship with the floodplain. An “active” site contributes a pre-development runoff volume in excess of that which is stored on the site during the 100 year storm. A “passive” site contributes a runoff volume less than that which is stored on the site during the 100 year storm. Passive sites must provide special assurances that encroachment is not occurring due to the construction of the

development or its ponds. Compensating storage may be claimed in the retention/detention pond system provided it is above the maintained water elevations, and berm elevations are such that the pond system can be inundated during the 100 year storm and still provide the required flood protection, as determined by the City Engineer.

5) No development will be permitted in any Area of Special Flood Hazard designation as unnumbered A Zone (no base flood elevation established) until a Conditional Letter of Map Revision is approved by FEMA.

6) No development will be permitted in the designated floodway

DATE_____

_____
_____
_____

Mayor
Rusty Johnson

Commissioners
Scott R. Kennedy
District 1

Rosemary Wilsen
District 2

Richard Firstner
District 3

Ages Hart
District 4

City Manager
Robert D. Frank

NOTICE OF AWARD FOR BID
ITB #24-002 W. Oakland Reconstruction

Notice is hereby given that your company was awarded the contract to provide construction services related to ITB #24-002 W. Oakland Ave Reconstruction at the _____, 20 City Commission meeting.

In accordance with the terms of the Invitation to Bid, you must now execute the contract for the work (two copies enclosed). You must also provide the required performance and payment bond on the forms provided in the bid documents, insurance certificate *naming the City as additional insured*, and endorsements. Return all contract documents to my attention within ten (10) business days. The City will date and return a fully executed copy of the contract to you once executed, along with your original copy of the dated bonds. Under the terms of the Invitation to Bid, this Notice of Award shall be rescinded if you do not timely provide the required contract documents.

Effective October 1, 2012, revisions to State of Florida Statute 255.05 will apply to this contract. Once you receive the fully executed contract and dated bonds from the City, you will need to record the performance and payment bonds with Orange County. You are required to provide the City with a <u>certified copy of the recorded bonds</u> before the City can issue the Notice to Proceed or make any payment for the project.

Additionally, please contact Mr. Milen Womack, P.E., City Engineer at (407) 905-3100 ext. 6013 to schedule the pre-construction meeting for this project. The certified copy of the recorded bonds will need to be provided prior to or at the pre-construction meeting. Completion dates will be established at the pre-construction meeting. Work shall begin pursuant to the effective date established by the Notice to Proceed.

The City is looking forward to working with your company on this project.

Sincerely,

Olena Stokych,
Purchasing Analyst

cc: Milen Womack, P.E., City Engineer

NOTICE TO PROCEED

1 N. Bluford Avenue
Ocoee, Florida 34761

DATE:_____

(Contractor)

RE: **NOTICE TO PROCEED ON PROJECT**

Project: **ITB #24-002 W. Oakland Ave Reconstruction**

You are notified that the Contract Time under the above contract will commence to run on _____. On that date, you are to start performing the Work and your other obligations under the Contract Documents. Based on the Contract Time stated in the Contract, we calculate the dates of Substantial Completion and Final Completion to be _____ and _____, respectively.

OWNER: CITY OF OCOEE _____ (Authorized Signature) Steve Krüg, P.E. Public Works Director CITY OF OCOEE	Acknowledge Receipt of Notice CONTRACTOR: By: _____ (Signature) _____ (print or type name) _____ (Title) _____ (Date)

CITY OF OCOEE
1 N. Bluford Avenue
Ocoee, Florida 34761

This Change Order Requires Action by the City Commission

ITB #24-002 W. Oakland Ave Reconstruction
CHANGE ORDER NO. __

DATE: _____ PURCHASE ORDER:_____

The following changes are hereby made to the CONTRACT DOCUMENTS.

Original CONTRACT PRICE	$0.00
Current CONTRACT PRICE ADJUSTED by previous CHANGE ORDERS	$0.00
Net Increase (Decrease) Resulting from this CHANGE ORDER	**$0.00**
The current CONTRACT PRICE including this CHANGE ORDER	**$0.00**
Original CONTRACT COMPLETION DATE:	[original contract date]
Current CONTRACT COMPLETION DATE adjusted by previous CHANGE ORDERS	[current contract date]
Net Increase Resulting from this CHANGE ORDER	**[number] days**
Current CONTRACT COMPLETION DATE including this CHANGE ORDER	**[new contract date]**

CHANGES ORDERED:

I. REQUIRED CHANGES

II. JUSTIFICATION

III. NARRATIVE OF NEGOTIATIONS

IV. PAYMENT

V. APPROVAL AND CHANGE AUTHORIZATION

The original project and funding allocation was established by issuance of a CITY purchase order, subject to the terms and conditions contained in the CITY's solicitation, Project Manual, Drawings, Specifications, and/or the CONTRACTOR's service and price proposal, which collectively form the terms of an agreement between the CITY and the CONTRACTOR for the performance of the Work. This proposed change to the agreement requires approval by the City Commission under the CITY's Purchasing Rules and Regulations and is consistent with any prior action by the City Commission to award the Work to the CONTRACTOR. It is expressly understood and agreed that the approval of the Change Order shall have no effect on the original agreement other than matters expressly provided herein.

CONTRACTOR acknowledges, by its execution and acceptance of this Change Order, that the adjustments in contract price and time shown hereon constitute full and complete compensation and satisfaction for all costs and modifications of performance time incurred by the CONTRACTOR as a result of this Change Order. No other claim for increased costs of performance or modifications of time will be granted by the CITY for the Work covered by this Change Order. The CONTRACTOR hereby waives and releases any further claims for cost or time against the CITY arising from or relating to the matters or Work set forth or contemplated by this Change Order.

[Balance of this page was left blank intentionally]

RECOMMENDED BY:

CITY OF OCOEE, FLORIDA

By: _____
Signature

Date: _____

Title: _____

ACCEPTED BY:

[contractor name]

By: _____
Signature

Date: _____

Title: _____

APPROVED BY:

CITY OF OCOEE, FLORIDA

By: _____
Rusty Johnson, Mayor

Date: _____

Attest: _____
Melanie Sibbitt, City Clerk

FOR USE AND RELIANCE ONLY BY THE CITY OF OCOEE, APPROVED AS TO FORM AND LEGALITY THIS _____ DAY OF _____ , 20___

By: _____
Richard S. Geller, City Attorney

APPROVED BY THE CITY OF OCOEE COMMISSION IN A MEETING HELD ON _____, 20___ UNDER AGENDA ITEM NO. _____.

TABLE 1
Modified Bid Item Quantities & New Bid Items

Item No.	Description	Units	Unit Price	Original Quantity	Revised Quantity	Original Total Price	Revised Total Price	Difference in Price
							Subtotal Changes in Bid Quantities	
							Subtotal New Pay Items	
							Net Change in Contract Price	

CITY OF OCOEE
1 N. Bluford Avenue
Ocoee, Florida 34761

This Change Order can be authorized by the City Manager

ITB #24-002 W. Oakland Ave Reconstruction
CHANGE ORDER NO. __

DATE: _____ PURCHASE ORDER:_____

The following changes are hereby made to the CONTRACT DOCUMENTS.

Original CONTRACT PRICE	$0.00
Current CONTRACT PRICE ADJUSTED by previous CHANGE ORDERS	$0.00
Net Increase (Decrease) Resulting from this CHANGE ORDER	**$0.00**
The current CONTRACT PRICE including this CHANGE ORDER	**$0.00**
Original CONTRACT COMPLETION DATE:	[original contract date]
Current CONTRACT COMPLETION DATE adjusted by previous CHANGE ORDERS	[current contract date]
Net Increase Resulting from this CHANGE ORDER	**[number] days**
Current CONTRACT COMPLETION DATE including this CHANGE ORDER	**[new contract date]**

CHANGES ORDERED:

I. REQUIRED CHANGES

II. JUSTIFICATION

III. NARRATIVE OF NEGOTIATIONS

IV. PAYMENT

V. APPROVAL AND CHANGE AUTHORIZATION

The original project and funding allocation was established by issuance of a CITY purchase order, subject to the terms and conditions contained in the CITY's solicitation, Project Manual, Drawings, Specifications, and/or the CONTRACTOR's service and price proposal, which collectively form the terms of an agreement between the CITY and the CONTRACTOR for the performance of the Work. This proposed change to the agreement requires approval by the City Manager under the CITY's Purchasing Rules and Regulations and is consistent with any action by the City Commission to award the Work to the CONTRACTOR. It is expressly understood and agreed that the approval of the Change Order shall have no effect on the original agreement other than matters expressly provided herein.

CONTRACTOR acknowledges, by its execution and acceptance of this Change Order, that the adjustments in contract price and time shown hereon constitute full and complete compensation and satisfaction for all costs and modifications of performance time incurred by the CONTRACTOR as a result of this Change Order. No other claim for increased costs of performance or modifications of time will be granted by the CITY for the Work covered by this Change Order. The CONTRACTOR hereby waives and releases any further claims for cost or time against the CITY arising from or relating to the matters or Work set forth or contemplated by this Change Order.

[Balance of this page was left blank intentionally]

RECOMMENDED BY:

CITY OF OCOEE, FLORIDA

By: _____
Signature

Date: _____

Title: _____

ACCEPTED BY:

[contractor name]

By: _____
Signature

Date: _____

Title: _____

APPROVED BY:

CITY OF OCOEE, FLORIDA

By: _____
Steve Krüg, P.E. Public Works Director

Date: _____

By: _____
Rebecca Roberts, Director of Finance

Date: _____

By: _____
Robert D. Frank, City Manager

Date: _____

By: _____
Rusty Johnson, Mayor

Date: _____

Attest: _____
Melanie Sibbitt, City Clerk

FOR USE AND RELIANCE ONLY BY THE CITY OF OCOEE, APPROVED AS TO FORM AND LEGALITY THIS _____ DAY OF _____ , 20___

By: _____
Richard S. Geller, City Attorney

APPROVED BY THE CITY OF OCOEE COMMISSION IN A MEETING HELD ON _____, 20___ UNDER AGENDA ITEM NO. _____.

TABLE 1
Modified Bid Item Quantities & New Bid Items

Item No.	Description	Units	Unit Price	Original Quantity	Revised Quantity	Original Total Price	Revised Total Price	Difference in Price
							Subtotal Changes in Bid Quantities	
							Subtotal New Pay Items	
							Net Change in Contract Price	

SECTION 00843
CERTIFICATE OF SUBSTANTIAL COMPLETION

Project: ITB #24-002 W. Oakland Ave Reconstruction

OWNER's Project No. _____
ENGINEER's Project No. _____

CONTRACTOR _____
Contract For _____
Contract Date _____

This Certificate of Substantial Completion applies to all Work under the Contract Documents or to the following specified parts thereof:

To _____
Owner

And To _____
Contractor

The Work to which this Certificate applies has been inspected by authorized representatives of OWNER, CONTRACTOR and ENGINEER, and that Work is hereby declared to be substantially complete in accordance with the Contract Documents on _____, (Date of Substantial Completion).

A tentative list of items to be completed or corrected is attached hereto; Contractor shall provide the cost to complete each item. This list may not be all-inclusive, and the failure to include an item in it does not alter the responsibility of CONTRACTOR to complete all the Work in accordance with the Contract Documents. When this Certificate applies to a specified part of the Work the items in the tentative list shall be completed or corrected by CONTRACTOR within ____ days of the above date of Substantial Completion.

The date of Substantial Completion is the date upon which all guarantees and warranties begin, except as follows:

_____

The responsibilities between OWNER and CONTRACTOR for security, operation, safety, maintenance, heat, utilities and insurance shall be as follows:

RESPONSIBILITIES:

OWNER

_____

_____

_____

_____

_____

CONTRACTOR

_____

_____

_____

_____

_____

The following documents are attached to and made a part of this Certificate:

_____

_____

Executed by ENGINEER on _____, 20

_____
(Engineer)

By _____

The CONTRACTOR accepts this Certificate of Substantial Completion on:

_____, 20____.

_____
(Contractor)

By _____

END OF SECTION

CITY OF OCOEE

1 North Bluford Avenue
Ocoee, Florida 34761

NON-COMPLIANCE NOTICE

NO.: _____

PROJECT DATA:

NAME: ITB #24-002 W. Oakland Ave Reconstruction

LOCATION: _____

OTHER: _____

PROJECT NO.: _____

DATE: _____

REFERENCE.: _____

TO (CONTRACTOR):

_____

_____

_____

Non-compliance Notice was received by Contractor on (date): _____

By: _____

Title: _____

You are hereby notified that the following work or materials does not conform to the requirements of the Contract Documents noted above.

Non-complying work may be required to be removed and replaced at no cost to the Owner.

It shall be your responsibility to determine the corrective action necessary, and to determine whether you wish to discontinue operations until additional investigation by the Owner or Engineer confirm or refute the initial findings.

If you should not correct non-complying work in a timely manner, or continue to perform non-comply work, the Owner may stop the Work. (GC-13.10, SC-13.11).

DESCRIPTION (of non-conforming work or materials): _____

_____

_____

_____

_____

_____

ISSUED BY: _____ TITLE: _____

ATTACHMENTS (Listing of attached documents that support description):

1. Contractor Request for Information No._____
2. _____
3. _____
4. _____
5. _____
6. _____

☐ OWNER: _____ ☐ CONTRACTOR: _____

☐ ENGINEER: _____ ☐ FIELD: _____

☐ SUBCONSULTANT: _____ ☐ OTHER: _____

CITY OF OCOEE
1 North Bluford Avenue
Ocoee, Florida 34761

FIELD ORDER & DIRECTIVE

NO.: _____

PROJECT DATA:

NAME: ITB #24-002 W. Oakland Ave Reconstruction

LOCATION: _____

OTHER: _____

PROJECT NO.: _____

DATE: _____

REFERENCE: _____

TO (CONTRACTOR):

_____

_____

_____

Field Order was received on (date): _____

By: _____

Title: _____

You are hereby directed to execute promptly this Field Order which interprets the Contract Documents or orders minor changes in the Work without change in Contract Sum or Contract Time.

If you consider that a change in Contract Sum or Contract Time is required, please submit your itemized proposal to the Engineer immediately and before proceeding with this Work. If your proposal is found to be satisfactory and in proper order, this Field Order will in that event be superseded by a Change Order.

DESCRIPTION (of interpretation or change): _____

_____

_____

_____

_____

_____

ISSUED BY: _____ TITLE: _____

ATTACHMENTS (Listing of attached documents that support description):

1. Contractor Request for Information No._____
2. _____
3. _____
4. _____
5. _____
6. _____

☐ OWNER: _____
☐ ENGINEER: _____
☐ SUBCONSULTANT: _____
☐ CONTRACTOR: _____
☐ FIELD: _____
☐ OTHER: _____

SECTION 00846

SCHEDULE OF VALUES

Pay Estimate No. ____________________ Project ____
For Period Ending ___________________ Prepared by ______________________________ Page ____ of ____

A	B	C	D	E	F	G		H		I
Item	Description	Bid Quantity	Units	Unit Price	Bid Amount	Complete Through Last Period		Complete Through This Period		Value of Items Completed
						Qty.	%	Qty.	%	
							Subtotals			

CITY OF OCOEE
1 North Bluford Avenue
Ocoee, Florida 34761

REQUEST FOR PROPOSED CHANGE

RFP NO. _____

SECTION A: City shall complete to request proposal from Contractor

PROJECT DATA:

NAME: ITB #24-002 W. Oakland Ave Reconstruction
PROJECT NO:_____

LOCATION: _____

DATE: _____

OTHER: _____

REFERENCE:_____

TO (CONTRACTOR): _____

Please provide the undersigned a proposal for the following change in the work within seven (7) calendar days after receipt of this request. The written proposal must clearly delineate the scope of the proposed change in the work providing an itemized estimate of the time and all material and labor (by trade), subcontract and overhead costs and fees. Any amount claimed for subcontracts must be similarly supported.

DESCRIPTION of change in work: _____

Change Order Type: ☐ Deletion ☐ Addition ☐ Revision ☐ Other: ( )

Constraints of Change: _____

Initiated by: ☐ Changes in Owner Requirements ☐ Unforeseen Conditions ☐ Others: ( )

Proposal must be received by: _____

ATTACHMENTS (Listing of attached documents that support description):

1. Contractor Request for Information No. _____
2. Plan Revisions: _____
3. _____
4. _____
5. _____
6. _____

☐ OWNER: _____
☐ ENGINEER: _____
☐ CONSTRUCTION ADMINISTRATOR:_____
☐ SUBCONSULTANT: _____
☐ CONTRACTOR: _____
☐ FIELD: _____
☐ OTHER: _____

Date Received From Contractor: _____

Date Returned to Contractor With Comments: _____

Date Returned to City: _____

Section B: To be completed by City after receipt of Proposal from Contractor

PRICING INFORMATION:

Method of Pricing:

A. ☐ Established Contract Unit Price(s)

B. ☐ Negotiated Unit Price(s) (including Overhead and Profit)

C. ☐ Negotiated Lump Sum (including Overhead and Profit)

D. ☐ Actual Cost of Work plus Fixed Percent for Overhead and Profit

E. ☐ A combination of A, B, C, D

DESCRIPTION OF WORK:

☐ By General Contractor ☐ By Subcontractor

ITEM OF WORK	QUANTITY	PRICE	TOTAL

Attach additional pages if necessary.

NET TOTAL COST OF THIS CHANGE PROPOSAL **$**_____

EXTENSION OF CONTRACT TIME:

As part of this Change Proposal the Contractor requests an extension of the contract time in the amount of _____ additional days.

Provide thorough documentation in support of the request for additional time: _____

A requirement of this Change Proposal will be to provide record drawing information for all of the affected items of work

RECOMMENDATION BY ENGINEER/CONSTRUCTION ADMINISTRATOR:

Comments: _____

Signature of Engineer/Construction Administrator: _____ Date: _____

ACCEPTANCE BY OWNER:

Comments: _____

Signature: _____ Date: _____

I, _____ (Name), of _____ (Company) agree to the costs and terms of ITB _____ (No.)

this _____ (day) day of _____ (month), 20 _____ (year)

CITY OF OCOEE 1 North Bluford Avenue Ocoee, Florida 34761	DAILY CONSTRUCTION REPORT Day _____of_____

PROJECT DATA:

NAME: _____ PROJECT NO.: _____

LOCATION: _____ DATE: _____

OTHER: _____ REFERENCE: _____

1. TIME (24 HR. CLOCK)

Work Started: _____

Work Stopped: _____

TEMP. RANGE

AM: _____

PM: _____

PRECIPITATION

Type: _____

Duration: _____

WEATHER

☐ Sunny ☐ Overcast

☐ Cloudy ☐ Windy

GROUND CONDITIONS

☐ Dry ☐ Saturated

☐ Wet ☐ Frozen

2. RECORD OF LABOR

CONTRACTOR	TYPE	NO.	HRS.	CONTRACTOR	TYPE	NO.	HRS.

3. EQUIPMENT

CONTRACTOR	TYPE	MODEL	HRS.	USE

4. MATERIAL RECEIVED

RECEIVED BY	TYPE	QUANTITY	SUPPLIER	USE

☐ OWNER: _____ ☐ CONTRACTOR: _____

☐ ENGINEER: _____ ☐ FIELD: _____

☐ SUBCONSULTANT: _____ ☐ OTHER: _____

5. DESCRIPTION OF WORK PERFORMED:

6. DELAYS TO WORK:

7. DISCUSSIONS AND/OR INSTRUCTIONS:

NAME	SUBJECT	R.F.I. #	FIELD ORDER #

8. VISITORS TO SITE:

NAME	TITLE	REPRESENTING	DISCUSSION

9. TEST RECORD:

TYPE	NO.	PERFORMED BY	RESULTS

ATTACH ADDITIONAL SHEET IF NECESSARY TO CLARIFY REPORT

Submitted By: _____

Date: / / _____

SECTION 00861
APPLICATION AND CERTIFICATE FOR PAYMENT FORM

Application No.____ _____Progress Payment _____Final Payment P.O. No.: _____

Contractor: _____ Contract Date: _____

Application Date:_____ For Period Ending_____

City Project Nos.: _____

Project Name: _____

Construction Start Date: _____ End Date: _____

Construction Days – Total: _____ Elapsed: _____ Remaining: _____

1. Original Contract Amount $_____
2. Sum of Approved Change Orders to Date (from Table) $_____
3. Current Contract Amount (Sum of Lines 1 and 2) $_____
4. Total of Prior Pay Applications (including retainage) $_____
5. Amount of this Pay Application (including retainage; from Bid Item Quantity Spreadsheet) $_____
6. Total Earned to Date (Sum of Lines 4 and 5) $_____
7. Total of Payments Made by City to Date $_____
8. Retainage Held from Prior Pay Applications $_____
9. Retainage to Be Held in this Pay Application $_____
10. Total Retainage Held to Date (Sum of Lines 8 and 9) $_____
11. Total Earned to Date less Retainage (Line 6 minus Line 10) $_____
12. Total Earned less Retainage for this Pay Application (Line 5 minus Line 9) $_____
13. Total Amount to Be Paid by City for this Application (Line 11 minus Line 7) $_____

Approved Change Orders

Change Order No.	Date Approved by City	Date Accepted by Contractor	Total Change in Contract Price
		Total (Write in Line 2, above)	

Contractor's Certification

The undersigned Contractor hereby swears under penalty of perjury that (1) all previous progress payments received from the Owner on account of Work performed under the contract referred to above have been applied by the undersigned to discharge in full all obligations of the undersigned incurred in connection with Work covered by prior Applications for Payment numbered 1 through _____ inclusive (not applicable for first application.); and (2) all materials and equipment incorporated in said Project or otherwise listed in or covered by this Application for Payment are free and clear of all liens, claims, security interest and encumbrances; (3) all Work covered by this Application for Payment is in accordance with the Contract Documents and not defective as that term is defined in the Contract Documents.

Dated _____, 20__

_____
(Contractor)

By:_____
(Name)

_____
(Title)

COUNTY OF_____

STATE OF_____

Before me on this _____ day of _____, 20__, personally appeared _____, known to me, who being duly sworn, deposes and says that (s)he is the _____ of the Contractor above mentioned; that(s) he executed the above Application for Payment and statement on behalf of said Contractor; and that all of the statements contained therein are true, correct and complete. By means of ☐ physical presence or ☐ online notarization.

_____
Notary Public
My Commission Expires_____

Payment shown on Line 13 is recommended by City's Resident Project Representative and authorized by the Owner:

By:_____ Date: _____
Representative's Authorized Signature

By:_____ Date: _____
Owner's Authorized Signature

_____
Title

CONTRACTOR'S FINAL RELEASE OF LIEN

Before me the undersigned authority in said County and State, appeared _____ who, being first duly sworn, deposes and says that he is _____ of _____, a company and/or corporation authorized to do business under the laws of Florida, which is the Contractor on the Contract described as: _____ dated the _____ day of _____, 20_____, that the said deponent is duly authorized to make this affidavit by resolution of the Board of Directors of said company and/or corporation; that deponent knows of his own knowledge that said Contract has been complied with in every particular by said Contractor and that all parts of the work have been approved by the Owner's Engineers; that there are no bills remaining unpaid for labor, material, or otherwise, in connection with said Contract and work, and that there are no suits pending against the undersigned as Contractor or anyone in connection with the work done and materials furnished or otherwise under said Contract. Deponent further says that the final estimate which has been submitted to the owner simultaneously with the making of the affidavit constitutes all claims and demands against the Owner on account of said Contract or otherwise, and the acceptance of the sum specified in said final estimate will operate as a full and final release and discharge of the Owner from any further claims, demands or compensation by Contractor under the above Contract. Deponent further agrees that all guarantees under this Contract shall be in full force from the date of this release as spelled out in the Contract Documents.

Sworn to and subscribed to before me this _____ day of _____, 20_____.

_____
Notary Public

My Commission Expires_____

We, the _____ having heretofore executed a Performance Bond for the above-mentioned Contractor covered Project and Section as described above in the sum of_____dollars ($_____), hereby agree that the Owner may make full payment of the final estimate, including the retained percentage, to said Contractor.

It is fully understood that the granting of the right to the Owner to make payment of the final estimate to said Contractor and/or his assigns, shall in no way relieve the surety company of its obligations under its bond, as set forth in the Specifications, Contract and Bond pertaining to the above Project.

IN WITNESS WHEREOF, the _____ has caused this instrument to be executed on its behalf by its _____ and/or its duly authorized attorney in fact, and its corporate seal to be hereunto affixed, all of this _____ day of _____, A.D., 20_____.

_____
Surety Company

_____
Attorney in Fact

(Power of Attorney must be attached if executed by Attorney in Fact)

STATE OF FLORIDA

COUNTY OF _____

Before me the undersigned authority, personally appeared to me well known as the person described in and who executed the foregoing instrument in the name of _____ and/or _____ purpose therein expressed and that he had due and legal authority to execute the same on behalf of said _____, a corporation. By means of ☐ physical presence or ☐ online notarization,

IN WITNESS WHEREOF, I have hereunto set my hand and official seal at _____ this _____ day of _____, 20_____.

_____
Notary Public

END OF SECTION

SHOP DRAWING SUBMITTAL

Owner: City of Ocoee

Specification No.: _____

Project: _____

Contractor: _____

FOR CITY USE ONLY
DATE RECEIVED _____
DATE RETURNED _____

Owner's Project No.: _____

Contractor's Submittal No.: _____

Contractor's Project No.: _____

Resubmittal Yes _____ No _____

ITEM NO	RESUBMITTAL NO.	NO. COPIES	VENDOR	DESCRIPTION	ENGINEER'S ACTION

ACTION CODE (As defined in the General Conditions)

A	APPROVED
AN	APPROVED AS NOTED
AN/R	APPROVED AS NOTED NOTED, RESUBMIT SPECIFIED ITEMS
NA/R	NOT APPROVED/REVISE AND RESUBMIT (DO NOT ORDER OR FABRICATE UNTIL APPROVED)

SUBMITTED BY:_____
Contractor

DATE:_____

ENGINEERS COMMENTS:

_____

_____

_____

Distribution

- Contractor ___ Copies
- Owner ___ Copies
- ML Office ___ Copies
- ML Subconsultant ___ Copies
- ML Field ___ Copies

Discipline Review:

_____
Reviewed By Date

Discipline Review:

_____
Reviewed By Date

_____
Project Manager Date

END OF SECTION

CERTIFICATE OF FINAL INSPECTION

Agreement Title: _____

City Contract No.: _____

TO: CONTRACTOR: _____

Project Manager: _____

A joint inspection of the Work described in the Contract Documents has been made by the Owner, the Owner's Engineer and the Contractor on _____ (date) in accordance with Section 1.14.A of the General Requirements, and is accepted by the Owner, subject to the provisions of subsection 1.14.B.4 of the General Requirements for a Corrective Period subject to the provisions of Article 13.07 of the General Conditions or as otherwise agreed upon and attached.

Accepted by:

CONTRACTOR

By: _____ Date: _____

ENGINEER

By: _____ Date: _____

Approved:

OWNER: _____ Date: _____

_____ Date: _____

CITY OF OCOEE
1 North Bluford Avenue
Ocoee, Florida 34761

CONTRACTOR'S REQUEST FOR INFORMATION

No.: _____

PROJECT DATA:

NAME:: ITB #24-002 W. Oakland Ave Reconstruction

LOCATION: _____

OTHER: _____

PROJECT NO.: _____

DATE: _____

REFERENCE: _____

QUESTION:

_____

BY: _____ DATE: _____

REPLY:

_____

BY: _____ DATE: _____

☐ OWNER: _____

☐ ENGINEER: _____

☐ SUBCONSULTANTT: _____

☐ CONTRACTOR: _____

☐ FIELD: _____

☐ OTHER: _____

This Instrument Prepared By:
Name _____
Address _____

WAIVER AND RELEASE OF LIEN
UPON FINAL PAYMENT

The undersigned lienor, in consideration of the final payment in the amount of $_____ _____, hereby waives and releases its lien and right to claim a lien for labor, services or materials furnished through _____, 20 ____, to _____ (customer) on the job of _____ (owner of property) to the following described property:

WITNESS my hand and seal this _____ day of _____, 20 ____.

Lienor's Name _____
Address _____

By _____
Printed Name _____

Sworn to and subscribed before me by _____ who is personally known to me or produced _____ as identification, and who did ___ take an oath, this _____ day of _____, 20 ____. By means of ☐ physical presence or ☐ online notarization.

Signature of Notary _____ SEAL:
Printed Name of Notary _____
Commission No./Expiration _____

This Instrument Prepared By:
Name _____
Address _____

WAIVER AND RELEASE OF LIEN
UPON PROGRESS PAYMENT

The undersigned lienor, in consideration of the sum of $ _____, hereby waives and releases its lien and right to claim a lien for labor, services or materials furnished through _____, 20 ____, to _____ (customer) on the job of _____ (owner of property) to the following described property:

This waiver and release does not cover any retention or labor, services, or materials furnished after the date specified.

WITNESS my hand and seal this _____ day of _____, 20 ____.

Lienor's Name _____
Address _____

By _____
Printed Name _____

Sworn to and subscribed before me by _____ who is personally known to me or produced _____ as identification, and who did ___ take an oath, this _____ day of _____, 20 ____. By means of ☐ physical presence or ☐ online notarization.

Signature of Notary _____ SEAL:
Printed Name of Notary _____
Commission No./Expiration _____

CONTRACTOR'S FINAL AFFIDAVIT

STATE OF FLORIDA,
COUNTY OF_____.

BEFORE ME, the undersigned authority, duly authorized to administer oaths and take acknowledgments, personally appeared _____ who being duly sworn, deposes and says:

1. He is the _____(title) of _____(name of business) hereinafter referred to as "Contractor."

2. At all times material hereto, Contractor has been doing business in _____ County, Florida.

3. This Affidavit is made pursuant to Section 713.06(3)(d)(1), Florida Statutes, for the purpose of acknowledging full and final payment to the Contractor for work done and materials supplied on real property described as: (property description)

4. That all lienors engaged by the Contractor to perform or provide labor, services and/or materials under the contract between Contractor and the owner of the above-described property have been paid in full, except as follows:

Name/Address _____
Amount Due _____

Name/Address _____
Amount Due _____

FURTHER AFFIANT SAYETH NOT.

_____
(Signature of Contractor)

Sworn to and subscribed before me by _____ who is personally known to me or produced _____ as identification, and who did _____ take an oath, this _____ day of _____, 20 ____. By means of ☐ physical presence or ☐ online notarization.

Signature of Notary _____
Printed Name of Notary _____
Commission No./Expiration _____
SEAL:

CONTRACTOR'S INTERIM AFFIDAVIT

STATE OF FLORIDA,
COUNTY OF_____.

BEFORE ME, the undersigned authority, duly authorized to administer oaths and take acknowledgments, personally appeared _____ who being duly sworn, deposes and says:

1. He is the _____(title) of _____(name of business) hereinafter referred to as "Contractor."

2. At all times material hereto, Contractor has been doing business in _____ County, Florida.

3. This Affidavit is made pursuant to Section 713.06(3)(c)(1), Florida Statutes, for the purpose of acknowledging full payment to the Contractor for work done and materials supplied through _____, 20 ____, on real property described as: (property description)

4. That all lienors engaged by the Contractor to perform or provide labor, services and/or materials under the contract between Contractor and the owner of the above-described property have been paid in full for all work done or materials supplied through _____, 20 ____, except as follows:

Name/Address _____
Amount Due _____

Name/Address _____
Amount Due _____

FURTHER AFFIANT SAYETH NOT.

_____
(Signature of Contractor)

Sworn to and subscribed before me by _____ who is personally known to me or produced _____ as identification, and who did ___ take an oath, this _____ day of _____, 20 ____.

Signature of Notary _____ SEAL:
Printed Name of Notary _____
Commission No./Expiration _____

TABLE OF CONTENTS

PURPOSE OF THIS DOCUMENT. . . . . DWG. 22.08-101B
DEFINITIONS. . . . . DWG. 22.08-101B
CUSTOMER RESPONSIBILITIES. . . . . DWG. 22.08-101C
DUKE ENERGY RESPONSIBILITIES. . . . . DWG. 22.08-101C
TRENCH REQUIREMENTS. . . . . DWG. 22.08-101C
MATERIAL REQUIREMENTS. . . . . DWG. 22.08-101E
CONDUIT AND FITTING INSTALLATION. . . . . DWG. 22.08-101E
CONDUIT POSITIONING IN TRANSFORMERS. . . . . DWG. 22.08-101F
CONDUIT POSITIONING IN PEDESTALS. . . . . DWG. 22.08-101I
CONDUIT POSITIONING IN SWITCHGEAR. . . . . DWG. 22.08-101J
CONDUIT POSITIONING AT RISERS (POLE AND PREMISE). . . . . DWG. 22.08-101K
CONDUIT POSITIONING IN PULLBOXES. . . . . DWG. 22.08-101L
CLEARANCES. . . . . DWG. 22.08-101N

PURPOSE OF THIS DOCUMENT

THIS DOCUMENT PROVIDES INFORMATION AND REQUIREMENTS A CUSTOMER WILL NEED TO PROPERLY INSTALL CONDUIT IN BOTH RESIDENTIAL AND COMMERCIAL APPLICATIONS.

DEFINITIONS

SERVICE: 600-VOLT RATED UNDERGROUND CONDUCTORS BETWEEN THE UTILITY ELECTRIC SYSTEM AND THE CUSTOMERS ELECTRIC SYSTEM.

SERVICE POINT (POINT OF DELIVERY): THE POINT OF CONNECTION BETWEEN THE FACILITIES OF THE SERVING UTILITY AND THE PREMISE WIRING.

SECONDARY: 600-VOLT RATED CONDUCTOR BETWEEN PAD-MOUNTED TRANSFORMERS AND SECONDARY PEDESTALS OR BETWEEN SECONDARY PEDESTALS.

SECONDARY PEDESTAL (ALSO LISTED AS "PEDESTAL" IN THIS DOCUMENT): ABOVE-GROUND ENCLOSURE THAT ACTS AS A JUNCTION POINT FOR SECONDARY CONDUCTORS OR SECONDARY CONDUCTORS AND SERVICES.

PULL BOX: FLUSH-MOUNTED ENCLOSURE THAT ACTS AS A JUNCTION POINT FOR SECONDARY OR PRIMARY CONDUCTORS.

PAD-MOUNTED TRANSFORMER (ALSO LISTED AS "TRANSFORMER" IN THIS DOCUMENT): PAD-MOUNTED ABOVE-GROUND STYLE TRANSFORMER MOUNTED IN A STEEL ENCLOSURE FOR CONVERTING MEDIUM VOLTAGE TO SERVICE/SECONDARY VOLTAGE LEVELS.

GROUND ROD: GROUNDING ELECTRODE FOR USE AS A DIRECT CONNECTION TO EARTH.

MINIMUM COVER: THE MINIMUM ALLOWABLE DISTANCE BETWEEN THE TOP OF A BURIED CONDUIT TO FINAL GRADE.

SWITCHGEAR: AN ABOVE-GROUND PAD-MOUNTED STEEL ENCLOSURE CONTAINING MEDIUM VOLTAGE SWITCHING EQUIPMENT.

RISER OR RISER POLE: THE POINT OF CONNECTION BETWEEN THE UTILITY OVERHEAD POWER SYSTEM AND AN UNDERGROUND SYSTEM.

THREE-PHASE (REFERENCE FOR PRIMARY VOLTAGE IN THIS DOCUMENT): A MULTI-PHASE SYSTEM CONSISTING OF THREE SEPARATE PHASE CONDUCTORS IN A BUNDLED OR TRIPLEXED CONFIGURATION.

SINGLE-PHASE (REFERENCE FOR PRIMARY VOLTAGE IN THIS DOCUMENT): A PRIMARY VOLTAGE SYSTEM CONSISTING OF ONE CONDUCTOR.

LIGHTING CABLE: 600-VOLT RATED CONDUCTORS SERVING A STREET LIGHT.

CABLE ENTRANCE ZONES: AREAS DEFINED WITHIN A PROPOSED TRANSFORMER, SWITCHGEAR, AND PEDESTAL FOR USE IN STUBBING UP ELECTRICAL CONDUITS.

PRIMARY: MEDIUM VOLTAGE CABLE TYPICALLY NOT EXCEEDING 1/0 AWG IN SIZE (TYPICALLY 7.2 KV TO 14.4 KV PHASE TO GROUND). CAN BE SINGLE-PHASE OR THREE-PHASE.

FEEDER: MEDIUM VOLTAGE CABLE GREATER THAN 1/0 AWG IN SIZE (TYPICALLY 7.2 KV TO 14.4 KV PHASE TO GROUND), THREE-PHASE ONLY.

LOOP: REFERS TO A CIRCUIT THAT CAN BE FED FROM REDUNDANT (2) SOURCES. IT IS CRITICAL FOR EACH CABLE ON THE SAME LOOP TO BE SEPARATED WITHIN A TRENCH.

MANDREL: CYLINDRICAL OBJECT PULLED THROUGH A CONDUIT SYSTEM TO VERIFY THE INTEGRITY OF THE SYSTEM AND THAT CABLE CAN BE SUCCESSFULLY PULLED THROUGH THE SYSTEM.

CUSTOMER RESPONSIBILITIES

- PROVIDE ALL MATERIAL RELATED TO THE CONDUIT SYSTEM AND THE LABOR TO INSTALL THIS MATERIAL.
- COMPLY WITH ALL REQUIREMENTS LISTED IN THIS DOCUMENT.
- CORRECT ALL INSTANCES OF NON-COMPLIANCE WITH THE REQUIREMENTS LISTED IN THIS DOCUMENT.
- CUSTOMER IS RESPONSIBLE FOR INSTALLING CONDUIT AND CABLE UP TO THE POINT OF DELIVERY AS DEFINED IN THE SERVICE REQUIREMENTS MANUAL.

DUKE ENERGY RESPONSIBILITIES

- PROVIDE ALL CABLE AND ASSOCIATED MATERIALS ALONG WITH THE LABOR TO INSTALL THESE MATERIALS UP TO THE POINT OF DELIVERY.
- COORDINATE WITH THE CUSTOMER TO DETERMINE THE BEST METHOD OF MARKING THE ROUTE OF ALL APPLICABLE PRIMARY AND SECONDARY CABLE, AND THE LOCATION OF ALL EQUIPMENT (TRANSFORMERS, SWITCHGEAR, ETC.), PEDESTALS, PULL BOXES, RISERS AND STREET LIGHT POLES. EQUIPMENT WILL NORMALLY BE PLACED DIRECTLY ON TOP OF THE CABLE ROUTE TO REDUCE THE NUMBER OF 90-DEGREE BENDS.
- SPECIFY THE NUMBER OF CONDUITS THAT WILL BE INSTALLED IN EACH PAD-MOUNTED TRANSFORMER AND PEDESTAL.
- INSPECT THE CONDUIT SYSTEM PRIOR TO THE INSTALLATION OF CABLE.
- DUKE ENERGY RESERVES THE RIGHT TO REFUSE ACCEPTANCE OF ANY PORTION OF A CONDUIT SYSTEM THAT DOES NOT MEET ALL THE REQUIREMENTS LISTED IN THIS DOCUMENT. IT WILL BE THE CUSTOMER'S RESPONSIBILITY TO CORRECT ALL INSTANCES OF NON-COMPLIANCE.

TRENCH REQUIREMENTS

- THE UNDERGROUND TRENCH CONTAINING THE ELECTRIC CABLES IS FOR THE SOLE USE OF DUKE ENERGY. NO OTHER UTILITIES MAY BE ALLOWED IN THE TRENCH WITHOUT THE EXPRESS PERMISSION OF DUKE ENERGY.
- THE BOTTOM OF THE TRENCH MUST BE SMOOTH AND FREE OF ROCKS, ROOTS, CONSTRUCTION DEBRIS OR ANY OTHER HARD OR SHARP OBJECT. IF NECESSARY, INSTALL A FEW INCHES OF CLEAN BACKFILL TO COVER ANY OF THESE ITEMS THAT CANNOT BE REMOVED.
- ALL CONDUIT MUST BE INSTALLED AT THE PROPER DEPTH AND WITH PROPER SEPARATION AS SHOWN ON THE TABLES ON DWG. 28.08-101D.
- THE MAXIMUM TRENCH DEPTH MUST NOT EXCEED FOUR (4) FEET, EXCEPT WHERE REQUIRED AT ENTRANCE POINTS FOR CONDUIT BENDS INTO PIT PADS OR PULLBOXES.
- ALL BACKFILL MUST BE FREE OF ROCKS, CONSTRUCTION DEBRIS, OR ANY OTHER HARD OBJECTS.
- ALL BACKFILL MUST BE COMPACTED TO THE FIRMNESS OF UNDISTURBED SOIL.
- THE CUSTOMER WILL BE RESPONSIBLE FOR ANY SETTLING OR WASHOUT OF THE TRENCH.

REVISED		BY	CHK'D	APPR.
3				
2				
1	10/17/19	DANNA	EANES	ADCOCK
0	10/4/19	FLETCHER	EANES	ADCOCK

CUSTOMER GUIDE FOR INSTALLING CONDUIT

DEC	DEM	DEP	DEF
			X

22.08-101C

ALL CONDUIT MUST BE INSTALLED AT THE PROPER DEPTH AND WITH PROPER SEPARATION AS SHOWN BELOW.

TABLE 1: MINIMUM CONDUIT COVER		
CABLE OR APPLICATION	MINIMUM COVER (X)	SPECIFIC NOTES
SECONDARY / SERVICE	30"	SEE NOTE 2
PRIMARY (1Ø OR 3Ø)	36"	SEE NOTE 2
ROAD CROSSINGS (ANY VOLTAGE)	36"	-
PARKING LOT CROSSINGS (ANY VOLTAGE)	36"	SEE NOTE 2

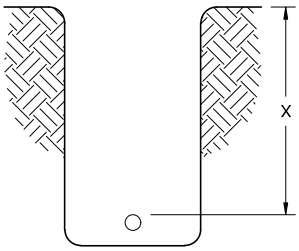

TABLE 2: REQUIRED MINIMUM HORIZONTAL SEPARATION BETWEEN CONDUITS.					
COLUMN 1	MINIMUM HORIZONTAL SEPARATION FROM CABLES IN COLUMN 1 (X)				
CABLE	SECONDARY/ SERVICE	PRIMARY, 200A (1Ø OR 3Ø)	PRIMARY, 200A (1Ø OR 3Ø) WHEN BOTH CABLES **ARE NOT** PART OF THE SAME LOOP	PRIMARY, 200A (1Ø OR 3Ø) WHEN BOTH CABLES **ARE** PART OF THE SAME LOOP	FEEDER (>200A)
SECONDARY / SERVICE	NO REQUIRED SEPARATION SEE FIGURE 1	NO REQUIRED SEPARATION SEE FIGURE 1			36" SEE FIGURE 3
PRIMARY, 200A (1Ø OR 3Ø)	NO REQUIRED SEPARATION SEE FIGURE 1		NO REQUIRED SEPARATION SEE FIGURE 1	36" SEE FIGURE 2	36" SEE FIGURE 3
FEEDER (>200A)	36" SEE FIGURE 3	36" SEE FIGURE 3			36" SEE FIGURE 3

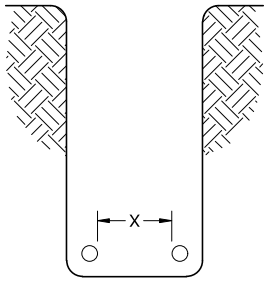

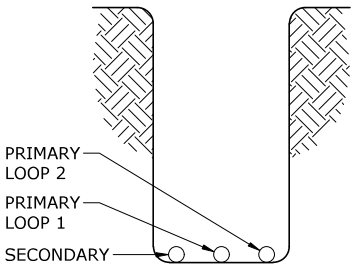

FIGURE 1
NO SEPARATION BETWEEN CONDUITS

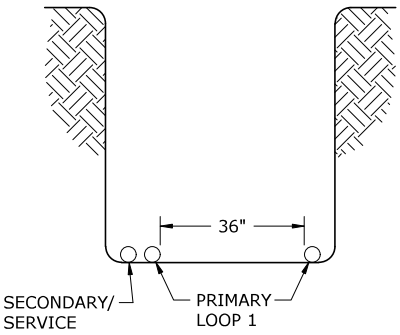

FIGURE 2
36" SPACING BETWEEN CONDUITS OF SAME PRIMARY LOOP

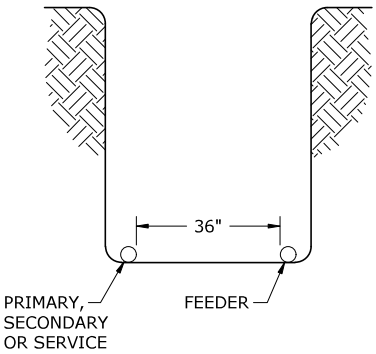

FIGURE 3
36" SPACING BETWEEN FEEDER CONDUITS AND THOSE CONTAINING ANY OTHER TYPE OF CABLE

NOTES:

1. DISTANCES ARE MEASURED TO THE SURFACE OF THE CABLE OR CONDUIT.
2. PRIMARY CABLES LESS THAN 30" DEEP OR SECONDARY CABLES LESS THAN 24" DEEP MUST BE INSTALLED IN MINIMUM SCHEDULE 40 CONDUIT WITH A MINIMUM OF TWO (2) INCHES OF CONCRETE ABOVE AND BESIDE THE CONDUIT AND A MINIMUM OF SIX (6) INCHES OF COVER.
3. FEEDER (>200A) CONDUITS MUST BE SEPARATED HORIZONTALLY FROM CONDUITS CONTAINING ANY OTHER TYPE OF CABLE BY 36".
4. EITHER ONE WIDE TRENCH OR TWO NARROW TRENCHES MAY BE USED, BASED ON ECONOMICS, TO OBTAIN REQUIRED HORIZONTAL SEPARATION.

DUKE ENERGY.

REVISED		BY	CHK'D	APPR.
3				
2				
1				
0	10/4/19	FLETCHER	EANES	ADCOCK

CUSTOMER GUIDE FOR INSTALLING CONDUIT

DEC	DEM	DEP	DEF
			X

22.08-101D

MATERIAL REQUIREMENTS

- CONDUIT AND CONDUIT FITTINGS MUST BE PVC SCHEDULE 40 OR GREATER, RATED FOR USE WITH 90° C ELECTRICAL CABLE, UL LISTED AND GRAY IN COLOR. NO WATER, SEWER, GAS OR TELECOMMUNICATION PIPE MAY BE USED. EACH LENGTH OF CONDUIT AND EACH BEND MUST HAVE AN INTEGRAL BELL ON ONE END. THE CONDUIT MANUFACTURER'S NAME, CONDUIT SIZE, TYPE AND DATE CODE MUST BE PRINTED ON THE SURFACE OF THE CONDUIT.

  CONDUIT SIZE WILL BE AS FOLLOWS.

APPLICATION	CONDUIT SIZE
SINGLE-PHASE PRIMARY	3"
THREE-PHASE PRIMARY (1/0 AWG)	4"
THREE-PHASE PRIMARY (GREATER THAN 1/0 AWG)	6"
600V SECONDARY (TX TO PEDESTAL)	3"
600V SERVICES (RESIDENTIAL)	2-1/2"
LIGHTING CABLE	1-1/2"

- ALL COUPLINGS MUST HAVE A CENTER STOP.
- ALL 6" BENDS MUST HAVE A 48" MINIMUM RADIUS AND ALL OTHER BENDS MUST HAVE A 36" MINIMUM RADIUS. ALL BENDS MUST HAVE AN INTEGRAL BELL ON ONE END.
- PULL STRINGS MUST BE MADE OF A MATERIAL THAT WILL NOT ROT, (I.E., NYLON).

CONDUIT AND FITTING INSTALLATION

- EXAMINE ALL CONDUIT AND CONDUIT ACCESSORIES BEFORE THEY ARE INSTALLED FOR SHARP EDGES, OUT-OF-ROUND SHAPE, CRACKS, CHIPS, BURRS, AND INSIDE PROTRUSIONS THAT WOULD DAMAGE THE CABLE WHEN IT IS PULLED INTO POSITION. SUCH PIECES SHALL NOT BE INSTALLED.
- THE MATING SURFACES OF ALL SECTIONS OF CONDUIT AND ALL FITTINGS MUST BE PROPERLY CLEANED, FULLY SEATED AND CEMENTED TOGETHER. APPLY A UNIFORM COATING OF CEMENT OVER THE ENTIRE OUTER SURFACE OF THE CONDUIT END AND THE INSIDE OF THE INTEGRAL BELL OR FITTING.
- REMOVE ANY SHARP EDGES THAT ARE CREATED ON THE INSIDE OR OUTSIDE OF CONDUIT WHEN IT IS CUT.
- CONDUIT MUST LIE FLAT ON THE BOTTOM OF THE TRENCH.
- A CONTINUOUS PULL STRING, WITH NO KNOTS OR SPLICES, MUST BE PROVIDED THROUGHOUT THE LENGTH OF EACH INDIVIDUAL CONDUIT SEGMENT. FOR EXAMPLE, A SINGLE PULL STRING MUST EXTEND FROM A TRANSFORMER, PASS THROUGH ALL BENDS AND CONDUIT PIECES, AND THEN EXIT AT A PEDESTAL.
- CUSTOMER SHALL PULL A SOLID MANDREL, NO MORE THAN 1/2 INCH SMALLER THAN THE INSIDE DIAMETER OF THE CONDUIT, THROUGH ALL CONDUIT SEGMENTS TO VERIFY THEY ARE IN GOOD CONDITION AND FREE OF OBSTACLES.
- CONDUITS MUST BE CAPPED TO PREVENT DEBRIS, RAIN, ETC. FROM ENTERING THE CONDUIT. TAPE OR RAGS ARE NOT SUFFICIENT. THESE CAPS MUST **NOT** BE CEMENTED ONTO THE CONDUIT OR FITTING.
- PLACE TWO, FORTY (40) POUND BAGS OF CONCRETE AGAINST EACH 90° BEND CONTAINING SECONDARY/ SERVICE CABLE AND THREE, FORTY (40) POUND BAGS AGAINST BENDS CONTAINING PRIMARY CABLE TO PREVENT MOVEMENT DURING CABLE PULLING. DO NOT OPEN THE BAGS, JUST PLACE THEM AGAINST THE BEND.
- IT IS NOT NECESSARY TO DOUBLE THE REQUIRED NUMBER OF CONCRETE BAGS WHEN TWO BENDS ARE INSTALLED SIDE-BY-SIDE. USE THE NUMBER OF BAGS REQUIRED FOR A SINGLE BEND AND POSITION THE BAGS SO THEY WILL COVER BOTH BENDS.
- BAGS OF CONCRETE ARE NOT REQUIRED ON 90 DEGREE BENDS WHERE THE TOTAL LENGTH OF THE CONDUIT SECTION IS 100 FT. OR LESS.

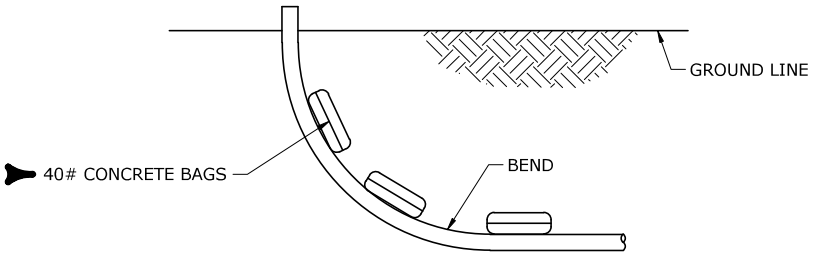

SECURING BENDS WITH BAGS OF CONCRETE

REVISED	BY	CHK'D	APPR.
3			
2 10/1/21	FLETCHER	EANES	GRAHAM
1 9/11/20	DANNA	EANES	GRAHAM
0 10/4/19	FLETCHER	EANES	ADCOCK

CUSTOMER GUIDE FOR INSTALLING CONDUIT

DUKE ENERGY.

DEC	DEM	DEP	DEF
			X

22.08-101E

CONDUIT POSITIONING IN TRANSFORMERS

1. SINGLE-PHASE PAD-MOUNTED TRANSFORMERS

- CONDUITS SHALL NOT BE INSTALLED OUTSIDE THE DESIGNATED ZONES SHOWN IN THE DRAWING BELOW. THE PAD CANNOT BE INSTALLED IF THESE DIMENSIONS ARE EXCEEDED. DUKE ENERGY RECOMMENDS THAT A TEMPLATE BE CONSTRUCTED AND USED TO VERIFY PROPER LOCATION OF THESE CONDUITS. THE OPENING ON THE CONCRETE PAD IS 24"X14".

SINGLE-PHASE TRANSFORMER CABLE ENTRANCE ZONES

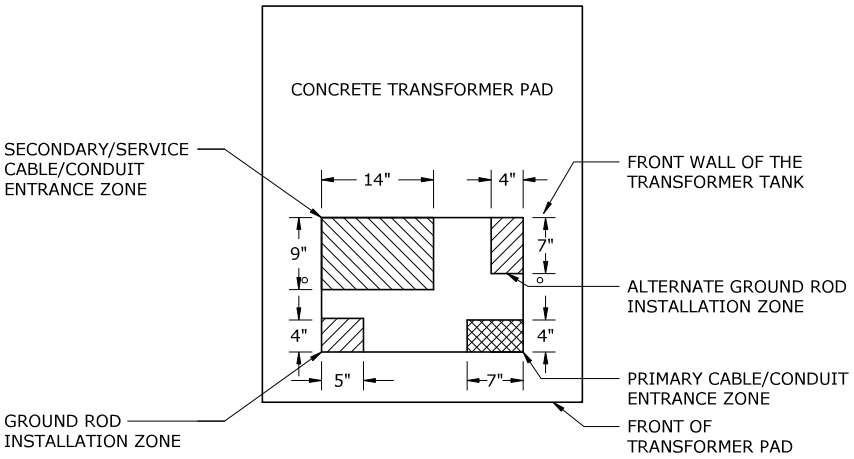

TOP VIEW OF PAD

CONDUIT CONFIGURATIONS IN SINGLE-PHASE PAD-MOUNTED TRANSFORMER PADS

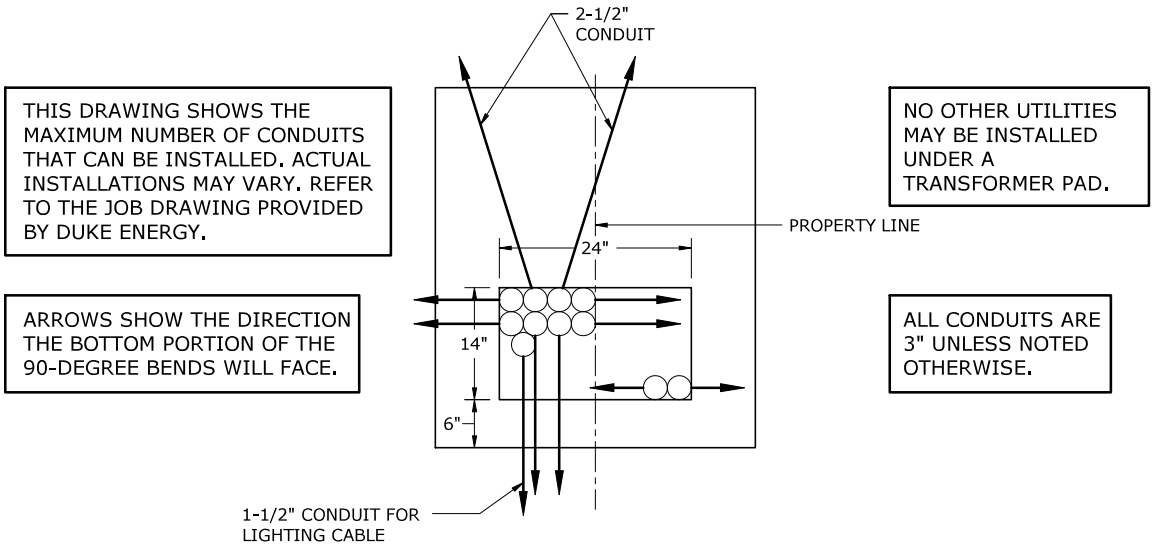

TOP VIEW OF PAD

3					CUSTOMER GUIDE FOR INSTALLING CONDUIT	DEC	DEM	DEP	DEF
2									
1									X
0	10/4/19	FLETCHER	EANES	ADCOCK		22.08-101F			
REVISED		BY	CHK'D	APPR.					

- EIGHT SECONDARY/SERVICE CABLE CONDUITS, TWO PRIMARY CABLE CONDUITS AND ONE LIGHTING CABLE CONDUIT WILL TYPICALLY BE INSTALLED IN SINGLE-PHASE TRANSFORMERS; HOWEVER, ON OCCASION FEWER WILL BE REQUIRED. WHEN FEWER THAN EIGHT (8) SECONDARY/SERVICE BENDS WILL BE INSTALLED, KEEP THE CONDUITS IN THE BACK - LEFT SIDE OF THE CABLE ENTRANCE ZONE.
- BE CERTAIN TO LEAVE A SPACE BESIDE THE CONDUITS FOR THE INSTALLATION OF THE GROUND ROD.
- THE TRANSFORMER PAD MUST BE POSITIONED SO THAT THE FRONT OF THE TRANSFORMER WILL FACE THE STREET.
- THERE SHALL BE NO ABOVE-GROUND OBSTRUCTIONS WITHIN TEN (10) FEET OF THE FRONT OF THE TRANSFORMER OR WITHIN THREE (3) FEET OF THE SIDES AND BACK.
- THE GROUND UNDER THE PAD SHALL BE LEVEL AND THOROUGHLY COMPACTED.
- EXTEND CONDUITS SIX (6) INCHES ABOVE THE LEVEL OF THE SOIL.
- PLACE TWO, FORTY (40) POUND BAGS OF CONCRETE AGAINST EACH 90° BEND CONTAINING SECONDARY/SERVICE CABLE AND THREE, FORTY (40) POUND BAGS AGAINST BENDS CONTAINING PRIMARY CABLE TO PREVENT MOVEMENT DURING CABLE PULLING. DO NOT OPEN THE BAGS, JUST PLACE THEM AGAINST THE BEND.
- INSTALL CONDUIT CAPS ON EACH CONDUIT TO KEEP SAND, RAIN, ETC. OUT OF THE CONDUITS. DO **NOT** GLUE THE CAPS ONTO THE CONDUIT.

2. THREE-PHASE PAD-MOUNTED TRANSFORMERS 75KVA THROUGH 300KVA

- CONDUITS FOR PRIMARY AND SERVICE CABLES SHALL BE INSTALLED AS SHOWN IN THE DRAWING BELOW.

CONDUIT POSITIONS IN SMALL THREE-PHASE PAD-MOUNTED TRANSFORMER PADS

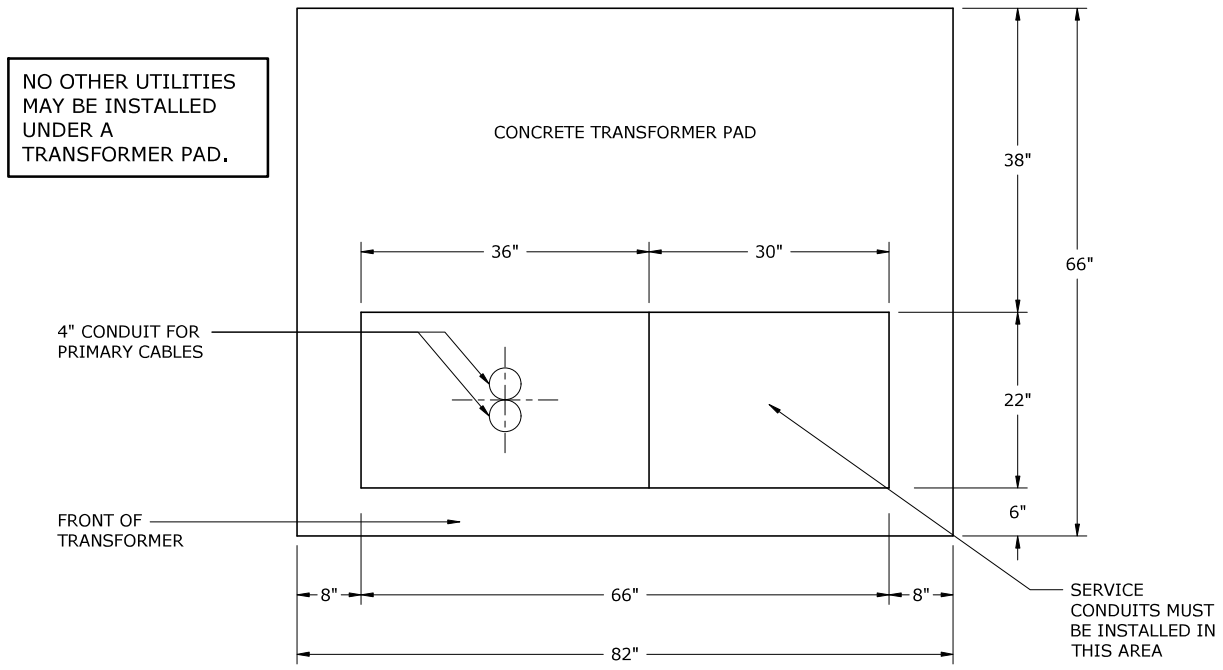

PLAN VIEW

DUKE ENERGY.

REVISED	BY	CHK'D	APPR.	
3				
2	10/1/21	FLETCHER	EANES	GRAHAM
1	9/11/20	DANNA	EANES	GRAHAM
0	10/4/19	FLETCHER	EANES	ADCOCK

CUSTOMER GUIDE FOR INSTALLING CONDUIT

DEC	DEM	DEP	DEF
			X

22.08-101G

- THERE SHALL BE NO ABOVE-GROUND OBSTRUCTIONS WITHIN TEN (10) FEET OF THE FRONT OF THE TRANSFORMER OR WITHIN THREE (3) FEET OF THE SIDES AND BACK.
- SIDE VENTILATION MAY BE REQUIRED IF A WALL IS TO BE CONSTRUCTED AROUND THE TRANSFORMER. CONTACT DUKE ENERGY TO OBTAIN THE REQUIRED SEPARATION BETWEEN THE TRANSFORMER AND A WALL.
- THE GROUND UNDER THE PAD SHALL BE LEVEL AND THOROUGHLY COMPACTED.
- INSTALL CONDUITS FOR THE PRIMARY CABLES AS CLOSE TO THE CENTER OF THE DESIGNATED PRIMARY SIDE OF THE PAD WINDOW AS POSSIBLE.
- CONDUITS FOR SECONDARY/SERVICE MUST REMAIN IN THE AREA SHOWN IN DWG. 22.08-101G.
- PLACE THREE, FORTY (40) POUND BAGS OF CONCRETE AGAINST EACH 90° BEND CONTAINING PRIMARY CABLE TO PREVENT MOVEMENT DURING CABLE PULLING. DO NOT OPEN THE BAGS, JUST PLACE THEM AGAINST THE BEND.
- EXTEND CONDUITS SIX (6) INCHES ABOVE THE LEVEL OF THE SOIL.
- INSTALL CONDUIT CAPS ON EACH CONDUIT TO KEEP SAND, RAIN, ETC. OUT OF THE CONDUITS. DO NOT GLUE THE CAPS ONTO THE CONDUIT.

3. <u>THREE-PHASE PAD-MOUNTED TRANSFORMERS 500KVA THROUGH 5000KVA</u>

- CONDUITS FOR PRIMARY AND SERVICE CABLES SHALL BE INSTALLED AS SHOWN IN THE DRAWING BELOW.

CONDUIT POSITIONS IN LARGE THREE-PHASE PAD-MOUNTED TRANSFORMER PADS

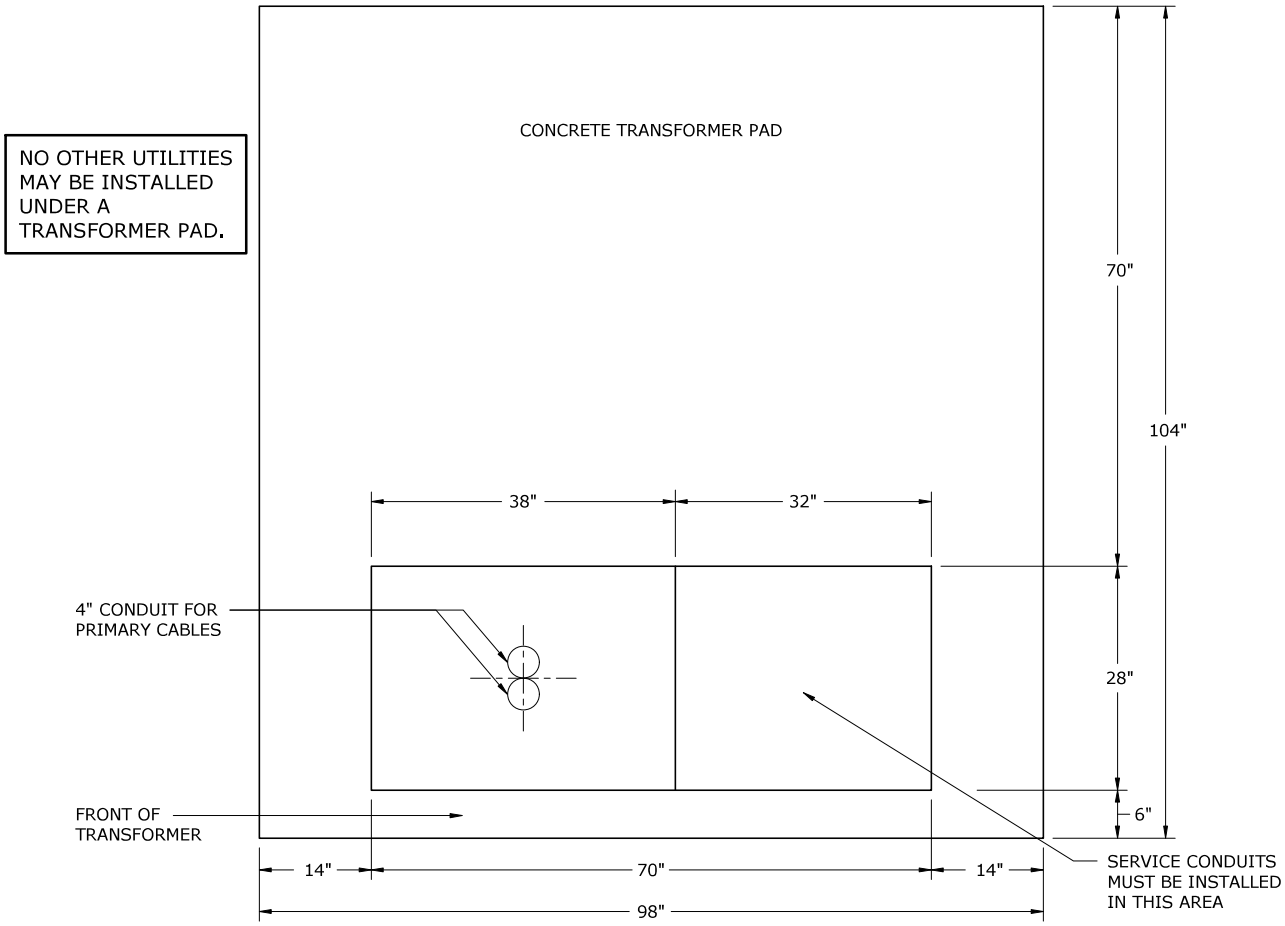

PLAN VIEW

3					CUSTOMER GUIDE FOR INSTALLING CONDUIT	DEC	DEM	DEP	DEF
2									
1	10/1/21	FLETCHER	EANES	GRAHAM					X
0	10/4/19	FLETCHER	EANES	ADCOCK		22.08-101H			
REVISED		BY	CHK'D	APPR.					

- THERE SHALL BE NO ABOVE-GROUND OBSTRUCTIONS WITHIN TEN (10) FEET OF THE FRONT OF THE TRANSFORMER OR WITHIN THREE (3) FEET OF THE SIDES AND BACK.
- SIDE VENTILATION MAY BE REQUIRED IF A WALL IS TO BE CONSTRUCTED AROUND THE TRANSFORMER. CONTACT DUKE ENERGY TO OBTAIN THE REQUIRED SEPARATION BETWEEN THE TRANSFORMER AND A WALL.
- THE GROUND UNDER THE PAD SHALL BE LEVEL AND THOROUGHLY COMPACTED.
- INSTALL CONDUITS FOR THE PRIMARY CABLES AS CLOSE TO THE CENTER OF THE DESIGNATED PRIMARY SIDE OF THE PAD WINDOW AS POSSIBLE.
- CONDUITS FOR SECONDARY/SERVICE MUST REMAIN IN THE AREA SHOWN IN DWG. 22.08-101H.
- PLACE THREE, FORTY (40) POUND BAGS OF CONCRETE AGAINST EACH 90° BEND CONTAINING PRIMARY CABLE TO PREVENT MOVEMENT DURING CABLE PULLING. DO NOT OPEN THE BAGS, JUST PLACE THEM AGAINST THE BEND.
- EXTEND CONDUITS SIX (6) INCHES ABOVE THE LEVEL OF THE SOIL.
- INSTALL CONDUIT CAPS ON EACH CONDUIT TO KEEP SAND, RAIN, ETC. OUT OF THE CONDUITS. DO **NOT** GLUE THE CAPS ONTO THE CONDUIT.

CONDUIT POSITIONING IN PEDESTALS

LOCATION OF PEDESTALS

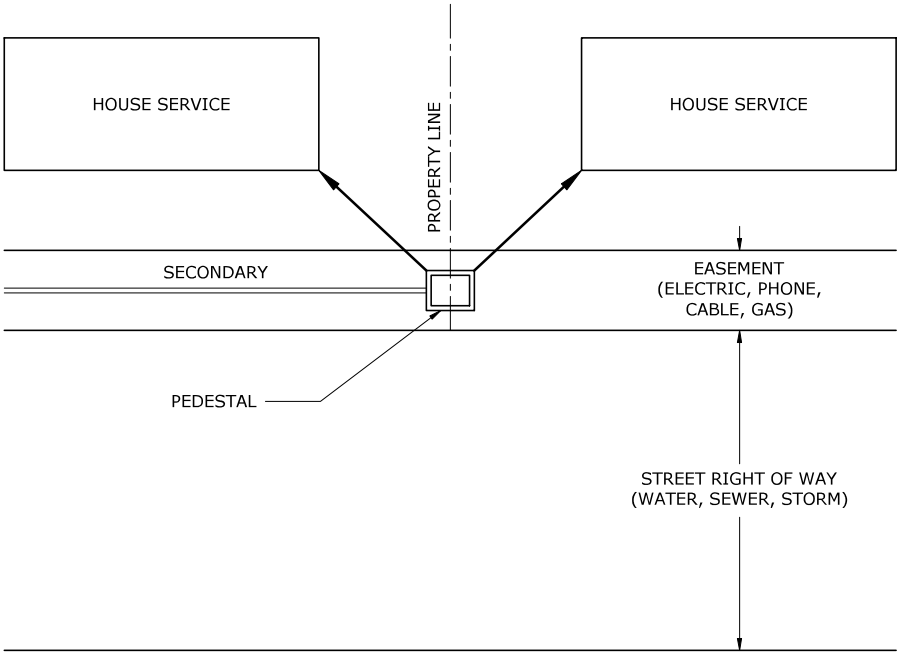

REVISED		BY	CHK'D	APPR.
3				
2				
1	10/1/21	FLETCHER	EANES	GRAHAM
0	10/4/19	FLETCHER	EANES	ADCOCK

CUSTOMER GUIDE FOR INSTALLING CONDUIT

DEC	DEM	DEP	DEF
			X

22.08-101I

POSITIONING CONDUIT IN PEDESTALS

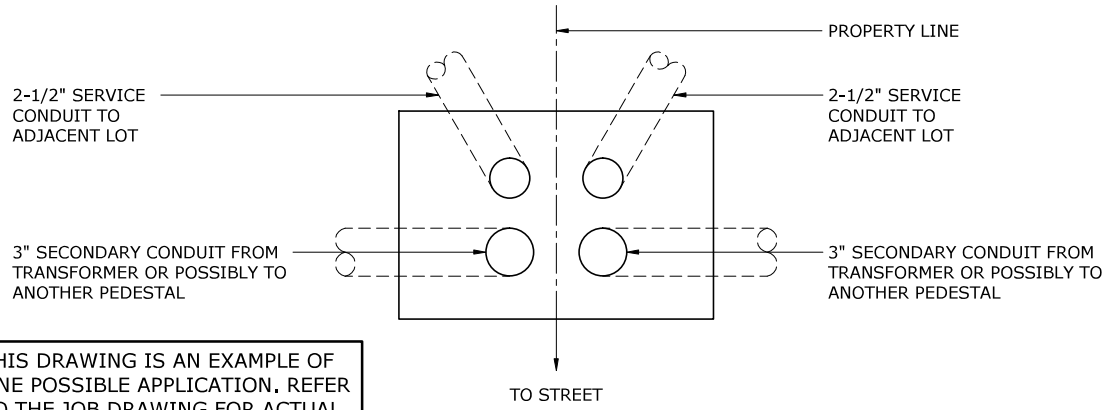

THIS DRAWING IS AN EXAMPLE OF ONE POSSIBLE APPLICATION. REFER TO THE JOB DRAWING FOR ACTUAL INSTALLATIONS.

- SERVICE CONDUIT WILL BE 2-1/2" SCHEDULE 40 PVC. SECONDARY CONDUIT WILL BE 3" SCHEDULE 40 PVC.
- ONLY ONE SECONDARY CONDUIT WILL TYPICALLY BE REQUIRED. FOR THESE APPLICATIONS, THE SECONDARY CONDUIT WILL BE POSITIONED IN THE CENTER OF THE PEDESTAL SUCH THAT THE THREE CONDUITS FORM A TRIANGLE.
- ALL CONDUITS ARE TO BE POSITIONED TOGETHER IN THE CENTER OF THE PEDESTAL.
- PLACE TWO, FORTY (40) POUND BAGS OF CONCRETE AGAINST EACH 90° BEND CONTAINING SECONDARY/SERVICE CABLE TO PREVENT MOVEMENT DURING CABLE PULLING. DO NOT OPEN THE BAGS, JUST PLACE THEM AGAINST THE BEND.
- EXTEND CONDUITS THREE (3) INCHES ABOVE THE GROUNDLINE INSIDE THE PEDESTAL BASE.
- NO ABOVE-GROUND OBSTRUCTION SHALL BE PLACED WITHIN 3 FEET OF A PEDESTAL.
- SOIL BENEATH THE PEDESTAL BASE SHALL BE COMPACTED TO THE FIRMNESS OF UNDISTURBED EARTH AND SHALL BE FREE OF ROOTS AND OTHER ORGANIC MATERIALS.
- INSTALL CONDUIT CAPS ON EACH CONDUIT TO KEEP SAND, RAIN, ETC. OUT OF THE CONDUITS. DO **NOT** GLUE THE CAPS ONTO THE CONDUIT.

CONDUIT POSITIONING IN SWITCHGEAR

- THERE SHALL BE NO ABOVE-GROUND OBSTRUCTIONS WITHIN TEN (10) FEET OF THE FRONT AND BACK OF THE SWITCHGEAR OR WITHIN FIVE (5) FEET OF EACH SIDE.
- THE GROUND UNDER THE PAD SHALL BE LEVEL AND THOROUGHLY COMPACTED.
- PLACE THREE, FORTY (40) POUND BAGS OF CONCRETE AGAINST EACH 90° BEND CONTAINING PRIMARY CABLE TO PREVENT MOVEMENT DURING CABLE PULLING. DO NOT OPEN THE BAGS, JUST PLACE THEM AGAINST THE BEND.
- EXTEND CONDUITS SIX (6) INCHES ABOVE THE LEVEL OF THE SOIL IN THE BOTTOM OF THE PIT PAD.
- INSTALL CONDUIT CAPS ON EACH CONDUIT TO KEEP SAND, RAIN, ETC. OUT OF THE CONDUITS. DO NOT GLUE THE CAPS ONTO THE CONDUIT.
- THERE ARE TOO MANY DIFFERENT TYPES AND CONFIGURATIONS OF PAD-MOUNTED SWITCHGEAR TO LIST IN THIS DOCUMENT. DUKE ENERGY WILL PROVIDE CONDUIT PLACEMENT INFORMATION FOR THE SPECIFIC SWITCHGEAR THAT IS TO BE INSTALLED WHEN IT IS REQUIRED. NOT ALL SUBDIVISIONS WILL REQUIRE SWITCHGEAR.

REVISED		BY	CHK'D	APPR.
3				
2	9/2/22	DANNA	EANES	GRAHAM
1	10/1/21	FLETCHER	EANES	GRAHAM
0	10/4/19	FLETCHER	EANES	ADCOCK

CUSTOMER GUIDE FOR INSTALLING CONDUIT

DEC	DEM	DEP	DEF
			X

22.08-101J

CONDUIT POSITIONING AT RISERS (POLE AND PREMISE)

- DUKE ENERGY WILL STAKE THE EXACT LOCATION OF THE POLE RISER.
- SEE THE MATERIAL REQUIREMENTS SECTION OF THIS DOCUMENT TO DETERMINE THE CORRECT CONDUIT SIZE. DUKE ENERGY WILL ALSO PROVIDE THIS INFORMATION AND IDENTIFY THE SIDE OF THE POLE WHERE THE RISER WILL BE INSTALLED.
- EXTEND CONDUITS SIX (6) INCHES ABOVE FINAL GRADE OF THE SOIL.
- INSTALL CONDUIT CAPS ON EACH CONDUIT TO KEEP SAND, RAIN, ETC. OUT OF THE CONDUITS. DO NOT GLUE THE CAPS ONTO THE CONDUIT.
- PLACE THREE, FORTY (40) POUND BAGS OF CONCRETE AGAINST EACH 90° BEND CONTAINING PRIMARY CABLE TO PREVENT MOVEMENT DURING CABLE PULLING. DO NOT OPEN THE BAGS, JUST PLACE THEM AGAINST THE BEND.

RISER POLE INSTALLATION

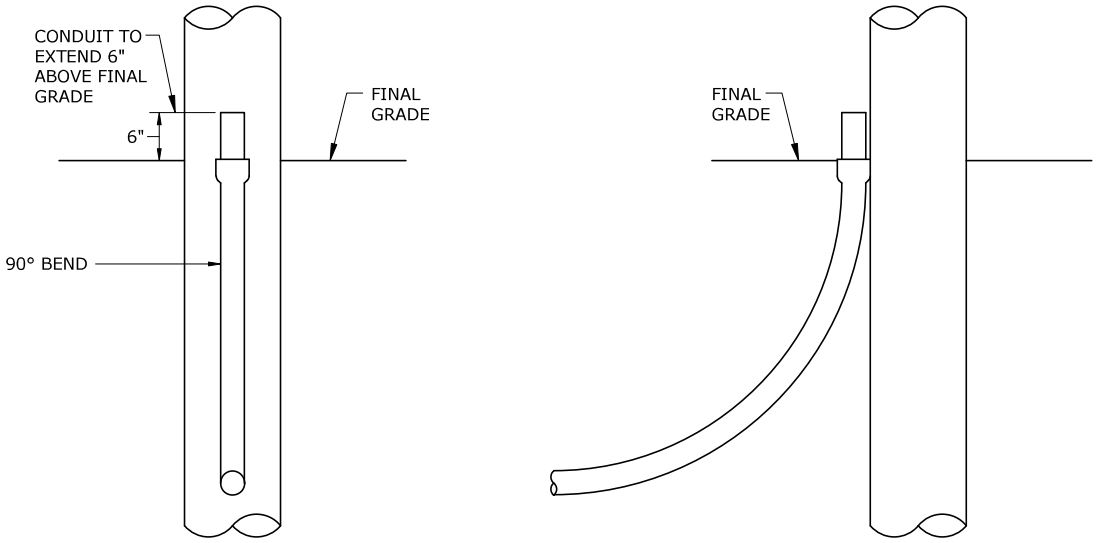

FRONT VIEW

SIDE VIEW

PREMISE SERVICE RISER

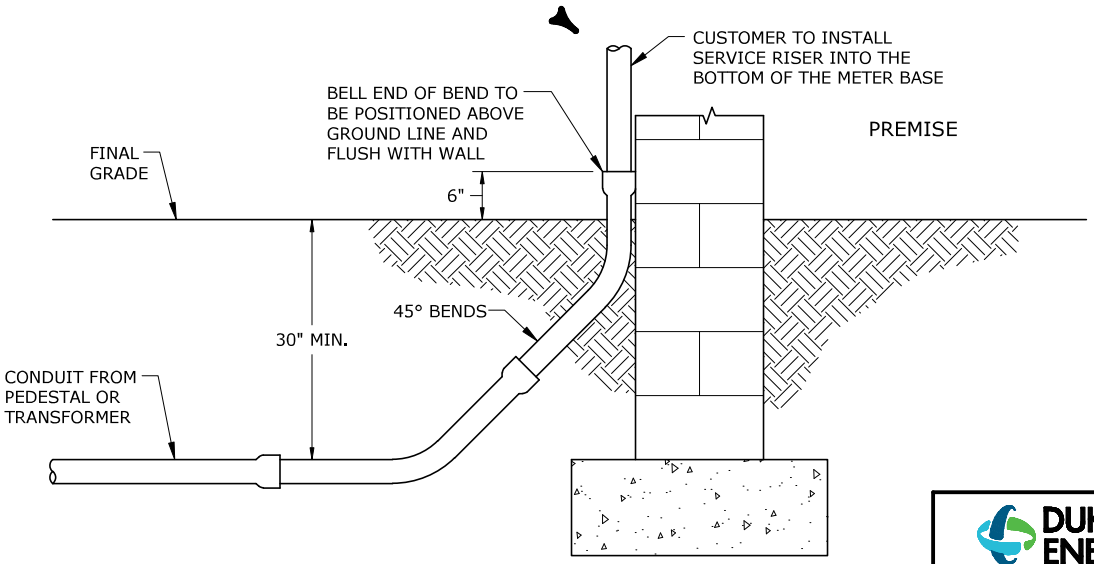

REVISED	BY	CHK'D	APPR.
3			
2 2/14/22	DANNA	EANES	GRAHAM
1 10/1/21	FLETCHER	EANES	GRAHAM
0 10/4/19	FLETCHER	EANES	ADCOCK

CUSTOMER GUIDE FOR INSTALLING CONDUIT

DEC	DEM	DEP	DEF
			X

22.08-101K

CONDUIT POSITIONING IN PULLBOXES

PULLBOXES ARE BELOW-GRADE, CONCRETE ENCLOSURES USED TO FACILITATE THE INSTALLATION OF CABLE IN CONDUIT SYSTEMS. DUKE ENERGY USES TWO SIZES OF PULLBOXES AS SHOWN IN THE FOLLOWING DRAWINGS. DUKE ENERGY WILL PROVIDE AND INSTALL ALL REQUIRED PULLBOXES. THEY WILL ALSO STAKE THE LOCATIONS WHERE ANY PULLBOXES WILL BE INSTALLED AND IDENTIFY THE SIZE OF EACH PULLBOX.

1. SMALL PULLBOX

- THIS PULLBOX DOES NOT HAVE A BOTTOM AND THERE ARE NO OPENINGS ON THE SIDES FOR CONDUIT.
- THE CUSTOMER WILL BE REQUIRED TO DIG A 24" DEEP PIT WHERE EACH SMALL PULLBOX WILL BE INSTALLED. PLACE TWO 45-DEGREE BENDS AS SHOWN IN THE DRAWINGS BELOW USING EITHER THE TWO "A" POSITIONS OR THE TWO "B" POSITIONS. THE CENTER OF THE CONDUIT BEND DIAMETER MUST BE WITHIN 6" OF THE ADJACENT PULLBOX WALLS. THE TOP OF EACH BEND SHALL BE 6" ABOVE THE BOTTOM OF THE PIT.

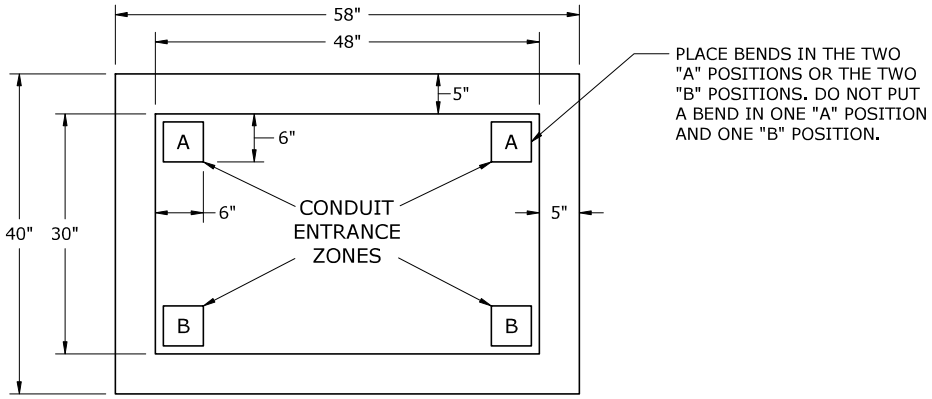

TOP VIEW

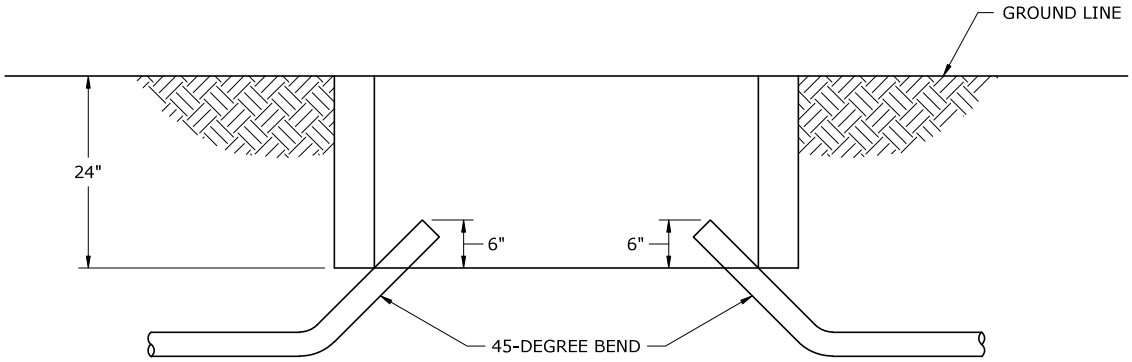

SIDE VIEW

3					CUSTOMER GUIDE FOR INSTALLING CONDUIT	DEC	DEM	DEP	DEF
2									
1									X
0	10/4/19	FLETCHER	EANES	ADCOCK		22.08-101L			
REVISED		BY	CHK'D	APPR.					

2. LARGE PULLBOX

- THE LARGE PULLBOX IS COMPOSED OF THREE PARTS. THERE IS A BOTTOM SECTION, A TOP SECTION AND A LID. THIS PULLBOX HAS CONDUIT ENTRANCES ON EACH END FOR 6" CONDUIT THAT ARE POSITIONED AS SHOWN IN THE DRAWING BELOW.
- THE CUSTOMER SHALL POSITION THE CONDUIT THEY ARE INSTALLING SUCH THAT IT WILL ALIGN WITH THE CONDUIT ENTRANCES ON THE PULLBOX WHEN IT IS INSTALLED.

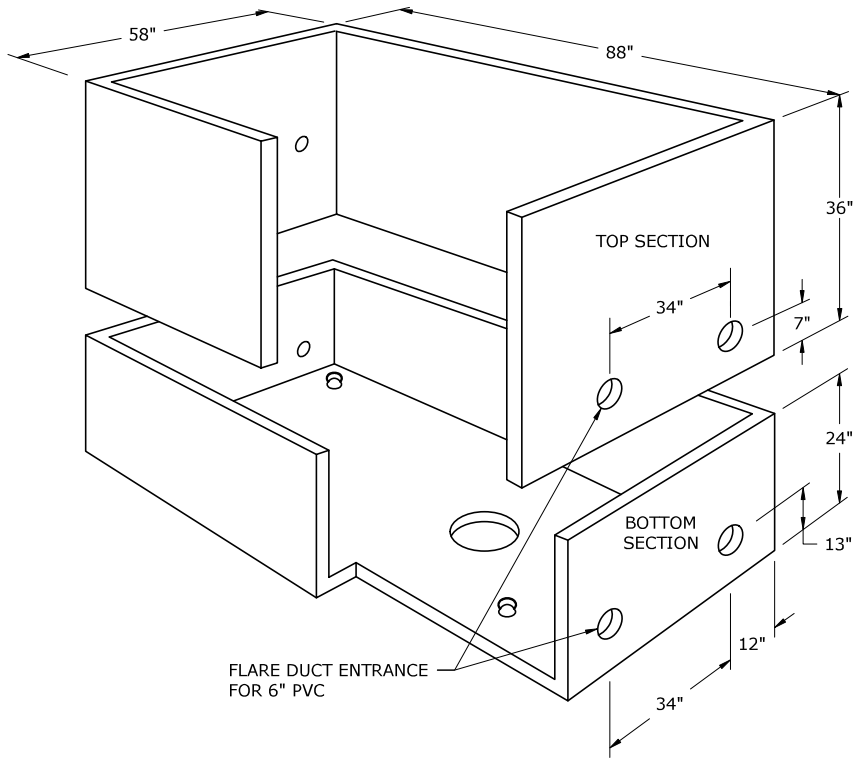

THREE-DIMENSIONAL VIEW

3					CUSTOMER GUIDE FOR INSTALLING CONDUIT	DEC	DEM	DEP	DEF
2									
1									X
0	10/4/19	FLETCHER	EANES	ADCOCK		22.08-101M			
REVISED		BY	CHK'D	APPR.					

CLEARANCES

SEPARATION MUST BE MAINTAINED BETWEEN CONDUITS INSTALLED FOR DUKE ENERGY AND OTHER CABLES, PIPES OR STRUCTURES AS SHOWN IN THE FOLLOWING TABLE AND DRAWINGS.

PRIMARY OR SECONDARY CABLES IN A CONDUIT SYSTEM			
PARALLELING	HORIZONTAL SEPARATION (IN)	CROSSING	VERTICAL SEPARATION (IN) (SEE NOTE 2)
COMMUNICATION LINES	12	COMMUNICATION LINES	12
WATER LINES	36	WATER LINES	12
SEWER LINES	36	SEWER LINES	12
FUEL LINES	36	FUEL LINES	12
STEAM LINES	60	STEAM LINES	36
CUSTOMER-OWNED CABLES	36	CUSTOMER-OWNED CABLES	12
IN-GROUND SWIMMING POOL	60	IN-GROUND SWIMMING POOL	N/A

NOTES:

1. THE HORIZONTAL AND VERTICAL SEPARATION SHOULD BE ADEQUATE TO PERMIT ACCESS AND MAINTENANCE OF EITHER FACILITY TO LIMIT DAMAGE TO THE OTHER. THE DISTANCES SHOWN IN THE TABLE ABOVE HAVE BEEN FOUND TO MEET THESE CRITERIA.
2. VERTICAL SEPARATION MUST BE SUFFICIENT TO LIMIT THE LIKELIHOOD OF DETRIMENTAL LOAD BEING TRANSFERRED TO EITHER OF THE UTILITIES OR STRUCTURES INVOLVED. THE DISTANCES SHOWN IN THE ABOVE TABLE HAVE BEEN FOUND TO MEET THESE CRITERIA.
3. CONTACT DUKE ENERGY WHEN DIMENSIONAL VARIANCES ARE REQUIRED.

REVISED		BY	CHK'D	APPR.
3				
2				
1				
0	10/4/19	FLETCHER	EANES	ADCOCK

CUSTOMER GUIDE FOR INSTALLING CONDUIT

DUKE ENERGY.

DEC	DEM	DEP	DEF
			X

22.08-101N

INSTALLING UNDERGROUND CABLES PARALLEL TO STRUCTURES

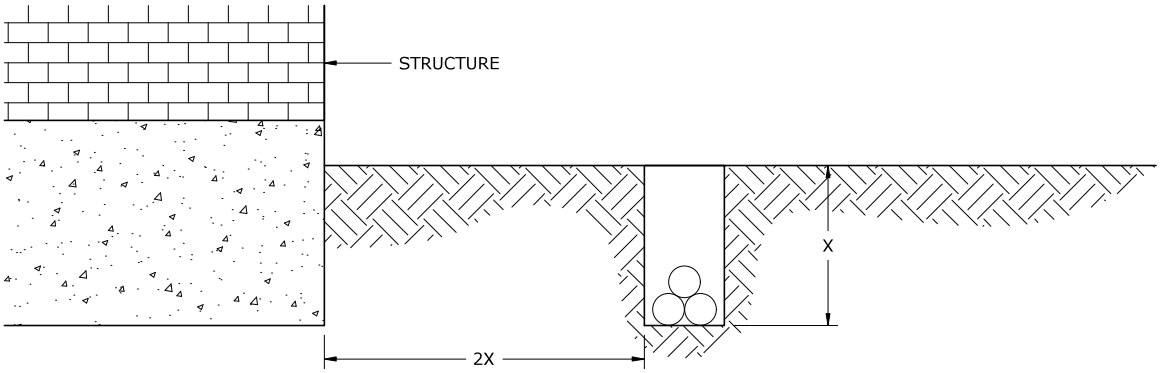

NOTES:

1. WHEN INSTALLING UNDERGROUND CABLE PARALLEL TO EXISTING STRUCTURES, OR THOSE THAT ARE UNDER CONSTRUCTION, IT IS NECESSARY TO MAINTAIN ADEQUATE CLEARANCE FROM THOSE STRUCTURES. THIS CLEARANCE IS NECESSARY TO MAINTAIN THE INTEGRITY OF THE SOIL, AND THE SUPPORT PROVIDED BY THE SOIL, UNDER THE FOUNDATION OF THE STRUCTURE.

2. UNDERGROUND FACILITIES INSTALLED PARALLEL TO A STRUCTURE SHOULD BE LOCATED AT LEAST TWICE AS FAR AWAY FROM THE STRUCTURE AS THE DEPTH OF THE TRENCH THAT IS DUG. FOR EXAMPLE, IF A TRENCH IS TO BE TWO (2) FEET DEEP, THEN THE TRENCH MUST BE LOCATED AT LEAST FOUR (4) FEET AWAY FROM THE STRUCTURE.

3. THIS REQUIREMENT DOES NOT APPLY TO CABLE THAT IS NOT INSTALLED PARALLEL TO A STRUCTURE.

4. ON INSTALLATIONS WHERE THE CABLE CANNOT BE INSTALLED TWICE AS FAR FROM THE FOUNDATION AS THE CABLE IS DEEP, THE SOIL MUST BE COMPACTED THROUGHOUT THE ENTIRE TRENCH DEPTH TO 100% OF THE ORIGINAL SOIL DENSITY IN ALL AREAS WHERE ADEQUATE SEPARATION CANNOT BE OBTAINED FROM THE FOUNDATION.

DUKE ENERGY.

3					CUSTOMER GUIDE FOR INSTALLING CONDUIT	DEC	DEM	DEP	DEF
2									
1									X
0	10/4/19	FLETCHER	EANES	ADCOCK		22.08-101O			
REVISED		BY	CHK'D	APPR.					

DUKE ENERGY CONDUIT CHECKLIST

THIS CHECKLIST WILL BE USED TO EVALUATE FULL-CONDUIT SYSTEMS UPON INSPECTION BY DUKE ENERGY. PLEASE ENSURE ALL ITEMS HAVE BEEN FULLY VERIFIED AND COMPLETED BEFORE FINAL CONDUIT INSPECTION. FAILURE TO ENSURE ALL ITEMS ARE FULLY VERIFIED AND COMPLETED MAY RESULT IN DELAYS IN YOUR PROJECT.

PROJECT DETAILS:

PROJECT NAME:_____ TYPE OF PROJECT:_____

DEVELOPER NAME/COMPANY:_____ WORK ORDER OWNER:_____

CONDUIT CONTRACTOR:_____ WORK ORDER #:_____

CONDUIT COMPANY:_____ CONSTRUCTION COORDINATOR:_____

CONDUIT:

- ☐ SCHEDULE 40 GRAY PVC PIPE USED FOR ALL CONDUIT APPLICATIONS

  NO GALVANIZED OR METAL CONDUIT APPLICATIONS.
- ☐ PROPER SIZE OF CONDUIT USED FOR SPECIFIC CONDUIT APPLICATIONS. **(REFER TO CUSTOMER GUIDE 22.08-101E)**.
- ☐ PROPER SEPARATION BETWEEN CONDUITS AND OTHER UTILITIES. **(REFER TO CUSTOMER GUIDE 22.08-101N)**.
- ☐ PROPER SWEEPS ARE INSTALLED WHERE NECESSARY:

  36" SWEEPS ON 4" CONDUIT OR LESS; 48" SWEEPS ON 6" CONDUIT.
- ☐ CONDUIT BURIED AT PROPER DEPTH (INCLUDING SWALES):

  SECONDARY/SERVICE CABLE: 30"; PRIMARY AND ALL CROSSINGS - 36".
- ☐ CONDUIT IS PLACED IN LINEAR FASHION WITH NO HORIZONTAL OR VERTICAL DEVIATIONS.
- ☐ PROPER NUMBER OF CONCRETE BAGS ON ALL SWEEPS:

  ➤ 2-40 LB BAGS ON 90-DEGREE BENDS CONTAINING SECONDARY/SERVICE CABLE; 3-40 LB BAGS ON 90-DEGREE BENDS CONTAINING PRIMARY CABLE.
- ☐ BAGS OF CONCRETE ARE PLACED UNOPENED ON INSIDE RADIUS OF ALL SWEEPS. **(REFER TO CUSTOMER GUIDE 22.08-101E)**.
- ☐ ALL SHARP CUT EDGES HAVE BEEN REMOVED FROM INTERIOR AND EXTERIOR OF CONDUIT.
- ☐ CONDUIT IS WITHOUT DAMAGE OR COMPROMISE THROUGHOUT CONDUIT SYSTEM.
- ☐ ALL CONDUIT RUNS HAVE BEEN MANDREL TESTED AND NECESSARY REPAIRS MADE.
- ☐ ALL MATING SURFACES AND COUPLINGS OF CONDUIT SECTIONS HAVE BEEN CLEANED AND GLUED PROPERLY.
- ☐ CAPS ARE PLACED, NOT GLUED, ON ALL CONDUIT ENDS.
- ☐ ALL CONDUIT RUNS HAVE PULL STRING INSTALLED AND SECURED WITH NO KNOTS OR SPLICES.

EQUIPMENT LOCATIONS:

- ☐ ALL TRANSFORMER, SWITCHGEAR, STREET LIGHT, AND PEDESTAL LOCATIONS HAVE BEEN VERIFIED AND CONFIRMED TO BE CLEAR OF ALL OBSTRUCTIONS, UTILITIES, AND STRUCTURES BEFORE CONDUIT PLACEMENT PER DUKE ENERGY STANDARDS. **(REFER TO REQUIREMENTS FOR ELECTRIC SERVICE AND METER INSTALLATIONS, FIGURE 20C)**
- ☐ ALL CONDUITS ARE CUT OFF 6" ABOVE FINAL GRADE AT ALL TRANSFORMER LOCATIONS.
- ☐ ALL CONDUITS AT OPEN POINT TRANSFORMER LOCATIONS HAVE CORRECT ORIENTATION.
- ☐ TEMPLATES USED TO VERIFY ALL CONDUITS ARE SPACED CORRECTLY PER DUKE ENERGY STANDARDS AT TRANSFORMER LOCATIONS, INCLUDING SERVICE CONDUITS. **(REFER TO CUSTOMER GUIDE: 22.08-101F, 22.08-101G, AND 22.08-101H)**
- ☐ ALL CONDUITS ARE SPACED CORRECTLY PER DUKE ENERGY STANDARDS AT PEDESTAL LOCATIONS. **(REFER TO CUSTOMER GUIDE: 22.08-101J)**
- ☐ ALL TRANSFORMER SITES ARE COMPACTED AND LEVELED AFTER CONDUIT PLACEMENT.
- ☐ ALL THREE-PHASE TRANSFORMER PADS MEET DUKE ENERGY STANDARDS INCLUDING CONDUIT PLACEMENT/SPACING AND APPROVED PRE-CAST PAD VENDORS. **(REFER TO REQUIREMENTS FOR ELECTRIC SERVICE AND METER INSTALLATIONS, PAGE 24)**
- ☐ CONDUIT INSTALLED FROM THE TRANSFORMER / PEDESTAL INTO THE METER BASE IS PLACED ON THE LEFT BOTTOM SIDE OF THE METER BASE. CONDUIT IS IN CONTACT WITH STRUCTURE/WALL.
- ☐ CONDUIT AT TERMINAL POLE(S) ARE PLACED PER DUKE ENERGY STAKE LOCATION AT POLE(S).

DUKE ENERGY.

REVISED		BY	CHK'D	APPR.
3				
2				
1	10/1/21	FLETCHER	EANES	GRAHAM
0	5/15/20	DANNA	EANES	GRAHAM

CUSTOMER GUIDE

FOR INSTALLING CONDUIT- CHECKLIST

DEC	DEM	DEP	DEF
			X

22.08-101P

NOTE:
1. ALL MEASUREMENTS ARE TO THE FACE OF CURB
2. ALL IMPROVEMENTS TO BE DEDICATED AND/OR MAINTAINED BY THE CITY SHALL BE IN CONFORMANCE WITH THE CURRENT CITY OF OCOEE ENGINEERING STANDARDS MANUAL, MATERIALS LIST, AND DETAILS. FINAL APPROVAL DOES NOT PROVIDE EXEMPTION TO THESE REQUIREMENTS.
3. ANY DEVIATION FROM THE CITY OF OCOEE ENGINEERING STANDARDS MUST BE APPROVED IN WRITING PRIOR TO CONSTRUCTION.
4. IF EXISTING PVC PIPE TO REMAIN IS NOT RESTRAINED, CONSTRUCT PIPE RESTRAINTS.

PARKING COUNT:
STANDARD = 21
ADA = 4
TOTAL = 25

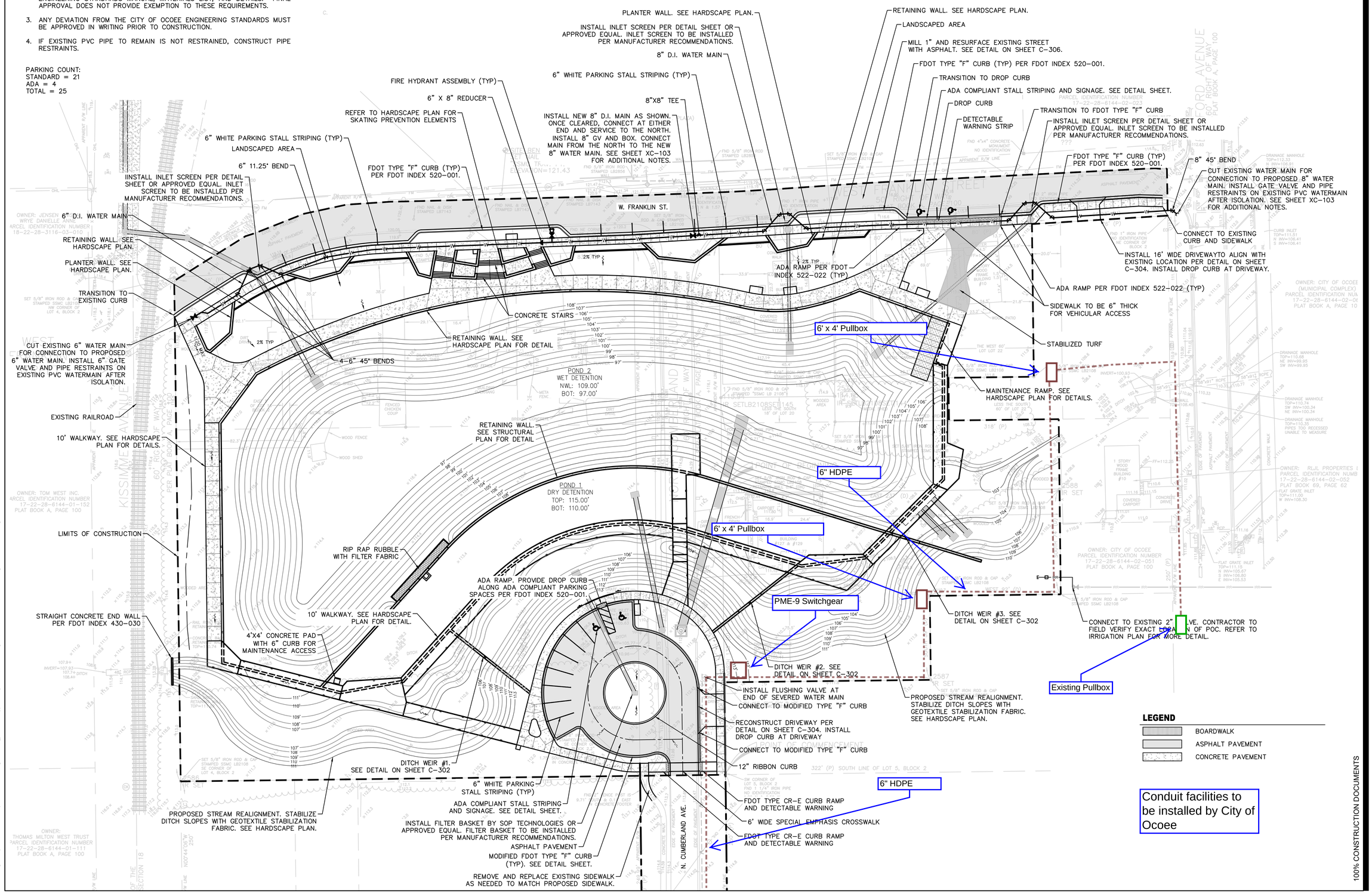

100% CONSTRUCTION DOCUMENTS

COMMUNITY SOLUTIONS GROUP
618 E. SOUTH STREET
SUITE 700
ORLANDO, FL 32801
407 423-8398
CERTIFICATE OF AUTHORIZATION: EB9951

PROJECT
DOWNTOWN STORMWATER POND & PARK
OCOEE , FLORIDA

CLIENT
CITY OF OCOEE
150 NORTH LAKESHORE DRIVE
OCOEE, FL, 34761
407.905.3100 tel

REGISTRATION

ISSUED FOR:

BID	1/18/2021

PROJECT NUMBER	A180202.01
SCALE:	
DATE:	08-23-2020
DRAWN:	ADL
CHECKED:	WSL
APPROVED:	WSL

SCALE AND NORTH ARROW

SHEET TITLE
SITE PLAN

SHEET NUMBER
C-101

A GAI CONSULTANTS, INC SERVICE GROUP

\\GAICONSULTANTS.LOCAL\BUPROJ\INFA\2018\A180202.01 - OCOEE STORMWATER CD\CAD\CIVIL\PRODUCTION DRAWINGS\A180202.01 C-100 SITE PLAN.DWG
This drawing was produced with computer aided drafting technology and is supported by electronic drawing files. Do not revise this drawing as manual drafting medium.

PROP. 2' DETECTABLE WARNING SURFACE PER DETAIL SHEET

6" CONC. DRIVEWAY PER CITY DETAIL

BRICK PAVER CROSSWALK OR PARKING STALL PER DETAIL SHEET

GRAPHIC SCALE 20 0 10 20 40 (IN FEET)

N

MATCH LINE STA. 25+00.00

W Oakland Ave.

N. Cumberland Ave.

S. Bluford Ave.

℄ SURVEY (CUMBERLAND)

MATCH EXIST. ROADWAY

MATCH EXIST. C&G

MATCH EXIST. S/W

MATCH EXIST. C&G

MATCH EXIST. SIDEWALK

PROP. T.C.E. EASEMENT

INSTALL IN-SITU INFILTROMETER PER DETAIL

CONST. 90 LF OF 24" RCP

CONST. 112 LF OF 24" RCP

PROP. TYPE D CURB

PROP. 4" THICK CONC. S/W

PROP. TYPE F C&G

EXIST. R/W

CONST. CONC. 12" RIBBON CURB

EXIST. MAILBOXES (TO BE RELOCATED)

PROP. 4" THICK CONC. S/W

PROP. T.C.E. EASEMENT

MATCH EXIST. S/W

PROP. TYPE D CURB

INSTALL IN-SITU INFILTROMETER PER DETAIL

MATCH EXIST. C&G

WALL PER HARDSCAPE PLAN

FOR ℄ TRAIL AND MEDIAN DETAILS SEE SHEET 17-18

CONST. CONC. 12" RIBBON CURB

PROP. DROP CURB

CONST. CONC. 12" RIBBON CURB

PROP. TYPE F C&G

PROP. CONC. SEATING PAD (TYP.)

PROP. DROP CURB

MATCH EXIST. EOP

26 PROP. PGL LT N89°33'41"E

PROP. PGL LT

PROP. PGL RT

CONST. 68 LF OF 34"x53" ERCP

CONST. 93 LF OF 24" RCP

PROP. PGL RT

℄ SURVEY (OAKLAND)

N89°33'41"E

N89°09'09"E

PROP. PGL RT

CONST. 90 LF OF 24" RCP

℄ SURVEY (OAKLAND)

PROP. TYPE F C&G

PROP. DROP CURB

CONST. 66 LF OF 24" RCP

PROP. DROP CURB

MATCH EXIST. EOP

MATCH EXIST. C&G

6" HDPE

BENCHMARK

CONST. CONC. 12" RIBBON CURB

PROP. TYPE F C&G

CONST. 90 LF OF 24" RCP

CONST. 113 LF OF 24" RCP

CONST. CONC. 12" RIBBON CURB

CONST. CONC. 12" RIBBON CURB

EXIST. MAILBOXES (TO BE RELOCATED)

EXIST. R/W

MATCH EXIST. S/W

PROP. T.C.E. EASEMENT

EXIST. MAILBOXES (TO BE RELOCATED)

INSTALL IN-SITU INFILTROMETER PER DETAIL

PROP. TYPE D CURB

EXIST. MAILBOXES (RELOCATED FROM STA. 27+91)

PROP. 4" THICK CONC. S/W

INSTALL IN-SITU INFILTROMETER PER DETAIL

ADJUST EXIST. MANHOLE TO PROP. GRADE

PROP. T.C.E. EASEMENT

EXIST. MAILBOXES (RELOCATED FROM STA. 24+92)

PROP. 4" THICK CONC. S/W

CONST. 10 LF OF 34"X53" ERCP

MATCH EXIST. S/W

CONST. 12" CONC. RIBBON CURB

CONST. 11 LF OF 24" RCP

PROP. TYPE D CURB

PI: 30+75.53

STATION EQUATION

STA. 26+92.33 – ℄ SURVEY (OAKLAND)=

STA. 100+00.00 – ℄ SURVEY (CUMBERLAND)

END PROJECT

END CONSTRUCTION

W OAKLAND AVE

℄ SURVEY – STA. 30+64.04

EXIST. R/W

PME-9 Switchgear @ 18 W Oakland Ave Requires Easement

6" HDPE

Alley

NOTE:
ALL POWER POLES WITHIN PROJECT LIMITS ARE SUBJECT TO RELOCATION PER DUKE ENERGY PLANS.

Existing PME-9 Switchgear @ 2 N Bluford Ave

No.	Date	Revision	By	No.	Date	Revision	By
1				5			
2				6			
3				7			
4				8			

cph www.cphcorp.com

A Full Service A & E Firm

Architects, Engineers, Environmental, Landscape Architects, M/E/P, Planners, Surveyors, Traffic/Transportation

Offices In: • Florida • Puerto Rico • Connecticut • Maryland • Texas

Designed by:	CJT	Date: 9/12/2023
Drawn by:	AM/CJT	Scale: AS NOTED
Checked by:	KRL	
Approved by:	JML	
Job No.	O6012	©2023

Oakland Ave.
City of Ocoee, Florida

Plans Prepared By: CPH, Inc. 500 W. Fulton St. Sanford, FL 32771 Ph: 407.322.6841

JOSEPH M LOFASO, P.E. FL P.E. No. 88718

Plan Sheet
Sta. 25+00 to Sta. 31+00

Sheet No. 14

Drawing name: J:\O6012\Roadway\Roadway\PLAN\R01.dwg Sep 12, 2023 - 4:01pm amejia

BECHTOL ENGINEERING
AND TESTING, inc.

November 30, 2020
BET Project No. G17175

TO: Mr. Kurt Luman, P.E.
CPH, Inc.
500 Fulton Street
Sanford, Florida 32771

RE: Preliminary Geotechnical Report
Roadway Improvements
Downtown Streets
Ocoee, Florida

Dear Mr. Luman:

As requested, Bechtol Engineering and Testing, Inc. (BET) has completed a Preliminary Geotechnical Study relative to proposed roadway improvements along various streets within The City of Ocoee. The purpose of BET's services was to evaluate existing pavement sections, and shallow subgrade soil and groundwater characteristics within the areas of proposed improvements, and based on these characteristics, to provide appropriate subgrade soil preparation recommendations.

BET's field study, completed on March, 2018, consisted of extracting core specimens from the existing roadways at twelve (12) locations, advancing four (4) Standard Penetration Test (SPT) borings (ASTM D-1586) within the proposed sign structure areas, each to depth of 30 feet, and twenty (20) auger borings along existing streets, to depths ranging from 6 to 8 feet below existing ground surface. Approximate locations of the test borings are shown on the Boring Location Plan presented on Sheet A1 in Appendix A. Encountered subsurface conditions are presented in the form of Soil Profiles, along with corresponding Soil and Symbol Legend, on Sheets A2 through A4 in Appendix A.

In general, the borings conducted in the proposed sign structure areas encountered 2.0 to 3.5 feet of surficial fill soils comprised of mixed dark brown to brown and gray-brown fine sand to slightly silty fine sands (Stratum 1), existing mostly in a loose to medium dense condition. Boring TB-4 encountered 1.0 feet of surficial soils comprised of very loose dark brown to gray-brown fine sand (Stratum 2). Underlying soils consisted of very loose to medium dense light brown to brown and light gray to light gray-brown fine sand (Stratum 3) and/or medium dense to dense dark brown to dark reddish-brown slightly silty to silty fine sand (Stratum 4), extending to depths ranging from 6.0 to 7.5 feet below existing ground surface. Underlying soils to the boring termination depths consisted of light gray to gray, light brown to brown and gray-brown slightly clayey to clayey fine sand, some with sandy clays (Stratum 6). BET notes that soils underlying Stratum 4 at boring TB-1 consisted of discontinuous layers of Stratum 6 soils containing intermittent layers of dark brown to brown fine sand to slightly silty fine sand (Stratum 5) and gray sandy clay (Stratum 7) present at varying depths. For a more in-depth soil stratification, please refer to the Soil Profiles presented on the attached Sheet A2.

Borings conducted in the existing pavement areas encountered a pavement section consisting of asphaltic concrete or brick pavers (Stratum P) ranging from 1.0 to 4.5 inches in thickness, underlaid by a soil-cement or limerock base course (Stratum B) ranging from 4.0 to 12.0 inches in thickness. Underlying subgrade consisted of 0.5 to 3.0 feet of apparent fill material (Stratum 1), underlaid by 0.5

to 3.2 feet of fine sand (Stratum 2) and/or 1.5 to 5.1 feet of fine sand (Stratum 3), underlaid by slightly silty to silty fine sand, fine sand to slightly silty fine sand and slightly clayey to clayey fine sand (Strata 4, 5 and 6) to the boring termination depths of 6 to 8 feet. For a more in-depth soil stratification, please refer to the Soil Profiles presented on the attached Sheets A2 through A4.

Groundwater levels, as measured at the soil boring locations, were encountered mostly at depths ranging from 3.5 to 7.0 feet below the ground surface existing at the time of drilling. In exception was boring TB-4 where groundwater was encountered at depth of 12 feet, and at borings AB-16, AB-19 and AB-20, where groundwater was not encountered within the drilled depth of 8 feet. Groundwater levels are subject to variation due to seasonal climate changes and man induced influences. BET envisions that groundwater may temporarily rise to levels about 18 to 24 inches above those encountered at the time of drilling.

It is BET's understanding that it is desirable to re-construct the existing streets with asphaltic concrete surface course over limerock or crushed concrete base course and stabilized subgrade. Proposed finish pavement grades were not known at the time of this report, however BET envisions construction at or slightly above existing grades. Design vehicle loadings and frequencies were not known at the time of this report, but traffic is anticipated to consist of unlimited light-duty cars, pick-up trucks and vans, and average daily truck traffic of up to 500 repetitions. Preliminary Pavement Section Recommendations are presented as Attachment B of this report.

For purposes designing sign structure foundations, pavement sections or other structural improvements, BET recommends the use of the following estimated soil parameters:

SOIL PARAMETER	ASSUMED VALUE
Moist Unit Weight	110 PCF
Saturated Unit Weight	125 PCF
Submerged Unit Weight	60 PCF
Internal Friction Angle	30°
Active Earth Pressure Coefficient	0.33
Passive Earth Pressure Coefficient	3.00
At-Rest Earth Pressure Coefficient	0.50
Soil - Concrete Interface Friction Angle	20°
Subgrade Modulus	200 psi/in
Soil Bearing Capacity	2000 PSF

This report is prepared solely for the use of BET's client and their various design professionals as an aid in project design and preparation of project plans and documents. Evaluations and recommendations presented herein are based on limited subsurface data derived from cores and test borings and without the knowledge of specific improvements proposed. Subsurface conditions not disclosed by the cores and borings performed may occur, and could influence construction of proposed improvements. Varying developmental schemes may alter the applicability of the evaluations and recommendations presented herein.

BET appreciates the opportunity to be of service, and trusts this report is complete and sufficient for your needs. However, if you should have any questions or if BET may be of further service, please do not hesitate to call.

Respectfully,

Bechtol Engineering and Testing, Inc.
Certificate of Authorization No. 00005492

L. Patel

Love B. Patel, MS, EI
Project Engineer

Thomas Bechtol, P.E.
President / Principal Engineer
Thomas Bechtol, P.E., State of Florida, Professional Engineer, License No. 38538
This item has been digitally signed and sealed by Thomas Bechtol, P.E. on the date indicated here. Printed copies of this document are not considered signed and sealed, and the signature must be verified on any electronic copies.

G17175 Geotechnical Report - FINAL 11-30-20.wpd

APPENDIX A

BORING LOCATION PLAN
SOIL PROFILES
SOIL & SYMBOL LEGEND

BORING LOCATION PLAN

SCALE: 1" = 200'

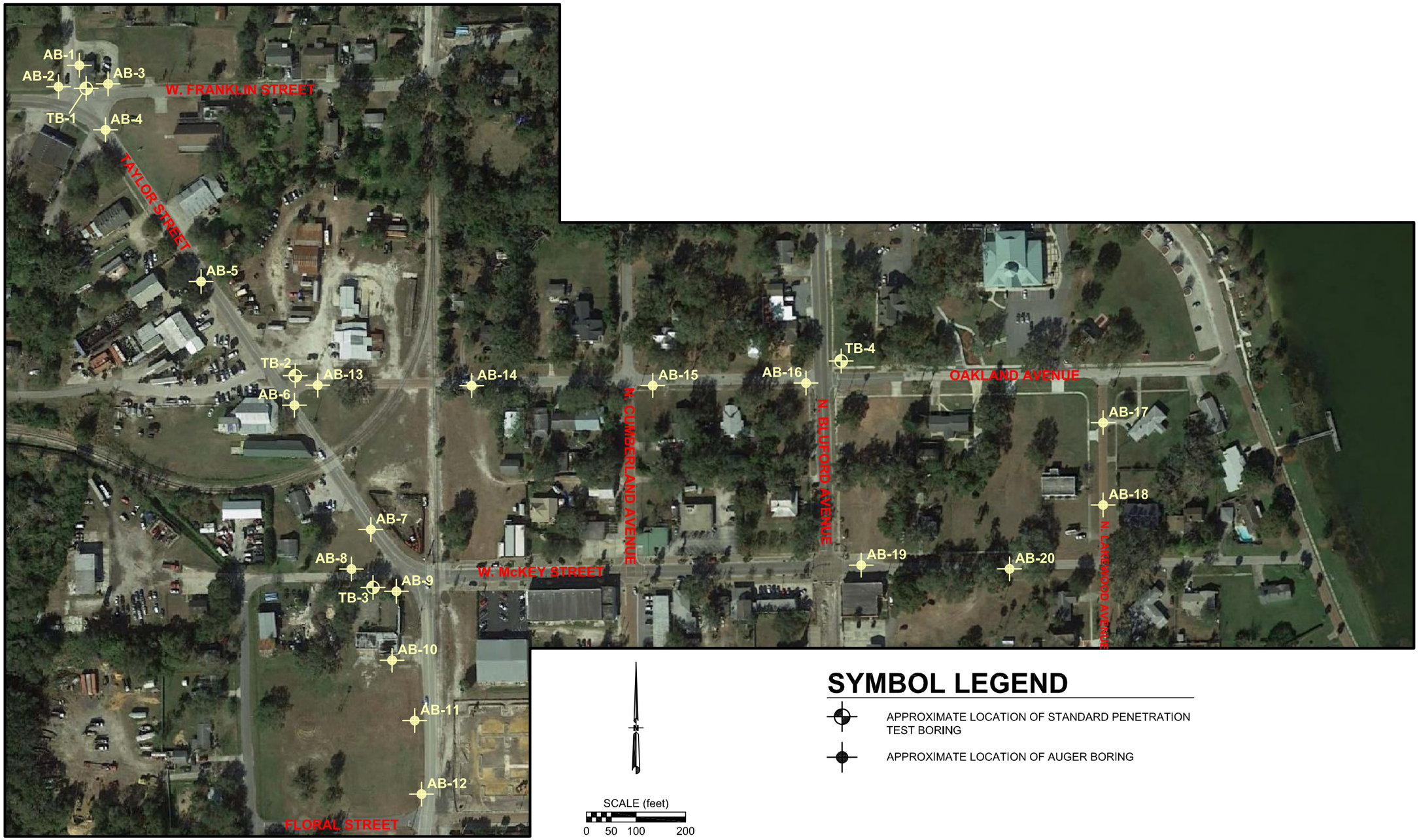

SYMBOL LEGEND

APPROXIMATE LOCATION OF STANDARD PENETRATION TEST BORING

APPROXIMATE LOCATION OF AUGER BORING

FIELD:	RK CT
DRAWN:	LP
CHECKED:	LP
APPROVED:	TB
DATE:	4/11/18
SCALE:	NOTED
PROJ. NO.:	G17175
	SHEET A1

GEOTECHNICAL SERVICES

DOWNTOWN OCOEE

ROADWAY IMPROVEMENTS

OCOEE, FLORIDA

BECHTOL ENGINEERING AND TESTING, inc.

CONSULTING GEOTECHNICAL, ENVIRONMENTAL, AND MATERIALS TESTING ENGINEERS

Certificate of Authorization No. 00005492

SOIL PROFILES

VERTICAL SCALE: 1" = 5'

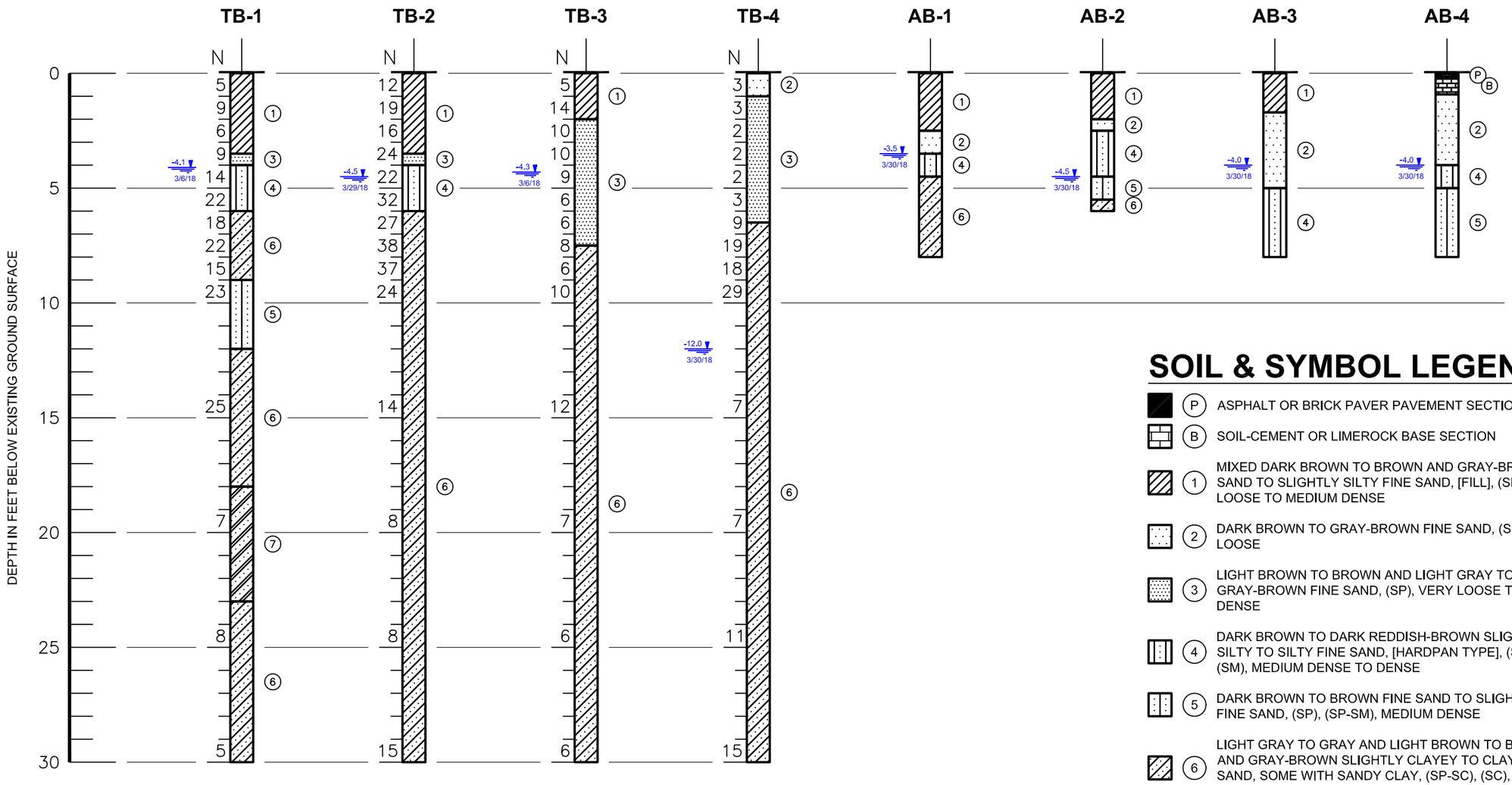

SOIL & SYMBOL LEGEND

(P)	ASPHALT OR BRICK PAVER PAVEMENT SECTION
(B)	SOIL-CEMENT OR LIMEROCK BASE SECTION
(1)	MIXED DARK BROWN TO BROWN AND GRAY-BROWN FINE SAND TO SLIGHTLY SILTY FINE SAND, [FILL], (SP), (SP-SM), LOOSE TO MEDIUM DENSE
(2)	DARK BROWN TO GRAY-BROWN FINE SAND, (SP), VERY LOOSE
(3)	LIGHT BROWN TO BROWN AND LIGHT GRAY TO LIGHT GRAY-BROWN FINE SAND, (SP), VERY LOOSE TO MEDIUM DENSE
(4)	DARK BROWN TO DARK REDDISH-BROWN SLIGHTLY SILTY TO SILTY FINE SAND, [HARDPAN TYPE], (SP-SM), (SM), MEDIUM DENSE TO DENSE
(5)	DARK BROWN TO BROWN FINE SAND TO SLIGHTLY SILTY FINE SAND, (SP), (SP-SM), MEDIUM DENSE
(6)	LIGHT GRAY TO GRAY AND LIGHT BROWN TO BROWN AND GRAY-BROWN SLIGHTLY CLAYEY TO CLAYEY FINE SAND, SOME WITH SANDY CLAY, (SP-SC), (SC), LOOSE TO DENSE
(7)	GRAY SANDY CLAY, (CL), MEDIUM
(SP)	UNIFIED SOIL CLASSIFICATION GROUP SYMBOL AS DETERMINED BY VISUAL EXAMINATION
-4.1 3/6/18	GROUNDWATER LEVEL, REFERENCED IN FEET TO EXISTING GROUND SURFACE, DATE OF READING
GNE 3/29/18	GROUNDWATER NOT ENCOUNTERED TO DEPTH OF BORING ON DATE NOTED
N	STANDARD PENETRATION RESISTANCE IN BLOWS PER FOOT

DATE:	4/11/18
SCALE:	NOTED
PROJ. NO.:	G17175
	SHEET A2
FIELD:	RK CT
DRAWN:	LP
CHECKED:	LP
APPROVED:	TB

GEOTECHNICAL SERVICES
DOWNTOWN OCOEE
ROADWAY IMPROVEMENTS
OCOEE, FLORIDA

BECHTOL ENGINEERING AND TESTING, inc.
CONSULTING GEOTECHNICAL, ENVIRONMENTAL, AND MATERIALS TESTING ENGINEERS
Certificate of Authorization No. 00005492

SOIL PROFILES

VERTICAL SCALE: 1" = 5'

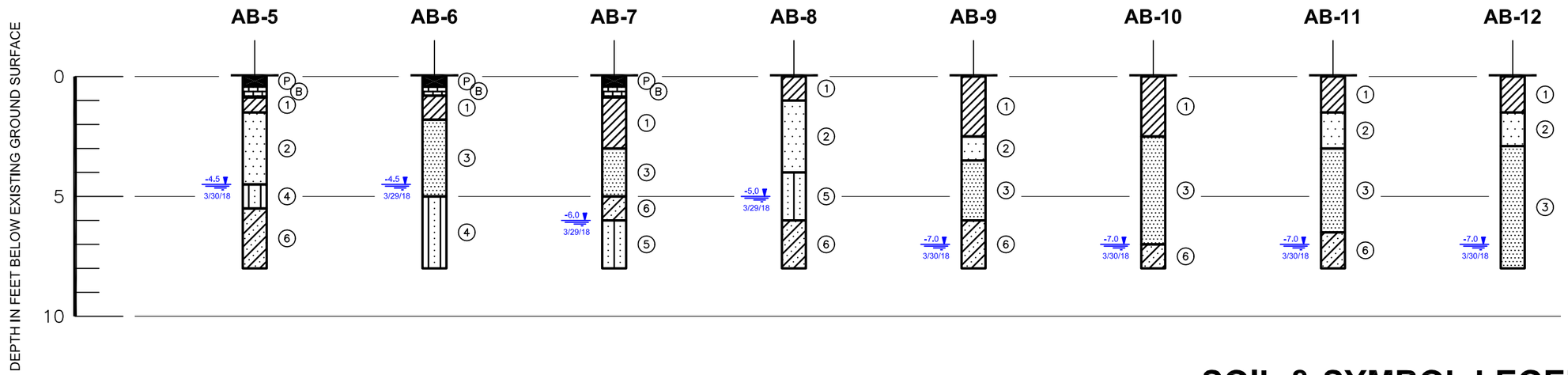

SOIL & SYMBOL LEGEND

(P)	ASPHALT OR BRICK PAVER PAVEMENT SECTION
(B)	SOIL-CEMENT OR LIMEROCK BASE SECTION
(1)	MIXED DARK BROWN TO BROWN AND GRAY-BROWN FINE SAND TO SLIGHTLY SILTY FINE SAND, [FILL], (SP), (SP-SM), LOOSE TO MEDIUM DENSE
(2)	DARK BROWN TO GRAY-BROWN FINE SAND, (SP), VERY LOOSE
(3)	LIGHT BROWN TO BROWN AND LIGHT GRAY TO LIGHT GRAY-BROWN FINE SAND, (SP), VERY LOOSE TO MEDIUM DENSE
(4)	DARK BROWN TO DARK REDDISH-BROWN SLIGHTLY SILTY TO SILTY FINE SAND, [HARDPAN TYPE], (SP-SM), (SM), MEDIUM DENSE TO DENSE
(5)	DARK BROWN TO BROWN FINE SAND TO SLIGHTLY SILTY FINE SAND, (SP), (SP-SM), MEDIUM DENSE
(6)	LIGHT GRAY TO GRAY AND LIGHT BROWN TO BROWN AND GRAY-BROWN SLIGHTLY CLAYEY TO CLAYEY FINE SAND, SOME WITH SANDY CLAY, (SP-SC), (SC), LOOSE TO DENSE
(7)	GRAY SANDY CLAY, (CL), MEDIUM
(SP)	UNIFIED SOIL CLASSIFICATION GROUP SYMBOL AS DETERMINED BY VISUAL EXAMINATION
-4.1 3/6/18	GROUNDWATER LEVEL, REFERENCED IN FEET TO EXISTING GROUND SURFACE, DATE OF READING
GNE 3/29/18	GROUNDWATER NOT ENCOUNTERED TO DEPTH OF BORING ON DATE NOTED
N	STANDARD PENETRATION RESISTANCE IN BLOWS PER FOOT

DATE:	4/11/18
SCALE:	NOTED
PROJ. NO.:	G17175
	SHEET A3
FIELD:	RK CT
DRAWN:	LP
CHECKED:	LP
APPROVED:	TB

GEOTECHNICAL SERVICES

DOWNTOWN OCOEE

ROADWAY IMPROVEMENTS
OCOEE, FLORIDA

BECHTOL ENGINEERING AND TESTING, inc.

CONSULTING GEOTECHNICAL, ENVIRONMENTAL, AND MATERIALS TESTING ENGINEERS
Certificate of Authorization No. 00005492

SOIL PROFILES

VERTICAL SCALE: 1" = 5'

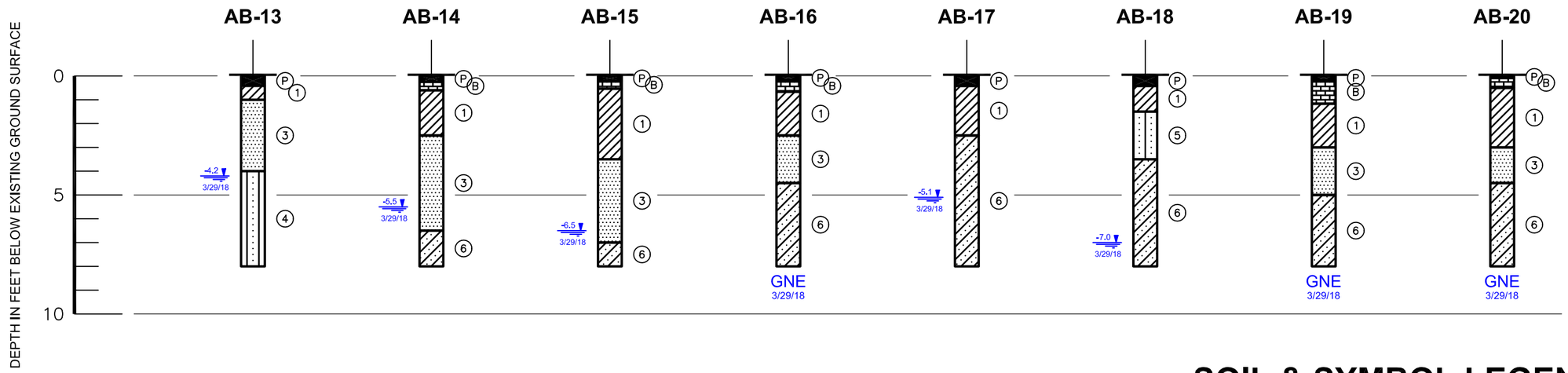

SOIL & SYMBOL LEGEND

P	ASPHALT OR BRICK PAVER PAVEMENT SECTION
B	SOIL-CEMENT OR LIMEROCK BASE SECTION
1	MIXED DARK BROWN TO BROWN AND GRAY-BROWN FINE SAND TO SLIGHTLY SILTY FINE SAND, [FILL], (SP), (SP-SM), LOOSE TO MEDIUM DENSE
2	DARK BROWN TO GRAY-BROWN FINE SAND, (SP), VERY LOOSE
3	LIGHT BROWN TO BROWN AND LIGHT GRAY TO LIGHT GRAY-BROWN FINE SAND, (SP), VERY LOOSE TO MEDIUM DENSE
4	DARK BROWN TO DARK REDDISH-BROWN SLIGHTLY SILTY TO SILTY FINE SAND, [HARDPAN TYPE], (SP-SM), (SM), MEDIUM DENSE TO DENSE
5	DARK BROWN TO BROWN FINE SAND TO SLIGHTLY SILTY FINE SAND, (SP), (SP-SM), MEDIUM DENSE
6	LIGHT GRAY TO GRAY AND LIGHT BROWN TO BROWN AND GRAY-BROWN SLIGHTLY CLAYEY TO CLAYEY FINE SAND, SOME WITH SANDY CLAY, (SP-SC), (SC), LOOSE TO DENSE
7	GRAY SANDY CLAY, (CL), MEDIUM
(SP)	UNIFIED SOIL CLASSIFICATION GROUP SYMBOL AS DETERMINED BY VISUAL EXAMINATION
-4.1 3/6/18	GROUNDWATER LEVEL, REFERENCED IN FEET TO EXISTING GROUND SURFACE, DATE OF READING
GNE 3/29/18	GROUNDWATER NOT ENCOUNTERED TO DEPTH OF BORING ON DATE NOTED
N	STANDARD PENETRATION RESISTANCE IN BLOWS PER FOOT

DATE:	4/11/18
SCALE:	NOTED
PROJ. NO.:	G17175
	SHEET A4
FIELD:	RK CT
DRAWN:	LP
CHECKED:	LP
APPROVED:	TB

GEOTECHNICAL SERVICES
DOWNTOWN OCOEE
ROADWAY IMPROVEMENTS
OCOEE, FLORIDA

BECHTOL ENGINEERING AND TESTING, inc.
CONSULTING GEOTECHNICAL, ENVIRONMENTAL, AND MATERIALS TESTING ENGINEERS
Certificate of Authorization No. 00005492

APPENDIX B

PRELIMINARY PAVEMENT SECTION RECOMMENDATIONS

APPENDIX B
PRELIMINARY PAVEMENT SECTION RECOMMENDATIONS

1.0 ASPHALT PAVEMENT

1.1 Surface Course

Surface course should consist of a minimum of 2 inches (compacted thickness) of asphalt conforming to FDOT specifications for Superpave 12.5 mm traffic level “C” asphaltic concrete, with PG76-22 Polymer Modified Binder.

1.2 Base Course

1.2.1 *Limerock*: Base course should consist of a minimum of 8 inches (8") (compacted thickness) of limerock (minimum LBR 100) compacted to minimum relative compaction of 98% of the material's Modified Proctor (ASTM D-1557, AASHTO T-180) laboratory maximum dry density. If limerock base is desirable, it is recommended that lowest finish pavement grade be set a minimum of 24 inches above estimated average seasonal high groundwater level.

1.2.2 *Crushed Concrete:* Base course should consist of a minimum of 8 inches (8") (compacted thickness) of crushed concrete (minimum LBR 130) compacted to a minimum relative compaction of 98% of the material's Modified Proctor (ASTM D-1557, AASHTO T-180) laboratory maximum dry density.

1.3 Stabilized Subgrade

Subbase should consist of a minimum of 8 inches (8") (compacted thickness) of granular fill or native subgrade soils mixed with a quantity of suitable stabilization material sufficient to achieve a minimum LBR of 40. Subbase should be compacted to minimum relative compaction of 98% of the material's Modified Proctor (ASTM D-1557, AASHTO T-180) laboratory maximum dry density.

2.0 CONCRETE PAVEMENT

2.1 Surface Course

Surface course should consist of a minimum of 7 inches (7") of concrete with a minimum 28-day compressive strength of 3,000 pounds per square inch (psi). Construction and contraction joints should be provided in general conformance to PCA guidelines.

2.2 Stabilized Subgrade

Subgrade should consist of a minimum of twelve inches (12") (compacted thickness) of granular fill or native soils mixed with a quantity of suitable stabilization material sufficient to achieve a minimum Limerock Bearing Ratio of 30% (LBR 30). Subgrade should be compacted to minimum relative compaction of 95% of the material's Modified Proctor (ASTM 0-1557, AASHTO T-180) laboratory maximum dry density.

W. OAKLAND AVENUE RECONSTRUCTION

CITY OF OCOEE,

ORANGE COUNTY, FL

CPH PROJECT No. 06012

Mayor: Rusty Johnson

Commissioner District 1: Scott R. Kennedy
Commissioner District 2: Rosemary Wilsen
Commissioner District 3: Richard Firstner
Commissioner District 4: Ages Hart

City Manager: Robert Frank

INDEX OF ROADWAY PLANS

SHEET NO.	DESCRIPTION
1	KEY SHEET
1A	SIGNATURE SHEET
2	SUMMARY OF PAY ITEMS
3 to 4	TYPICAL SECTION
5 to 6	SUMMARY OF DRAINAGE STRUCTURES
7	PROJECT LAYOUT
8	GENERAL NOTES
9 to 10	DEMO DETAIL SHEETS
11 to 16	PLAN & PROFILE
17 to 18	PLAN & PROFILE - CL TRAIL
19	PLAN SHEET - TAYLOR
20 to 21	GENERAL DETAIL SHEET
22	MEDIAN CROSSING DETAIL
23	IN-SITU INFILTROMETER DETAIL
24 to 27	CROSS SECTIONS
28 to 29	STORMWATER POLLUTION PREVENTION GENERAL NOTES
30	STORMWATER POLLUTION PREVENTION PLAN
S-1	SIGNING AND PAVEMENT MARKING GENERAL NOTES
S-2	SIGNING AND PAVEMENT MARKING PLANS
TCP-1	TRAFFIC CONTROL PLAN GENERAL NOTES
TCP-2 to TCP-5	TRAFFIC CONTROL PLANS
L-1 to L-7	LANDSCAPE PLANS
H-1 to H-5	HARDSCAPE PLANS
IR-1 to IR-6	IRRIGATION PLANS
U-1 to U-12	UTILITY PLANS

LIST OF REVISED INDEX DRAWINGS

REVISION NO.	SHEET NO.

END PROJECT
END CONSTRUCTION - OAKLAND AVE.
STA. 30+64.04 - ℄ SURVEY

END CONSTRUCTION
TAYLOR STREET
℄ SURVEY (TAYLOR) - STA. 609+13.36

STATION EQUATION
STA. 20+00.46 - ℄ SURVEY (OAKLAND)=
STA. 606+80.63 - ℄ SURVEY (TAYLOR)

BEGIN PROJECT
BEGIN CONSTRUCTION - OAKLAND AVE.
STA. 19+86.45 - ℄ SURVEY

BEGIN CONSTRUCTION
TAYLOR STREET
℄ SURVEY (TAYLOR) - STA. 605+71.24

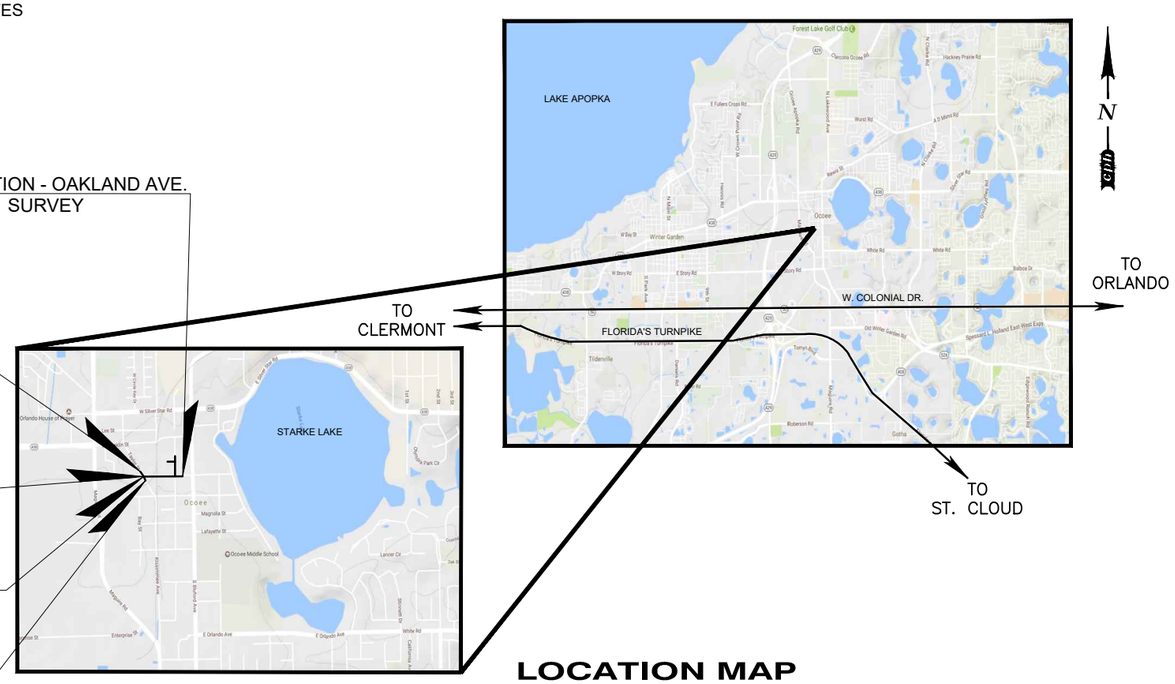

LOCATION MAP
N.T.S.

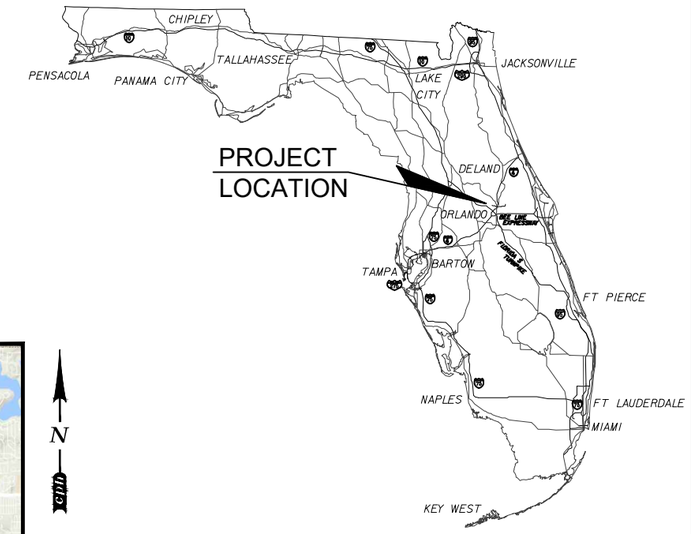

SHOP DRAWINGS TO BE SUBMITTED TO:
CITY OF OCOEE FLORIDA
301 MAGUIRE ROAD
OCOEE, FL 34761
PHONE: 407-905-3170

PLANS PREPARED BY:

Plans Prepared By:
CPH, Inc.
500 W. Fulton St., Sanford FL 32771
Ph: 407.322.6841
Licenses:
Eng. C.O.A. No. 3215 Arch. Lic. No. AA2600926
Survey L.B. No. 7143 Landscp. Lic. No. LC0000298

cph — A Full Service A & E Firm
Architects, Engineers, Environmental, Landscape Architects, M / E / P, Planners, Surveyors, Traffic/Transportation
www.cphcorp.com

PLANS PREPARED FOR:
CITY OF OCOEE FLORIDA
301 MAGUIRE ROAD
OCOEE, FL 34761
PHONE: 407-905-3170

LENGTH OF PROJECT		
	W. OAKLAND AVE.	
	LINEAR FEET	MILES
ROADWAY LENGTH		
W. OAKLAND AVENUE	1077.59	0.2041
TAYLOR STREET	342.12	0.0648
BRIDGES	N/A	N/A
NET LENGTH OF PROJECT	1419.71	0.2689
EXCEPTIONS	N/A	N/A
GROSS LENGTH OF PROJECT	1419.71	0.2689

REVISIONS		
BY	DATE	DESCRIPTION

FINAL PLANS
October 16, 2023

ROADWAY PLANS
ENGINEER OF RECORD:
JOSEPH M. LOFASO, P.E.
FL P.E. NO. 88718

Sunshine 811 — Always call 811 before you dig.

SHEET NO.
1

ATTENTION IS DIRECTED TO THE FACT THAT THESE PLANS MAY HAVE BEEN REDUCED IN SIZE BY REPRODUCTION. THIS MUST BE CONSIDERED WHEN OBTAINING SCALED DATA.

GOVERNING STANDARDS & SPECIFICATIONS: FLORIDA DEPARTMENT OF TRANSPORTATION, STANDARD PLANS FY 2023–24 AND STANDARD SPECIFICATIONS FOR ROAD AND BRIDGE CONSTRUCTION DATED FY 2023–24.

APPLICABLE DESIGN STANDARDS MODIFICATIONS: For Design Standards Modifications click on "Design Standards" at the following web site: http:/www.dot.state.fl.us/rddesign/

ALL CONSTRUCTION ACTIVITIES SHALL COMPLY WITH LATEST AMERICANS WITH DISABILITIES ACT (A.D.A.) STANDARDS FOR ACCESSIBLE DESIGN.(2010 STANDARDS)

THIS ITEM HAS BEEN DIGITALLY SIGNED AND SEALED BY JOSEPH M. LOFASO, ON THE DATE ADJACENT TO THE SEAL

PRINTED COPIES ARE NOT CONSIDERED SIGNED AND SEALED AND THE SIGNATURE MUST BE VERIFIED ON ANY ELECTRONIC COPIES.

CPH, LLC
500 WEST FULTON STREET
SANFORD, FLORIDA 32771
JOSEPH M. LOFASO, P.E. No. 88718

THE ABOVE NAMED PROFESSIONAL ENGINEER IS RESPONSIBLE FOR THE FOLLOWING SHEETS IN ACCORDANCE WITH RULE 61G15-23.004, F.A.C.

INDEX OF ROADWAY PLANS

SHEET NO.	DESCRIPTION
1	KEY SHEET
1A	SIGNATURE SHEET
2	SUMMARY OF PAY ITEMS
3 to 4	TYPICAL SECTION
5 to 6	SUMMARY OF DRAINAGE STRUCTURES
7	PROJECT LAYOUT
8	GENERAL NOTES
9 to 10	DEMO DETAIL SHEETS
11 to 16	PLAN & PROFILE
17 to 18	PLAN & PROFILE - CL TRAIL
19	PLAN SHEET - TAYLOR
20 to 21	GENERAL DETAIL SHEET
22	MEDIAN CROSSING DETAIL
23	IN-SITU INFILTROMETER DETAIL
24 to 27	CROSS SECTIONS
28 to 29	STORMWATER POLLUTION PREVENTION GENERAL NOTES
30	STORMWATER POLLUTION PREVENTION PLAN
S-1	SIGNING AND PAVEMENT MARKING GENERAL NOTES
S-2	SIGNING AND PAVEMENT MARKING PLANS
TCP-1	TRAFFIC CONTROL PLAN GENERAL NOTES
TCP-2 to TCP-5	TRAFFIC CONTROL PLANS

THIS ITEM HAS BEEN DIGITALLY SIGNED AND SEALED BY JAMES K. WINTER, ON THE DATE ADJACENT TO THE SEAL.

PRINTED COPIES OF THIS DOCUMENT ARE NOT CONSIDERED SIGNED AND SEALED AND THE SIGNATURE MUST BE VERIFIED ON ANY ELECTRONIC COPIES.

CPH, LLC
500 W. FULTON STREET
SANFORD, FL 32771
JAMES K. WINTER, RLA, LA0000911

THE ABOVE NAMED REGISTERED LANDSCAPE ARCHITECT SHALL BE RESPONSIBLE FOR THE FOLLOWING SHEETS IN ACCORDANCE WITH RULE 61G10-11.011, F.A.C.

INDEX OF ROADWAY PLANS

SHEET NO.	DESCRIPTION
1A	SIGNATURE SHEET
L-1 to L-7	LANDSCAPE PLANS
H-1 to H-5	HARDSCAPE PLANS
IR-1 to IR-6	IRRIGATION PLANS

THIS ITEM HAS BEEN DIGITALLY SIGNED AND SEALED BY WILLIE E. THOMAS, ON THE DATE ADJACENT TO THE SEAL

PRINTED COPIES ARE NOT CONSIDERED SIGNED AND SEALED AND THE SIGNATURE MUST BE VERIFIED ON ANY ELECTRONIC COPIES.

BARNES, FERLAND AND ASSOCIATES, INC.
1230 HILLCREST STREET
ORLANDO, FLORIDA 32803
WILLIE E. THOMAS, P.E. No. 57612

THE ABOVE NAMED PROFESSIONAL ENGINEER IS RESPONSIBLE FOR THE FOLLOWING SHEETS IN ACCORDANCE WITH RULE 61G15-23.004, F.A.C.

INDEX OF ROADWAY PLANS

SHEET NO.	DESCRIPTION
1A	SIGNATURE SHEET
U-1 to U-12	UTILITY PLANS

SUMMARY OF PAY ITEMS

OAKLAND AVENUE

P.I. LINE NO.	FDOT PAY ITEM NO.	PAY ITEM DESCRIPTION	UNIT	QUANTITY	
				PLAN	FINAL
1	1.01	MOBILIZATION	LS	1	
2	1.02	MAINTENANCE OF TRAFFIC	LS	1	
3	1.03	SEDIMENT BARRIER	LF	1,678	
4	1.04	INLET PROTECTION SYSTEM	EA	5	
5	1.05	CLEARING & GRUBBING	AC	1.87	
6	1.06	REMOVAL OF EXISTING CONCRETE	SY	978	
7	1.07	MAILBOX, RELOCATE	EA	14	
8	1.08	WEIGH SCALE REMOVAL & RESTORATION	LS	1	
9	1.09	REGULAR EXCAVATION	CY	2,179	
10	1.10	EMBANKMENT	CY	195	
11	1.11	TYPE B STABILIZATION (LBR40) (12")	SY	4,050	
12	1.12	OPTIONAL BASE GROUP 09 CRUSHED CONC. (10")	SY	3,205	
13	1.13	MILLING EXISTING ASPHALT PAVEMENT, 1" AVG DEPTH	SY	207	
14	1.14	SUPERPAVE ASHPALT CONC. TRAFFIC C, 1"	TN	11	
15	1.15	SUPERPAVE ASHPALT CONC. TRAFFIC C, 2"	TN	291	
16	1.16	INLETS, CURB, TYPE 9, P BOT <10'	EA	8	
17	1.17	INLETS, CURB, TYPE 9, J BOT, <10'	EA	1	
18	1.18	INLETS, CURB, TYPE 9, PARTIAL	EA	1	
19	1.19	INLETS, VALLEY GUTTER, P BOTTOM <10'	EA	6	
20	1.20	INLETS, VALLEY GUTTER, PARTIAL	EA	2	
21	1.21	MANHOLES, J-8, <10'	EA	3	
22	1.22	MANHOLE, ADJUST	EA	3	
23	1.23	PIPE CULVERT, RCP, ROUND, 24" S/CD	LF	1,133	
24	1.24	PIPE CULVERT, RCP, ROUND, 30" S/CD	LF	204	
25	1.25	PIPE CULVERT, RCP, OTHER SHAPE - ELIP/ARCH, 34"X53" S/CD	LF	78	
26	1.26	CURB AND GUTTER, TYPE F	LF	1,069	
27	1.27	CURB AND GUTTER, TYPE F, DROP CURB	LF	681	
28	1.28	CONCRETE CURB, TYPE B	LF	1,798	
29	1.29	CONCRETE CURB, TYPE D	LF	711	
30	1.30	CONCRETE, SIDEWALK, CURB RAMP, 4" THICK	SY	1,858	
31	1.31	CONCRETE, DRIVEWAYS, TRAIL, SEATING PADS, 6" THICK	SY	1,500	
32	1.32	PAVERS, ARCHITECTURAL, ROADWAY	SY	701	
33	1.33	DETECTABLE WARNINGS	SF	416	
34	1.34	BEDDING STONE (15", NO. 57 STONE)	TN	453	
35	1.35	PERFORMANCE TURF, SOD	SF	6,436	
36	1.36	SINGLE POST SIGN, F&I, GM, 12-20 SF	AS	10	
37	1.37	PAINTED PAVEMENT MARKINGS, FINAL SURFACE	LS	1	
38	1.38	THERMOPLASTIC, STD, WHITE, SOLID, 12"	LF	48	
39	1.39	THERMOPLASTIC, STD, WHITE, SOLID, 24"	LF	104	
40	1.40	THERMOPLASTIC, STD, WHITE, MESSAGE	EA	2	
41	1.41	THERMOPLASTIC, STD, OPEN GRADED, WHITE, SOLID, 6"	GM	0.0352	
42	1.42	THERMOPLASTIC, STD, OPEN GRADED, YELLOW, SOLID, 6"	GM	0.0112	

SUMMARY OF PAY ITEMS

OAKLAND AVENUE

P.I. LINE NO.	FDOT PAY ITEM NO.	PAY ITEM DESCRIPTION	UNIT	QUANTITY	
				PLAN	FINAL
		UTILITIES			
43	2.01	REMOVE EXISTING 2" PIPE	LF	330	
44	2.02	REMOVE EXISTING 3" PIPE	LF	105	
45	2.03	REMOVE EXISTING 6" PIPE	LF	1125	
46	2.04	2" PE WATER MAIN	LF	30	
47	2.05	4" DI WATER MAIN	LF	295	
48	2.06	6" DI WATER MAIN	LF	580	
49	2.07	8" DI WATER MAIN	LF	382	
50	2.08	GATE VALVE WITH BOX (6")	EA	5	
51	2.09	GATE VALVE WITH BOX (8")	EA	3	
52	2.10	TAPPING SLEEVE AND VALVE ASSEMBLY (2")	EA	1	
53	2.11	TAPPING SLEEVE AND VALVE ASSEMBLY (6")	EA	2	
54	2.12	CUT-IN CONNECTION TO EXISTING WATER MAIN	EA	8	
55	2.13	LINE STOP ASSEMBLY (6")	EA	2	
56	2.14	2" BLOW OFF ASSEMBLY	EA	1	
57	2.15	OFFSET AIR RELEASE VALVE ASSEMBLY (2" DIAMETER)	EA	2	
58	2.16	REMOVE AND SALVAGE FIRE HYDRANT	EA	3	
59	2.17	CLOSE, PLUG, AND ABANDON EXISTING 3" GATE VALVE	EA	1	
60	2.18	1" WATER SERVICE CONNECTION	EA	12	
61	2.19	8" PVC SAN SEWER (0-6 FT. DEEP)	LF	308	
62	2.20	4' DIA. SAN SEWER MANHOLE (0-6 FT. DEEP)	EA	1	
63	2.21	SINGLE LATERAL SERVICE (0-8 FT DEEP)	EA	9	
		LANDSCAPE & HARDSCAPE			
64	3.01	DECORATIVE WALL, F&I, COMPLETE	EA	2	
65	3.02	DECORATIVE COLUMN, F&I, COMPLETE	EA	4	
66	3.03	DECORATIVE BENCHES, F&I, COMPLETE	EA	8	
67	3.04	CONCRETE RIBBON CURB	LF	313	
68	3.05	LANDSCAPE IRRIGATION SYSTEM, F&I, COMPLETE	EA	1	
69	3.06	MULCH	CY	92	
70	3.07	TREE ROOT BARRIER	LF	2192	
71	3.08	CRAPE MYRTLE	EA	23	
72	3.09	HIGHRISE LIVE OAK	EA	11	
73	3.10	CABBAGE PALM	EA	22	
74	3.11	FIREFLY FIREBUSH	EA	232	
75	3.12	MRS SCHILLERS VIBURNUM	EA	98	
76	3.13	BABY PETE AGAPANTHUS	EA	1749	
77	3.14	MUHLY GRASS	EA	327	
78	3.15	POWDERPUFF MIMOSA	EA	1802	
79	3.16	PEACH DRIFT ROSE	EA	180	

PAY ITEM NOTES

1.32: COST OF THE IN-SITU INFILTROMETER (QUANTITY: 6) SHALL BE INCLUDED WITH THE COST OF THE PAVERS.

1.34: COST OF COMPACTED SUB-GRADE SHALL BE INCLUDED WITH THE COST OF THE BEDDING STONE.

1.34: COST OF NON-WOVEN GEOTEXTILE FABRIC SHALL BE INCLUDED WITH THE COST OF THE BEDDING STONE.

1.37: FOR ALL TEMPORARY PAVEMENT PAINTED MARKINGS USED DURING CURING PERIOD PRIOR TO APPLICATION OF THERMOPLASTIC MARKINGS

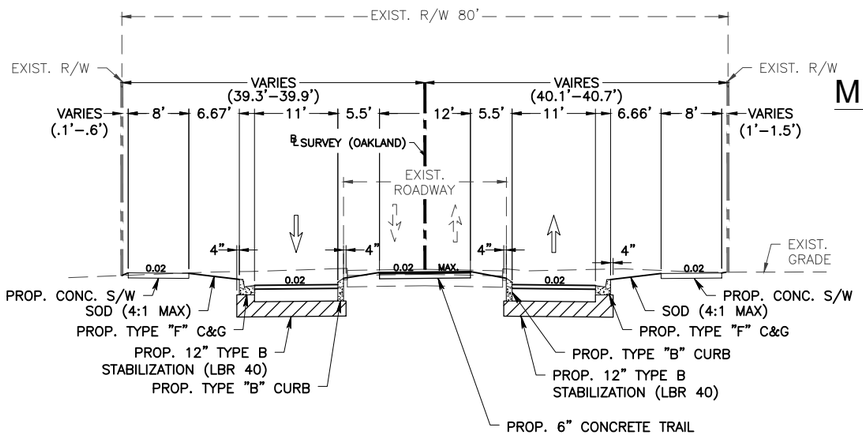

MILL & RESURFACE - ROADWAY

MILL (1") RESURFACE WITH
TYPE SP-9.5 ASPHALT CONCRETE (1") TRAFFIC C

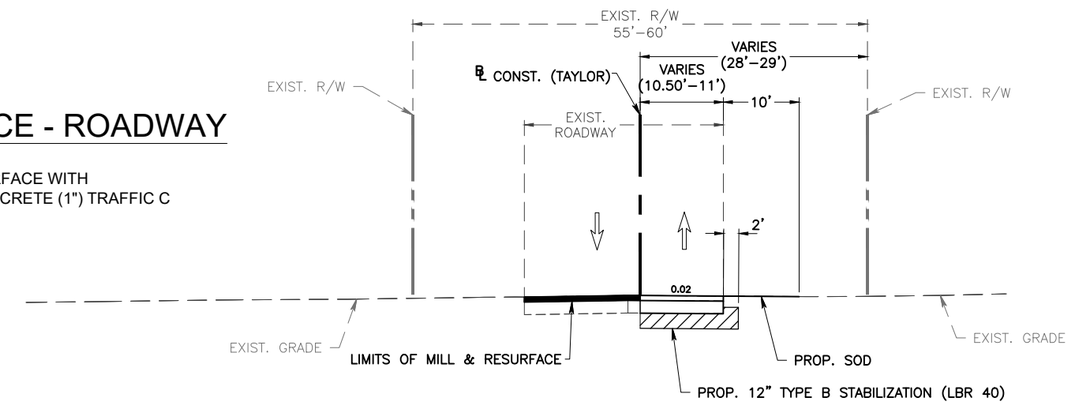

Typical Section - Oakland Ave.

STA. 19+86.45 to STA. 30+64.04

NEW CONSTRUCTION - ROADWAY

TYPE SP-9.5 ASPHALT CONCRETE (2") TRAFFIC C)
OPTIONAL BASE GROUP 09 (10")
TYPE B STABILIZATION (LBR 40) (12")

Typical Section - Taylor Street

STA. 605+71.24 to STA. 609+13.36

No.	Date	Revision	By	No.	Date	Revision	By
1				4			
2				5			
3				6			

cph — www.cphcorp.com

A Full Service A & E Firm: Architects, Engineers, Environmental, Landscape Architects, M/E/P, Planners, Surveyors, Traffic/Transportation

Offices In: • Florida • Puerto Rico • Connecticut • Maryland • Texas

Designed by:	CJT	Date: 10/16/2023
Drawn by:	AM/CJT	Scale: AS NOTED
Checked by:	KRL	
Approved by:	JML	
Job No.	O6012	©2023

Oakland Ave.
City of Ocoee, Florida

Plans Prepared By:
CPH, Inc.
500 W. Fulton St. Sanford, FL 32771
Ph: 407.322.6841
Licenses:
Eng. C.O.A. No. 3215 *Arch. Lic. No. AA2600926*
Survey L.B. No. 7143 *Landscp. Lic. No. LC0000298*

JOSEPH M LOFASO, P.E.
FL P.E. No. 88718

Typical Sections

Sheet No. ***3***

Drawing name: J:\O6012\Roadway\Roadway\TYPRD01.dwg Oct 16, 2023 - 9:43am jlofaso

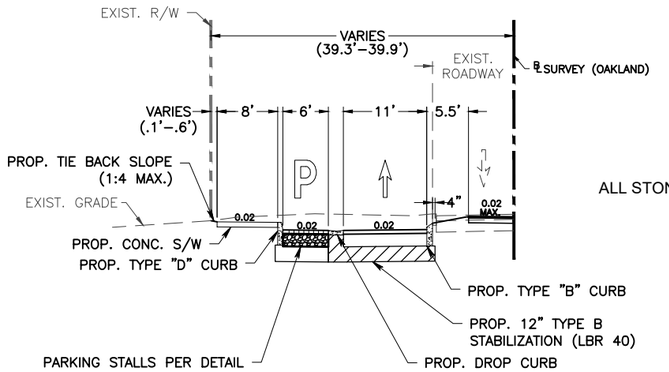

Typical Section - Parking Left

Sta. 23+43.01 to Sta. 24+28.90
Sta. 27+70.09 to Sta. 26+31.97
Sta. 28+28.83 to Sta. 30+10.72

PARKING STALLS

2-1/4" HOLLAND-STONE PAVERS
(90° HERRINGBONE PATTERN, BISCAYNE AND RUSTIC BAY COLOR MIX)
BEDDING SAND (2")
15" COMPACTED #57 STONE
ALL STONE TO BE WRAPPED IN NON-WOVEN GEOTEXTILE FABRIC PER MANUFACTURE'S SPECIFICATIONS
12" COMPACTED SUB-GRADE (MAX. COMPACTION 92%-95% MODIFIED PROCTOR)

NEW CONSTRUCTION - ROADWAY

TYPE SP-9.5 ASPHALT CONCRETE (2") TRAFFIC C)
OPTIONAL BASE GROUP 09 (10")
TYPE B STABILIZATION (LBR 40) (12")

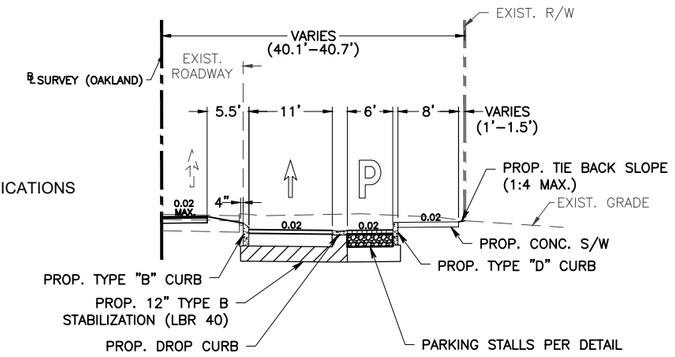

Typical Section - Parking Right

Sta. 23+53.38 to Sta. 25+11.46
Sta. 27+56.20 to Sta. 28+42.61
Sta. 28+96.61 to Sta. 30+07.11

PARKING STALL DETAIL

NOT TO SCALE

(MIRROR FOR RIGHT SIDE C&G)

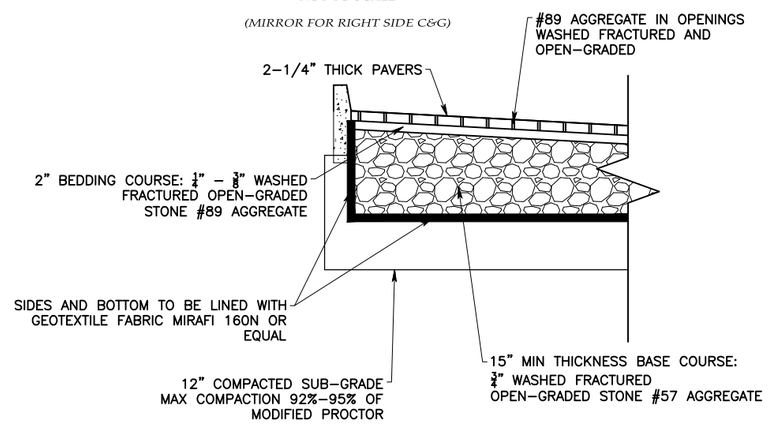

No.	Date	Revision	By	No.	Date	Revision	By
1				4			
2				5			
3				6			

cph — www.cphcorp.com

A Full Service A & E Firm
Architects *M/E/P*
Engineers *Planners*
Environmental *Surveyors*
Landscape Architects *Traffic/Transportation*

Offices In:
- *Florida*
- *Puerto Rico*
- *Connecticut*
- *Maryland*
- *Texas*

Designed by:	CJT	Date: 10/16/2023
Drawn by:	AM/CJT	Scale: AS NOTED
Checked by:	KRL	
Approved by:	JML	
Job No.	O6012	©2023

Oakland Ave.
City of Ocoee, Florida

Plans Prepared By:
CPH, Inc.
500 W. Fulton St. Sanford, FL 32771
Ph: 407.322.6841
Licenses:
Eng. C.O.A. No. 3215 *Arch. Lic. No. AA2600926*
Survey L.B. No. 7143 *Landscp. Lic. No. LC0000298*

JOSEPH M LOFASO, P.E.
FL P.E. No. 88718

Typical Sections

Sheet No.
4

Drawing name: J:\O6012\Roadway\Roadway\TYPRD01.dwg Oct 16, 2023 - 9:43am jlofaso

SUMMARY OF DRAINAGE STRUCTURES

STRUCTURE NUMBER		STATION BASELINE CONST.	OFFSET	DESCRIPTION	EOP, GRATE, OR TOP	BARRELS	PIPE SIZE	DIRECTION	INVERTS	STORM DRAIN (RCP) ROUND 24"	STORM DRAIN (RCP) ROUND 30"	STORM DRAIN (RCP) ELLIPTICAL 34"x 53"	INLETS CURB TYPE 9 P-BOTTOM<10'	INLETS CURB TYPE 9 J-BOTTOM<10'	INLETS CURB TYPE 9 PARTIAL	INLETS CURB VALLEY GUTTER P-BOTTOM<10'	INLETS CURB VALLEY GUTTER PARTIAL	MANHOLES TYPE 8 J-BOTTOM<10'	REMARKS
										LF	LF	LF	EA	EA	EA	EA	EA	EA	
P	S-98	609+03.75	13.39' RT	MANHOLE	117.26'	3	36"X48" BOX (EXIST.)	NE	110.50'									1	INDEX 425-001, 425-010 J - BOTTOM (6' X 6') CONST. OVER EXIST CULVERT CAST IN PLACE
							36"X48" BOX (EXIST.)	SW	110.50'										
							30"	SE	110.50'										
F																			
P	S-99	20+01.23	23.50' LT	MANHOLE	117.32'	3	30"	NW	111.12'		204							1	INDEX 425-001, 425-010 J - BOTTOM ALT-A BOTTOM (7' DIAMETER) (BRICK UP WEST BARREL)
							24"	E	112.54'										
							18"	W	111.12'										
F																			
P	S-100	21+15.51	23.50' RT	CURB INLET TYPE 9	118.39'	1	24"	N	113.24'	47			1						INDEX 430-001, 425-024
F																			
P	S-101	21+15.50	23.50' LT	CURB INLET TYPE 9	117.67'	3	24"	S	113.09'				1						INDEX 430-001, 425-024
							24"	E	112.88'	80									
							24"	W	112.88'	114									
F																			
P	S-102	21+95.51	23.50' RT	CURB INLET TYPE 9	119.32'	1	24"	N	113.95'	47			1						INDEX 425-001, 425-024
F																			
P	S-103	21+95.50	23.50' LT	CURB INLET TYPE 9	118.68'	2	24"	S	113.80'				1						INDEX 425-001, 425-024
							24"	W	113.12'										
F																			
P	S-104	23+99.98	23.50' RT	VALLEY GUTTER INLET	119.32'	1	24"	E	112.26'	90						1			INDEX 425-001. CITY DETAIL
F																			
P	S-105	23.99.92	23.50' LT	VALLEY GUTTER INLET	119.10"	1	24"	E	112.26'	90						1			INDEX 425-001, CITY DETAIL
F																			
P	S-106	24+90.00	23.50' RT	VALLEY GUTTER INLET	118.55'	2	24"	E	111.95'	90						1			INDEX 425-001, CITY DETAIL
							24"	W	111.95'										
F																			
P	S-107	24+89.93	23.50' LT	CURB INLET TYPE 9	118.21'	2	24"	E	111.95'	90			1						INDEX 425-001, 425-024
							24"	W	111.95'										
F																			
P	S-108	25+80.00	23.50' RT	CURB INLET TYPE 9	117.78'	2	24"	SE	110.68'	113			1						INDEX 425-001, 425-024 ROUND BOTTOM (4' DIAMETER)
							24"	W	111.68'										
F																			
P	S-109	25+79.93	23.50' LT	VALLEY GUTTER INLET	117.59'	2	24"	E	111.68'	112						1			INDEX 425-001, CITY DETAIL
							24"	W	111.68'										
F																			
									SHEET TOTAL	873	204	0	6	0	0	4	0	2	

No.	Date	Revision	By	No.	Date	Revision	By
1				1			
2				2			
3				3			
4				4			

cph www.cphcorp.com

A Full Service A & E Firm
Architects M/E/P
Engineers Planners
Environmental Surveyors
Landscape Architects Traffic/Transportation

Offices In:
• Florida
• Puerto Rico
• Connecticut
• Maryland
• Texas

Designed by:	CJT	Date: 10/16/2023
Drawn by:	AM/CJT	Scale: AS NOTED
Checked by:	KRL	
Approved by:	JML	
Job No.	O6012	©2023

Oakland Ave.
City of Ocoee, Florida

Plans Prepared By:
CPH, Inc.
500 W. Fulton St. Sanford, FL 32771
Ph: 407.322.6841
Licenses:
Eng. C.O.A. No. 3215 Arch. Lic. No. AA26000926
Survey L.B. No. 7143 Landscp. Lic. No. LC0000298

JOSEPH M LOFASO, P.E.
FL P.E. No. 88718

Summary of Drainage Structures

Sheet No. 5

Drawing name: J:\O6012\Roadway\Drainage\SUMDRB01.dwg Oct 16, 2023 - 9:43am jlofaso

SUMMARY OF DRAINAGE STRUCTURES

STRUCTURE NUMBER		STATION BASELINE CONST.	OFFSET	DESCRIPTION	EOP, GRATE, OR TOP	BARRELS	PIPE SIZE	DIRECTION	INVERTS	STORM DRAIN (RCP) ROUND 24"	STORM DRAIN (RCP) ROUND 30"	STORM DRAIN (RCP) ELLIPTICAL 34"x 53"	INLETS CURB TYPE 9 P-BOTTOM<10'	INLETS CURB TYPE 9 J-BOTTOM<10'	INLETS CURB TYPE 9 PARTIAL	INLETS CURB VALLEY GUTTER P-BOTTOM<10'	INLETS CURB VALLEY GUTTER PARTIAL	MANHOLES TYPE 8 J-BOTTOM<10'	MANHOLES ADJUST	REMARKS
										LF	LF	LF	EA	EA	EA	EA	EA	EA	EA	
P	X-1	26+92.22	24.06' LT	MANHOLE	116.80'	4	60" (EXIST.)	N	108.88'										1	ADJUST EXISTING MANHOLE TOP CONNECT PROPOSED PIPES TO STRUCTURE BOTTOM. INDEX 425-001, CITY DETAIL
							34"x53"	S	108.88'											
							36" (EXIST.)	E	111.34'											
							24"	W	111.34'											
F																				
P	S-110	26+79.78	53.95' RT	CURB INLET TYPE 9	117.66'	1	24"	E	112.10'	11			1							INDEX 425-001, 425-024
F																				
P	S-111	26+91.56	44.36' RT	MANHOLE	117.68'	4	34"x53"	N	108.92'			68						1		INDEX 425-001, INDEX 425-010 J - BOTTOM (8' X5')
							34"x53"	S	108.92'											
							24"	E	110.34'											
							24"	W	110.34'											
F																				
P	S-112	27+03.00	53.89' RT	CURB INLET TYPE 9	117.77'	4	34"x53"	N	108.97'			10								INDEX 425-001, INDEX 425-010 J-BOTTOM (4'X16') ALT. B BOTTOM CAST-IN-PLACE OVER EXIST. 18" PIPE BRICK UP 34"X53" SOUTH BARREL
							34"x53"	S	108.97'											
							18" (EXIST.)	S	111.67'					1						
							24"	W	112.00'											
F																				
P	X-2	27+64.18	23.53' LT	CURB INLET TYPE 9	116.29'	3	36" (EXIST.)	E	110.39'						1					REPLACE EXIST. MANHOLE TOP INDEX 425-001, 425-024
							36" (EXIST.)	W	110.39'											
F																				
P	S-113	27+82.02	23.44' RT	VALLEY GUTTER INLET	117.09'	2	24"	E	110.62'							1				INDEX 425-001, CITY DETAIL ROUND BOTTOM (4' DIAMETER)
							24"	SW	110.62'	93										
F																				
P	X-3	28+47.80	23.50' LT	VALLEY GUTTER INLET	116.54'	2	36" (EXIST.)	E	110.44'								1			REPLACE E XISTING MANHOLE TOP INDEX 425-001, CITY DETAIL
							36" (EXIST.)	W	110.44'											
F																				
P	S-114	28+47.89	23.50' RT	CURB INLET TYPE 9	117.20'	2	24"	E	110.82'				1							INDEX 425-001, 425-024
							24"	W	110.82'	66										
F																				
P	X-4	29+37.90	23.50' LT	VALLEY GUTTER INLET	116.81'	2	36" (EXIST.)	E	110.50'								1			REPLACE EXISTING MANHOLE TOP INDEX 425-001, CITY DETAIL
							36" (EXIST.)	W	110.50'											
F																				
p	S-115	29+37.90	23.50' RT	VALLEY GUTTER INLET	117.00'	1	24"	W	111.09'	90						1				INDEX 425-001, CITY DETAIL
F																				
P	X-5	29+80.83	23.50' LT	MANHOLE	117.00'	2	36" (EXIST.)	E	111.68'										1	ADJUST EXISTING MANHOLE TOP INDEX 425-001
							36" (EXIST.)	W	110.68'											
F																				
P	X-7	30+26.10	4.66' LT	MANHOLE	116.98'	3	18" (EXIST.)	N	110.55'										1	ADJUST EXISTING MANHOLE TOP INDEX 425-001
							18" (EXIST.)	E	109.63'											
							18" (EXIST.)	S	110.55'											
F																				
									SHEET TOTAL	260	0	78	2	1	1	2	2	1	3	
									PROJECT TOTAL	1133	204	78	8	1	1	6	2	3	3	

No.	Date	Revision	By	No.	Date	Revision	By
1				1			
2				2			
3				3			
4				4			

cph www.cphcorp.com

A Full Service A & E Firm
Architects, Engineers, Environmental, Landscape Architects, M/E/P, Planners, Surveyors, Traffic/Transportation

Offices In: • Florida • Puerto Rico • Connecticut • Maryland • Texas

Designed by:	CJT	Date: 10/16/2023
Drawn by:	AM/CJT	Scale: AS NOTED
Checked by:	KRL	
Approved by:	JML	
Job No.	O6012	©2023

Oakland Ave.
City of Ocoee, Florida

Plans Prepared By: CPH, Inc. 500 W. Fulton St. Sanford, FL 32771 Ph: 407.322.6841 Licenses: Eng. C.O.A. No. 3215 Arch. Lic. No. AA26000926 Survey L.B. No. 7143 Landscp. Lic. No. LC0000298

JOSEPH M LOFASO, P.E.
FL P.E. No. 88718

Summary of Drainage Structures

Sheet No. 6

Drawing name: J:\O6012\Roadway\Drainage\SUMDRRD01.dwg Oct 16, 2023 - 9:43am jlofaso

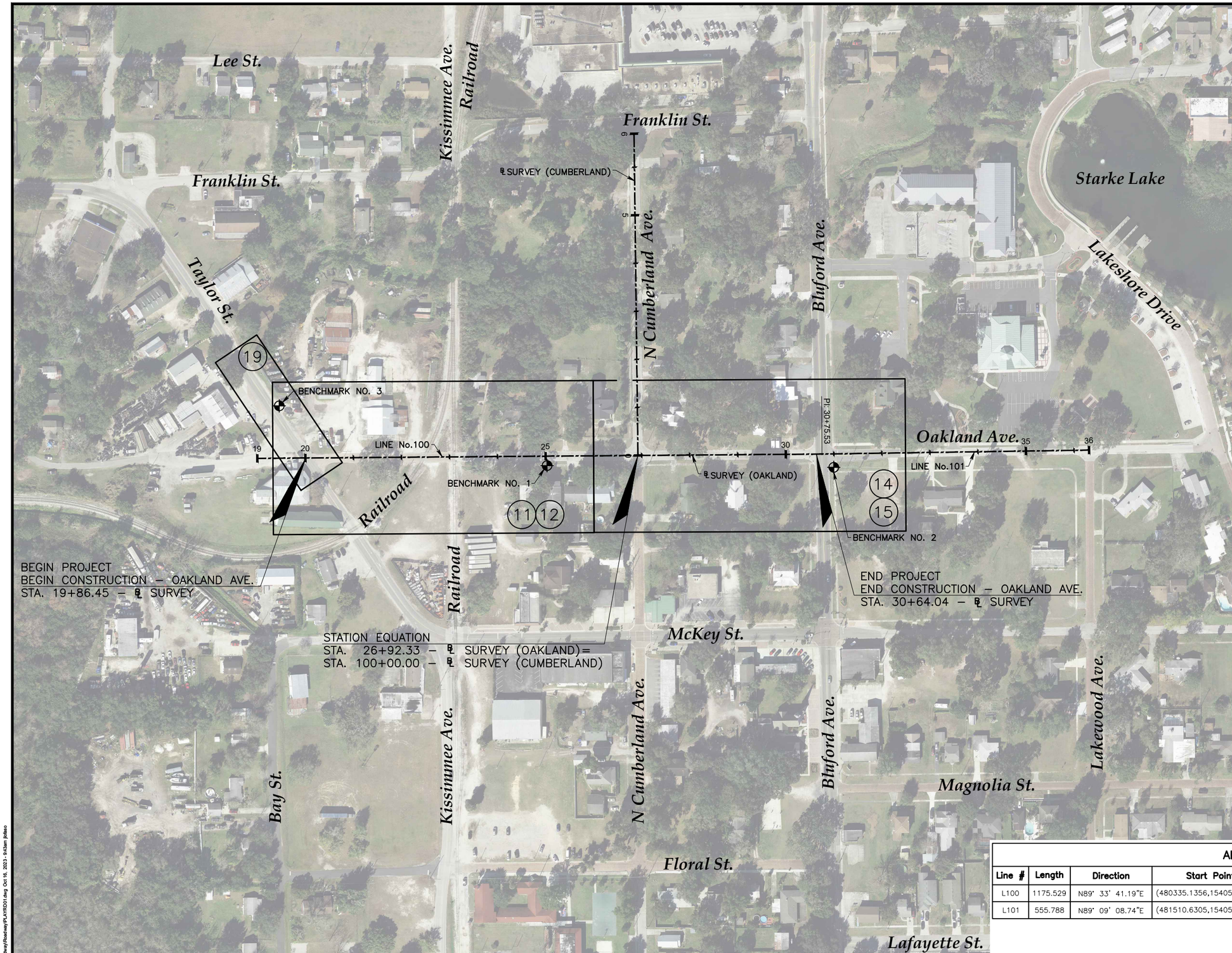

GRAPHIC SCALE

100 0 50 100 200

(IN FEET)

N

SITE BENCH MARKS

NO. 1 – STA. 25+02.85, 18.38' RT ℄ SURVEY (OAKLAND)
ELEV. 119.86 (NAVD '88)
PK BENCHMARK NAIL & DISK LB# 7143
DESC. TOP OF NAIL
NORTHING: 1540511.71
EASTING: 480938.09

NO. 2 – STA. 30+99.36, 28.01' RT ℄ SURVEY (OAKLAND)
ELEV. 117.31' (NAVD '88)(NGVD '29)
PK BENCHMARK NAIL & DISK LB# 7143
DESC. TOP OF NAIL
NORTHING: 1540508.10
EASTING: 481534.86

NO. 3 – STA. 13+75.58, 16.12' RT ℄ SURVEY (TAYLOR)
ELEV = 117.54 (NAVD '88)
PK BENCHMARK NAIL & DISK LB #7143
DESC. TOP OF NAIL
NORTHING: 1540635.79
EASTING: 480380.71

ALIGNMENT DATA

Line #	Length	Direction	Start Point	End Point	Start Station	End Station
L100	1175.529	N89° 33' 41.19"E	(480335.1356,1540526.4263)	(481510.6305,1540535.4240)	19+00.00	30+75.53
L101	555.788	N89° 09' 08.74"E	(481510.6305,1540535.4240)	(482066.3577,1540543.6455)	30+75.53	36+31.32

No.	Date	Revision	By	No.	Date	Revision	By
1				5			
2				6			
3				7			
4				8			

cph
www.cphcorp.com

A Full Service A & E Firm
Architects M/E/P
Engineers Planners
Environmental Surveyors
Landscape Architects Traffic/Transportation

Offices In:
• Florida
• Puerto Rico
• Connecticut
• Maryland
• Texas

Designed by:	CJT	Date: 10/16/2023
Drawn by:	AM/CJT	Scale: AS NOTED
Checked by:	KRL	
Approved by:	JML	
Job No.	O6012	©2023

Oakland Ave.
City of Ocoee, Florida

Plans Prepared By:
CPH, Inc.
500 W. Fulton St. Sanford, FL 32771
Ph: 407.322.6841
Licenses:
Eng. C.O.A. No. 3215 Arch. Lic. No. AA2600926
Survey L.B. No. 7143 Landscp. Lic. No. LC0000298

JOSEPH M LOFASO, P.E.
FL P.E. No. 88718

Project Layout

Sheet No.
7

Drawing name: J:\O6012\Roadway\Roadway\PLAYRD01.dwg Oct 16, 2023 - 9:43am jlofaso

GENERAL NOTES

1. THE BENCH MARK DATUM USED FOR THE PLANS IS N.A.V.D. 1988 (NAVD 88).
2. ALL GRADES ARE FINISHED GRADES.
3. ALL STATIONING AND OFFSETS ARE FROM, AND PERPENDICULAR OR RADIAL TO THE BASELINE OF SURVEY OF OAKLAND AVE, THE BASELINE OF CONSTRUCTION FOR CUMBERLAND AVENUE, OR THE BASELINE OF CONSTRUCTION OF TAYLOR STREET.
4. FOR STABILIZING AT INTERSECTIONS, TURNOUTS AND GRADED CONNECTIONS, SEE F.D.O.T. STANDARD PLAN INDEX NO. 000 - 515.
5. ALL GRASSED AREAS DISTURBED AS A RESULT OF CONSTRUCTION SHALL BE SODDED "IN KIND" AT THE CONTRACTOR'S EXPENSE UNLESS OTHERWISE MENTIONED IN THE PLANS. RE-SODDING SHALL BE A MINIMUM OF 30" WIDE FOR THE LENGTH OF THE DISTURBED AREA. ALL TREES WITHIN THE LIMITS OF CONSTRUCTION SHALL REMAIN UNLESS OTHERWISE NOTED.
6. UNSUITABLE MATERIALS SHALL BE REMOVED FROM THE CONSTRUCTION AREAS AND BACKFILLED WITH SUITABLE MATERIALS.
7. ALL PUBLIC AND PRIVATE PROPERTY AFFECTED BY THE CONSTRUCTION WORK SHALL BE RESTORED TO A CONDITION EQUAL TO OR BETTER THAN THE PRE-CONSTRUCTION CONDITION.
8. ANY MAILBOX WITHIN THE LIMITS OF CONSTRUCTION SHALL BE TAKEN DOWN AND RESET IN ACCORDANCE WITH U.S. POSTAL SERVICE REQUIREMENTS. ALL COSTS ASSOCIATED WITH PLACING THE MAILBOX IN A TEMPORARY LOCATION DURING CONSTRUCTION AND THEN RESETTING THE MAILBOX IN ITS FINAL LOCATION SHALL BE INCIDENTAL TO THE COST OF THE MAILBOX RELOCATION.
9. EXISTING DRAINAGE STRUCTURES WITHIN THE LIMITS OF CONSTRUCTION SHALL REMAIN UNLESS OTHERWISE NOTED.
10. ANY DRAINAGE PROBLEMS EXISTING BEFORE CONSTRUCTION COMMENCES SHALL BE BROUGHT TO THE ATTENTION OF THE CITY OF OCOEE AND PROJECT ENGINEER.
11. THE EROSION CONTROL MEASURES PER "STATE OF FLORIDA EROSION AND SEDIMENT CONTROL MANUAL" ARE THE MINIMUM REQUIRED. ADDITIONAL EROSION CONTROL MEASURES MAY BE REQUIRED DUE TO FIELD CONDITIONS AS DETERMINED BY THE CITY AUTHORIZED REPRESENTATIVE AND THE REGULATORY AGENCIES. ANY OFFSITE TRACKING SHALL BE MITIGATED BY DAILY STREET SWEEPING AT THE CONTRACTOR'S EXPENSE.
12. THE CONTRACTOR SHALL MAINTAIN ACCESS FOR LOCAL RESIDENTS, DELIVERIES, AND GARBAGE COLLECTION AT ALL TIMES DURING CONSTRUCTION. IF THE ROADWAY IS NOT ACCESSIBLE FOR GARBAGE COLLECTION, THE CONTRACTOR SHALL COORDINATE WITH WASTE MANAGEMENT AND THE RESIDENTS FOR TIMELY WASTE PICK-UPS.
13. NO STAGING OF CONSTRUCTION EQUIPMENT OR CONSTRUCTION DELIVERIES SHALL BE PERMITTED ON N. BLUFORD AVENUE.
14. ANY NAVD 88 (OR NATIONAL VERTICAL GEODETIC DATUM (NGVD29) MONUMENT WITHIN THE LIMITS OF CONSTRUCTION IS TO BE PROTECTED. IF IN DANGER OF DAMAGE, THE CONSTRUCTION MANAGER SHALL NOTIFY THE FLORIDA DEPARTMENT OF ENVIRONMENTAL PROTECTION, BUREAU OF SURVEY AND MAPPING, 3900 COMMONWEALTH BOULEVARD, M.S. 100, TALLAHASSEE, FLORIDA 32399. TELEPHONE (850) 245-2555.
15. ANY PUBLIC LAND CORNER, GPS, F.D.O.T., ORANGE COUNTY, OR CITY MONUMENT WITHIN THE LIMITS OF CONSTRUCTION IS TO BE PROTECTED. IF A CORNER OR MONUMENT IS IN DANGER OF BEING DESTROYED AND HAS NOT BEEN PROPERLY REFERENCED, THE CONTRACTOR'S CONSTRUCTION MANAGER SHALL NOTIFY THE CITY OF OCOEE PUBLIC WORKS DIVISION WITHOUT DELAY BY TELEPHONE.
16. ALL SURVEY CORNERS INDICATED ON THE PLANS SHALL BE REFERENCED AND CERTIFIED BY A STATE OF FLORIDA REGISTERED PROFESSIONAL LAND SURVEYOR PRIOR TO COMMENCEMENT OF CONSTRUCTION. ALL CORNERS DESTROYED OR OBLITERATED BY CONSTRUCTION SHALL BE RESET AND SO CERTIFIED BY THE LAND SURVEYOR PRIOR TO COMPLETION OF THE PROJECT.
17. THE LOCATION OF THE UTILITIES SHOWN IN THE PLANS ARE APPROXIMATE. THE EXACT LOCATION SHALL BE DETERMINED BY THE CONTRACTOR PRIOR TO CONSTRUCTION AND OWNERS OF SAID UTILITIES NOTIFIED PRIOR TO COMMENCING WORK. THE CONTRACTOR SHALL CALL BEFORE DIGGING SUNSHINE STATE ONE CALL OF FLORIDA AT (800) 432-4770 AS REQUIRED BY CHAPTER 556 OF THE FLORIDA STATUTES
18. ALL STAKING OF PROPOSED CONSTRUCTION TO ALLOW FOR PROPER INSTALLATION / RELOCATION OF UTILITY FACILITIES, SHALL BE PERFORMED BY THE CONTRACTOR. THE CONTRACTOR SHALL COORDINATE WITH THE IMPACTED UTILITIES AND STAKE THE ITEMS REQUESTED. THE STAKING SHALL BE SEPARATE AND IN ADDITION TO THE NORMAL STAKING FOR THE PROJECT. THE COST OF THIS STAKING SHALL BE INCIDENTAL TO AND INCLUDED IN THE COST OF THE PROJECT.
19. PRIOR TO CONSTRUCTION, THE CONTRACTOR SHALL MAKE A PRE-CONSTRUCTION VIDEO (DVD WITH VIDEO AND AUDIO FORMAT) ALONG THE PROPOSED ROUTE IN ACCORDANCE WITH THE SPECIFICATIONS. IN PARTICULAR, THE VIDEO SHALL RECORD THE TIME AND LOCATION AT WHICH IT WAS TAKEN AND DOCUMENT THE CONDITION OF EXISTING DRIVEWAYS, BUILDINGS, STRUCTURES, MAILBOXES, SIGNS, FENCES, AND LANDSCAPING ALONG PROPOSED CONSTRUCTION AREAS.
20. CONTRACTOR SHALL BE RESPONSIBLE FOR LITTER REMOVAL (TRASH, TREE LIMBS, BRUSH PILES, AND OTHER MAN MADE DEBRIS) ALONG ENTIRE RIGHT-OF-WAY, TO PROVIDE A LITTER FREE CORRIDOR AT COMPLETION OF CONSTRUCTION.
21. THE MAXIMUM ALLOWABLE LONGITUDINAL GRADE ON THE SIDEWALK IS FIVE PERCENT (5%). THE MAXIMUM ALLOWABLE CROSS-SLOPE ON THE SIDEWALK IS TWO PERCENT (2%). ALL GRADES AND CROSS SLOPES SHALL COMPLY WITH THE LATEST AMERICANS WITH DISABILITIES ACT (A.D.A.) STANDARDS FOR ACCESSIBLE DESIGN. THE CONTRACTOR SHALL NOTIFY THE ENGINEER OF RECORD IMMEDIATELY IN THE CASE THAT A.D.A. REQUIREMENTS MAY NOT BE MET, AS DESIGNED, SO THAT CORRECTIVE ACTION MAY BE PROVIDED PRIOR TO CONSTRUCTION.
22. IT SHALL BE THE CONTRACTORS COST AND WORK RESPONSIBILITY TO PROTECT THE PAVEMENT SURFACE AND REPAIR ALL SURFACE IRREGULARITIES. NO EDGE PATCHES, POTHOLE AND GOUGE PATCHES OR PARTIAL SURFACE WIDTH PATCHES SHALL BE PERMITTED IN THE FINISHED ASPHALT OR CONCRETE SURFACE OF THE PATH AND ITS AMENITIES, OR ADJACENT ROADWAY. ALL PATCHING OF THE FINISHED SURFACE SHALL BE FULL WIDTH OF THE SURFACE BEING REPAIRED AND EXTEND AT A MINIMUM OF ONE FOOT (1') IN LENGTH BEYOND THE IRREGULARITY EDGES. THE COST FOR ALL WORK AND MATERIALS NECESSARY TO REPAIR THE ROADWAY SURFACE TO ITS REQUIRED SURFACE PROFILE SHALL BE INCIDENTAL TO THE OTHER CONTRACT PAY ITEM BID COSTS WITH NO ADDITIONAL CHARGE TO THE CITY.
23. CONTRACTOR SHALL NOTIFY THE CITY OF OCOEE A MINIMUM OF ONE (1) WEEK IN ADVANCE OF COMMENCING ANY CONSTRUCTION ACTIVITIES. UPON COMPLETION OF THE CONSTRUCTION, THE CITY OF OCOEE SHALL BE NOTIFIED FOR FINAL INSPECTION.
24. EXISTING IRRIGATION LINES/SYSTEMS IN CONFLICT WITH PROPOSED IMPROVEMENTS SHALL BE ADJUSTED AS NECESSARY TO RELOCATE OUTSIDE OF THE PROPOSED SIDEWALK, COST OF WHICH SHALL BE INCIDENTAL TO THE PAYMENT OF ASSOCIATED PAVING.
25. ALL EXISTING VALVES, PULL BOXES, & MANHOLE TOPS SHALL BE ADJUSTED TO MATCH PROPOSED GRADE.
26. PRIVATE UTILITIES TO BE ADJUSTED BY UTILITY OWNERS. CONTRACTOR SHALL COORDINATE WITH UTILITY COMPANIES WHEN ADJUSTMENTS ARE REQUIRED. EXISTING POWER POLES TO BE REMOVED AND ASSOCIATED LINES TO BE MOVED UNDERGROUND.
27. ALL IMPROVEMENTS SHALL BE IN CONFORMANCE WITH THE CURRENT CITY OF OCOEE ENGINEERING STANDARDS MANUAL, MATERIALS LIST , AND DETAILS. FINAL PLAN APPROVAL DOES NOT PROVIDE EXEMPTION FROM THESE REQUIREMENTS.
28. ANY DEVIATION FROM THE CITY OF OCOEE ENGINEERING STANDARDS MUST BE REQUESTED AND APPROVED IN WRITING PRIOR TO CONSTRUCTION.
29. THE MOST STRINGENT STANDARDS BETWEEN THE CITY OF OCOEE AND FDEP STANDARDS SHALL BE FOLLOWED FOR ALL PUBLIC UTILITIES.
30. CONTRACTOR SHALL REFER TO THE FDOT STANDARD SPECIFICATIONS, FDOT STANDARD PLANS, CITY OF OCOEE ENGINEERING STANDARDS MANUAL, LAND DEVELOPMENT CODE, APPROVED MATERIALS LIST,AND CITY DETAILS. THE MOST STRINGENT STANDARDS BETWEEN THE CITY OF OCOEE STANDARDS AND STANDARDS SET FORTH IN THESE NOTES SHALL BE FOLLOWED.
31. AS-BUILTS NEED TO BE SUBMITTED TO THE CITY SIGNED AND SEALED IN ACCORDANCE WITH SECTION 3.01.05 OF THE ENGINEERING STANDARDS MANUAL IN THE FOLLOWING FORMATS:
   A: ONE PDF COPY
   B: ONE CAD COPY DRAWN IN STATE PLANE COORDINATES

UTILITY OWNERS:

TELEPHONE
AT&T/DISTRIBUTION
PH: 561-997-0240
ATTN: DINO FARRUGGIO

INTERNET/CABLE/TV/PHONE/FIBER
CHAPTER COMMUNICATIONS
PH: 407-532-8509
ALT: 407-448-5506
ATTN: MARVIN USRY JR

FIBER OPTIC
LEVEL 3 COMMUNICATIONS
PH: 877-366-8344 X2
ATTN: NETWORK RELATIONS

MCI
PH: 469-886-4238
ATTN: DEAN BOYERS

CENTURYLINK WINTER GARDEN
PH: 407-814-5293
ATTN: TY LESLIE

ELECTRIC
DUKE ENERGY
PH: 727-893-9394
ATTN: MEGAN VONSTETINA

NATURAL GAS LINES
LAKE APOPKA NATURAL GAS DISTRICT
1320 WINTER GARDEN-VINELAND RD.
WINTER GARDEN, FL
PH: 407-656-2734
ATTN: ANTONIO GIBSON

TRAFFIC SIGNALS & FIBER
ORANGE COUNTY PUBLIC WORKS
PH: 407-836-7804
ATTN: ROGER SMITH

SIGNING & PAVEMENT MARKING GENERAL NOTES

1. ALL SIGNS AND PAVEMENT MARKINGS ARE TO BE PLACED IN ACCORDANCE WITH THE F.H.W.A. "MANUAL ON UNIFORM TRAFFIC CONTROL DEVICES", THE F.H.W.A. "MANUAL ON STANDARD HIGHWAY SIGNS", AND THE F.D.O.T. "STANDARD PLANS", LATEST EDITION.
2. ALL SIGNS TO BE REMOVED ARE THE PROPERTY OF THE CITY OF OCOEE. ALL COSTS ASSOCIATED WITH COLLECTING, TRANSPORTING, AND DEPOSITING THE REMOVED SIGNS IN AN AREA DESIGNATED BY THE CITY SHALL BE INCIDENTAL TO THE COSTS FOR SIGN REMOVAL.
3. ALL SIGNS INCLUDING STOP SIGNS ON SIDE STREETS SHALL BE UNOBSTRUCTED.
4. DUE TO DESTRUCTION AND TRACKING BY CONSTRUCTION VEHICLES, ADDITIONAL PAVEMENT MARKINGS AT THE BEGINNING AND END OF PROJECT MAY BE REQUIRED AS DETERMINED BY THE CITY.
5. ALL PROPOSED STRIPING SHALL BE THERMOPLASTIC.
6. IT IS THE CONTRACTOR'S RESPONSIBILITY TO REMOVE AND REPLACE ALL EXISTING SIGNS THAT CONFLICT WITH CONSTRUCTION OPERATIONS. IF SIGNS ARE DAMAGED BY THE CONTRACTOR, THE SIGNS SHALL BE REPLACED AT THE CONTRACTOR'S EXPENSE.
7. CAUTION SHALL BE EXERCISED WHILE RELOCATING EXISTING SIGNS TO PREVENT DAMAGE TO THE SIGNS. IF SIGNS ARE DAMAGED BEYOND USE, AS DETERMINED BY THE CITY OF OCOEE, SIGNS SHALL BE REPLACED BY THE CONTRACTOR AT THEIR OWN EXPENSE.

PERVIOUS PAVERS INSPECTION AND MAINTENANCE PLAN NOTES

1. INSPECTION

   THE PERVIOUS PAVER SYSTEM SHALL BE INSPECTED EACH 6 MONTHS FOR THE FIRST YEAR AFTER CONSTRUCTION, AND AT LEAST ONCE A YEAR FROM THAT POINT ON TO ENSURE THE PAVEMENT SURFACE IS INFILTRATING AND ASSESS THE NEED FOR MAINTENANCE.

   VISUAL INSPECTIONS SHALL BE PERFORMED TO LOOK FOR:

   - STANDING WATER AFTER STORMS.
   - SURFACE INFILTRATION TESTS MAY ALSO BE CONDUCTED USING C1781 STANDARD TEST METHOD FOR SURFACE INFILTRATION RATE OF PERMEABLE UNIT PAVEMENT SYSTEMS.
   - GROWTH OF VEGETATION WITHIN THE PAVER JOINTS.
   - BUILDUP OF DEBRIS OR SEDIMENT.
   - SETTLING OR DAMAGE TO THE PAVER SYSTEM.

2. MAINTENANCE

   - LANDSCAPE MAINTENANCE ACTIVITIES SUCH AS MULCHING AND LAWN MOWING CAN CONTRIBUTE TO SEDIMENT ACCUMULATION, KEEPING THESE MATERIALS OFF PAVEMENT SURFACES WILL PROLONG THE PROPER FUNCTION OF THE SYSTEM.
   - MAINTAIN GROUNDCOVER AND PLANTS AROUND THE PERIMETER OF THE PAVER SYSTEM TO ENSURE STABILITY AND MINIMIZE SEDIMENT RUNNING ONTO THE PAVEMENT SURFACE.
   - JOINTS SHALL BE KEPT FREE OF WEEDS AND OTHER VEGETATION.
   - A STREET SWEEPER MAY BE USED TO REMOVE ACCUMULATED SEDIMENT FROM THE SYSTEM AND PREVENT CLOGGING.
   - IF SWEEPING IS INSUFFICIENT TO RESTORE PROPER INFILTRATION, A VAC SYSTEM CAN BE USED TO REMOVE MORE OF THE MATERIAL FROM WITHIN THE JOINTS. THE JOINTS SHOULD THEN BE REPLENISHED WITH FRESH AGGREGATE.
   - ANY SETTLEMENT OR DAMAGE TO THE PAVER SYSTEM THAT COMPROMISES THE STRUCTUAL INTEGRITY, OR ALLOWS SEDIMENTS DIRECTLY INTO THE SUBSURFACE STORAGE SHALL BE REPAIRED.

EXIST. STORM CULVERT REMOVAL
PROP. CLEARING & GRUBBING
EXIST. CONC. TO BE REMOVED
EXIST. TREE TO BE REMOVED

GRAPHIC SCALE
20 0 10 20 40
(IN FEET)
N

EXIST. R/W
+88.12
44.04' LT
+89.77
41.55' LT
+02.41
49.90' LT
EXIST. CONC. TO BE REMOVED (56 SY)
EXIST. CONC. CURB TO BE REMOVED
+01.37
41.09' LT
EXIST. WEIGH SCALE (TO BE REMOVED)
EXIST. CONC. TO BE REMOVED (41 SY)
EXIST. BFP (TO BE RELOCATED)
+64.71
46.13' LT
EXIST. CONC. TO BE REMOVED (48 SY)
EXIST. CONC. WALL (TO BE REMOVED)
EXIST. CONC. TO BE REMOVED (166 SY)
EXIST. CHAIN LINK FENCE (TO BE REMOVED)
FOR ℄ TRAIL AND MEDIAN DETAILS SEE SHEET 17-18
EXIST. CONC. TO BE REMOVED (30 SY)
+42.90
39.38' LT
FOR ℄ SURVEY (TAYLOR) DETAILS SEE SHEET 19
BP: 19+00.00
℄ SURVEY (OAKLAND)
N89°33'41"E
BEGIN PROJECT
BEGIN CONSTRUCTION
W OAKLAND AVE
℄ SURVEY – STA. 19+86.45
STATION EQUATION
STA. 20+00.46 – ℄ SURVEY (OAKLAND)=
STA. 606+80.63 – ℄ SURVEY (TAYLOR)
W Oakland Ave.
Taylor St.
Railroad
+95.04
41.48' RT
EXIST. FIRE HYDRANT (TO BE RELOCATED)
+80.52
72.11' RT
+67.49
79.62' RT
+71.84
77.85' RT
EXIST. R/W
APPROXIMATE R/W
℄ SURVEY (OAKLAND)
EXIST. CONC. TO BE REMOVED (30 SY)
EXIST. CONC. TO BE REMOVED (171 SY)
EXIST. CONC. CURB TO BE REMOVED
EXIST. WOOD FENCE (TO BE REMOVED WITHIN R/W)
MATCH LINE STA. 25+00.00

NOTE:
ALL POWER POLES WITHIN PROJECT LIMITS ARE SUBJECT TO RELOCATION PER DUKE ENERGY PLANS.

No.	Date	Revision	By	No.	Date	Revision	By
1				1			
2				2			
3				3			
4				4			

cph www.cphcorp.com
A Full Service A & E Firm
Architects M/E/P Engineers Planners Environmental Surveyors Landscape Architects Traffic/Transportation
Offices In: • Florida • Puerto Rico • Connecticut • Maryland • Texas

Designed by:	CJT	Date: 10/16/2023
Drawn by:	AM/CJT	Scale: AS NOTED
Checked by:	KRL	
Approved by:	JML	
Job No.	O6012	©2023

Oakland Ave.
City of Ocoee, Florida

Plans Prepared By:
CPH, Inc.
500 W. Fulton St. Sanford, FL 32771
Ph: 407.322.6841
Licenses:
Eng. C.O.A. No. 3215 Arch. Lic. No. AA2600926
Survey L.B. No. 7143 Landscp. Lic. No. LC0000298

JOSEPH M LOFASO, P.E.
FL P.E. No. 88718

Demo Detail

Sheet No. 9

Drawing name: J:\O6012\Roadway\Roadway\PLAN\DEMOR001.dwg Oct 16, 2023 - 10:16am jlofaso

EXIST. STORM CULVERT REMOVAL

PROP. CLEARING & GRUBBING

EXIST. CONC. TO BE REMOVED

EXIST. TREE TO BE REMOVED

GRAPHIC SCALE 20 0 10 20 40 (IN FEET)

N

MATCH LINE STA. 25+00.00

W Oakland Ave.

N. Cumberland Ave.

S. Bluford Ave.

℄ SURVEY (CUMBERLAND)

EXIST. CONC. CURB TO BE REMOVED

+49.72 / 39.72' LT

EXIST. CONC. TO BE REMOVED (166 SY)

+35.32 / 39.44' LT

+07.57 / 45.07' LT

+08.19 / 39.61' LT

EXIST. CONC. WALL (TO BE REMOVED 18 SY)

+79.06 / 58.25' LT

EXIST. STRUCTURES (TO REMAIN)

+75.78 / 39.36' LT

REMOVE EXIST. STORM CULVERT

REMOVE EXIST. S/W

+05.06 / 58.19' LT

+08.42 / 39.25' LT

EXIST. STRUCTURES (TO REMAIN)

EXIST. STRUCTURES (TO REMAIN)

EXIST. STRUCTURES (TO REMAIN)

+50.93 / 40.83' LT

REMOVE EXIST. STEPS

EXIST. STRUCTURES (TO REMAIN)

EXIST. STRUCTURES (TO REMAIN)

+23.57 / 40.52' LT

EXIST. CONC. CURB TO BE REMOVED

+45.04 / 11.49' LT

+56.00 / 0.00'

PI: 30+75.53

+45.28 / 39.83' RT

+76.71 / 41.93' RT

EXIST. CONC. TO BE REMOVED (171 SY)

℄ SURVEY (OAKLAND)

REMOVE EXIST. S/W

+78.80 / 61.56' RT

+06.26 / 41.49' RT

+03.97 / 61.38' RT

EXIST. STORM CULVERT TO REMAIN

REMOVE EXIST. S/W

REMOVE EXIST. S/W

EXIST. CONC. TO BE REMOVED (175 SY)

℄ SURVEY (OAKLAND)

+21.70 / 40.50' RT

+44.94 / 11.50' RT

EXIST. STRUCTURES (TO REMAIN)

STATION EQUATION

STA. 26+92.33 – ℄ SURVEY (OAKLAND)=

STA. 100+00.00 – ℄ SURVEY (CUMBERLAND)

END PROJECT

END CONSTRUCTION

W OAKLAND AVE

℄ SURVEY – STA. 30+64.04

EXIST. R/W

NOTE:
ALL POWER POLES WITHIN PROJECT LIMITS ARE SUBJECT TO RELOCATION PER DUKE ENERGY PLANS.

No.	Date	Revision	By	No.	Date	Revision	By
1				1			
2				2			
3				3			
4				4			

cph www.cphcorp.com

A Full Service A & E Firm: Architects, Engineers, Environmental, Landscape Architects, M/E/P, Planners, Surveyors, Traffic/Transportation

Offices In: • Florida • Puerto Rico • Connecticut • Maryland • Texas

Designed by:	CJT	Date: 10/16/2023
Drawn by:	AM/CJT	Scale: AS NOTED
Checked by:	KRL	
Approved by:	JML	
Job No.	O6012	©2023

Oakland Ave.
City of Ocoee, Florida

Plans Prepared By: CPH, Inc. 500 W. Fulton St. Sanford, FL 32771 Ph: 407.322.6841 Licenses: Eng. C.O.A. No. 3215 Arch. Lic. No. AA2600926 Survey L.B. No. 7143 Landscp. Lic. No. LC0000298

JOSEPH M LOFASO, P.E. FL P.E. No. 88718

Demo Detail 2

Sheet No. 10

Drawing name: J:\O6012\Roadway\Roadway\PLAN\DEMORD01.dwg Oct 16, 2023 - 10:16am jlofaso

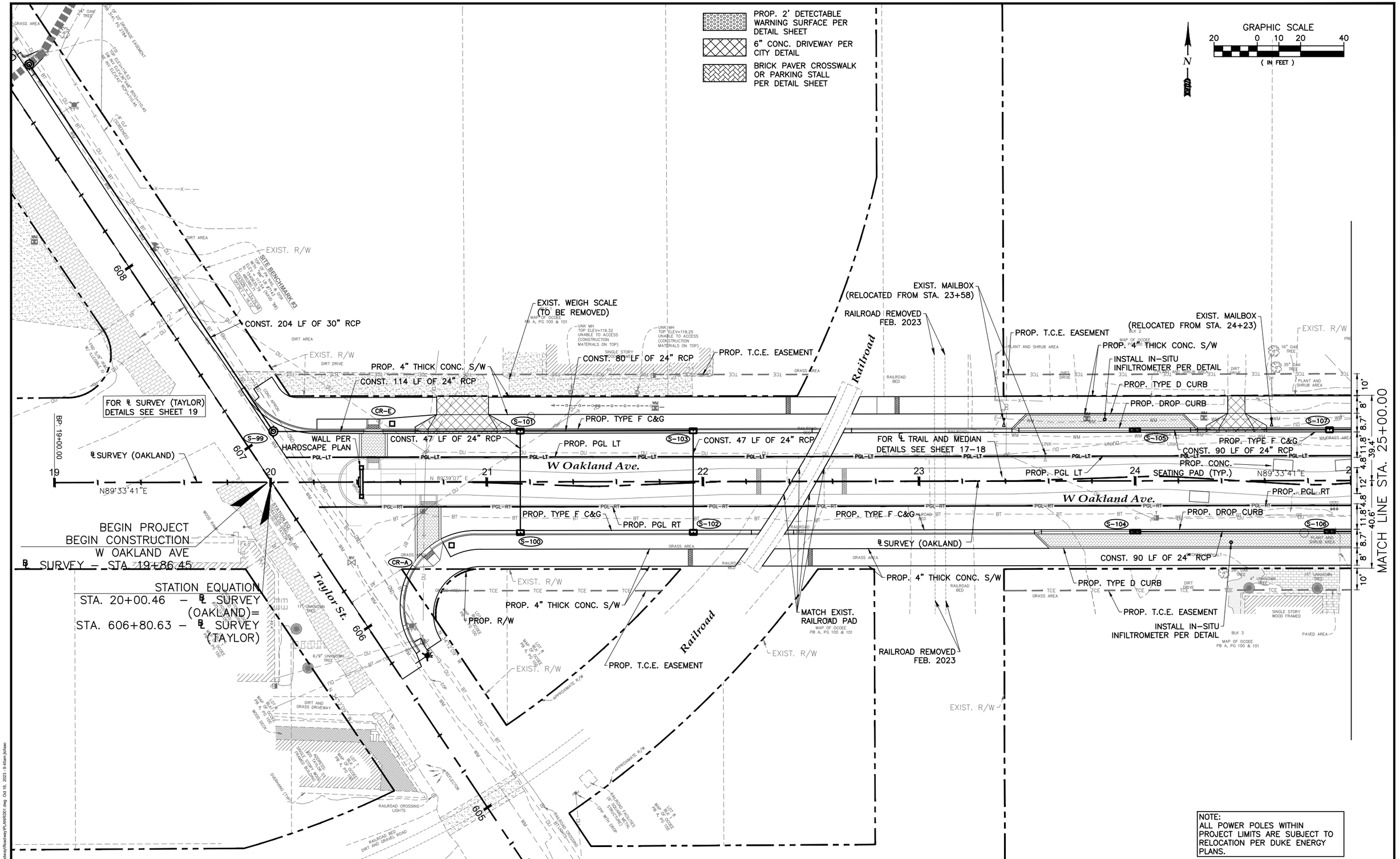

No.	Date	Revision	By	No.	Date	Revision	By
1				1			
2				2			
3				3			
4				4			

cph — www.cphcorp.com

A Full Service A & E Firm
Architects, Engineers, Environmental, Landscape Architects, M/E/P, Planners, Surveyors, Traffic/Transportation

Offices In: • Florida • Puerto Rico • Connecticut • Maryland • Texas

Designed by:	CJT	Date: 10/16/2023
Drawn by:	AM/CJT	Scale: AS NOTED
Checked by:	KRL	
Approved by:	JML	
Job No.	O6012	©2023

Oakland Ave.
City of Ocoee, Florida

Plans Prepared By:
CPH, Inc.
500 W. Fulton St. Sanford, FL 32771
Ph: 407.322.6841
Licenses:
Eng. C.O.A. No. 3215 *Arch. Lic. No. AA26000926*
Survey L.B. No. 7143 *Landscp. Lic. No. LC0000298*

JOSEPH M LOFASO, P.E.
FL P.E. No. 88718

Plan Sheet
Sta. 20+00 to Sta. 25+00

Sheet No.
11

Drawing name: J:\O6012\Roadway\Roadway\PLAN\R001.dwg Oct 16, 2023 - 9:54am jlofaso

PROP. 2' DETECTABLE WARNING SURFACE PER DETAIL SHEET

6" CONC. DRIVEWAY PER CITY DETAIL

BRICK PAVER CROSSWALK OR PARKING STALL PER DETAIL SHEET

STATION / OFFSET TO ℄ SURVEY

CURB RAMP & DRIVEWAY REFERENCE POINT

GRAPHIC SCALE (IN FEET)

FOR ℄ SURVEY (TAYLOR) DETAILS SEE SHEET 19

FOR ℄ TRAIL AND MEDIAN DETAILS SEE SHEET 17–18

℄ SURVEY (OAKLAND)

BEGIN PROJECT
BEGIN CONSTRUCTION
W OAKLAND AVE
℄ SURVEY – STA. 19+86.45

STATION EQUATION
STA. 20+00.46 – ℄ SURVEY (OAKLAND)=
STA. 606+80.63 – ℄ SURVEY (TAYLOR)

W Oakland Ave.

Taylor St.

Railroad

MATCH LINE STA. 25+00.00

No.	Date	Revision	By	No.	Date	Revision	By
1				5			
2				6			
3				7			
4				8			

cph — www.cphcorp.com

A Full Service A & E Firm: Architects, Engineers, Environmental, Landscape Architects, M/E/P, Planners, Surveyors, Traffic/Transportation

Offices In: • Florida • Puerto Rico • Connecticut • Maryland • Texas

Designed by:	CJT	Date: 10/16/2023
Drawn by:	AM/CJT	Scale: AS NOTED
Checked by:	KRL	
Approved by:	JML	
Job No.	O6012	©2023

Oakland Ave.
City of Ocoee, Florida

Plans Prepared By: CPH, Inc.
500 W. Fulton St. Sanford, FL 32771
Ph: 407.322.6841
Licenses: Eng. C.O.A. No. 3215, Arch. Lic. No. AA26000926, Survey L.B. No. 7143, Landscp. Lic. No. LC0000298

JOSEPH M LOFASO, P.E.
FL P.E. No. 88718

Plan Sheet - Geometry
Sta. 20+00 to Sta. 25+00

Sheet No. 12

Drawing name: J:\O6012\Roadway\Roadway\PLANR006.dwg Oct 16, 2023 - 9:46am jlofaso

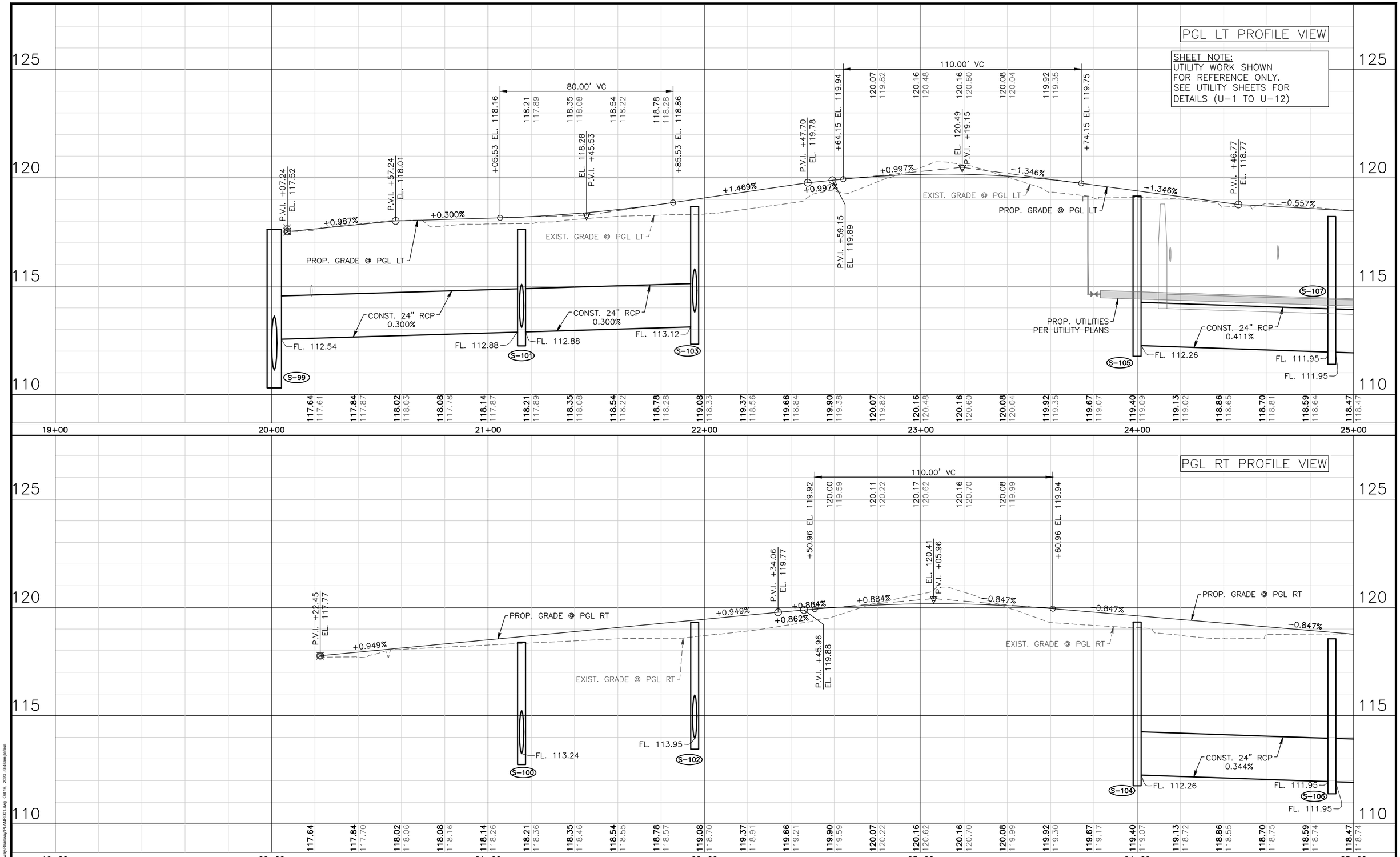

No.	Date	Revision	By	No.	Date	Revision	By
1				1			
2				2			
3				3			
4				4			

cph
www.cphcorp.com

A Full Service A & E Firm
Architects M/E/P
Engineers Planners
Environmental Surveyors
Landscape Architects Traffic/Transportation

Offices In:
- Florida
- Puerto Rico
- Connecticut
- Maryland
- Texas

Designed by:	CJT	Date: 10/16/2023	
Drawn by:	AM/CJT	Scale: AS NOTED	
Checked by:	KRL		
Approved by:	JML		
Job No.	O6012	©2023	

Oakland Ave.
City of Ocoee, Florida

Plans Prepared By:
CPH, Inc.
500 W. Fulton St. Sanford, FL 32771
Ph: 407.322.6841
Licenses:
Eng. C.O.A. No. 3215 Arch. Lic. No. AA2600926
Survey L.B. No. 7143 Landscp. Lic. No. LC0000298

JOSEPH M LOFASO, P.E.
FL P.E. No. 88718

Profile Sheet
Sta. 20+00 to Sta. 25+00

Sheet No.
13

Drawing name: J:\O6012\Roadway\Roadway\PLAN\R001.dwg Oct 16, 2023 - 9:46am jlofaso

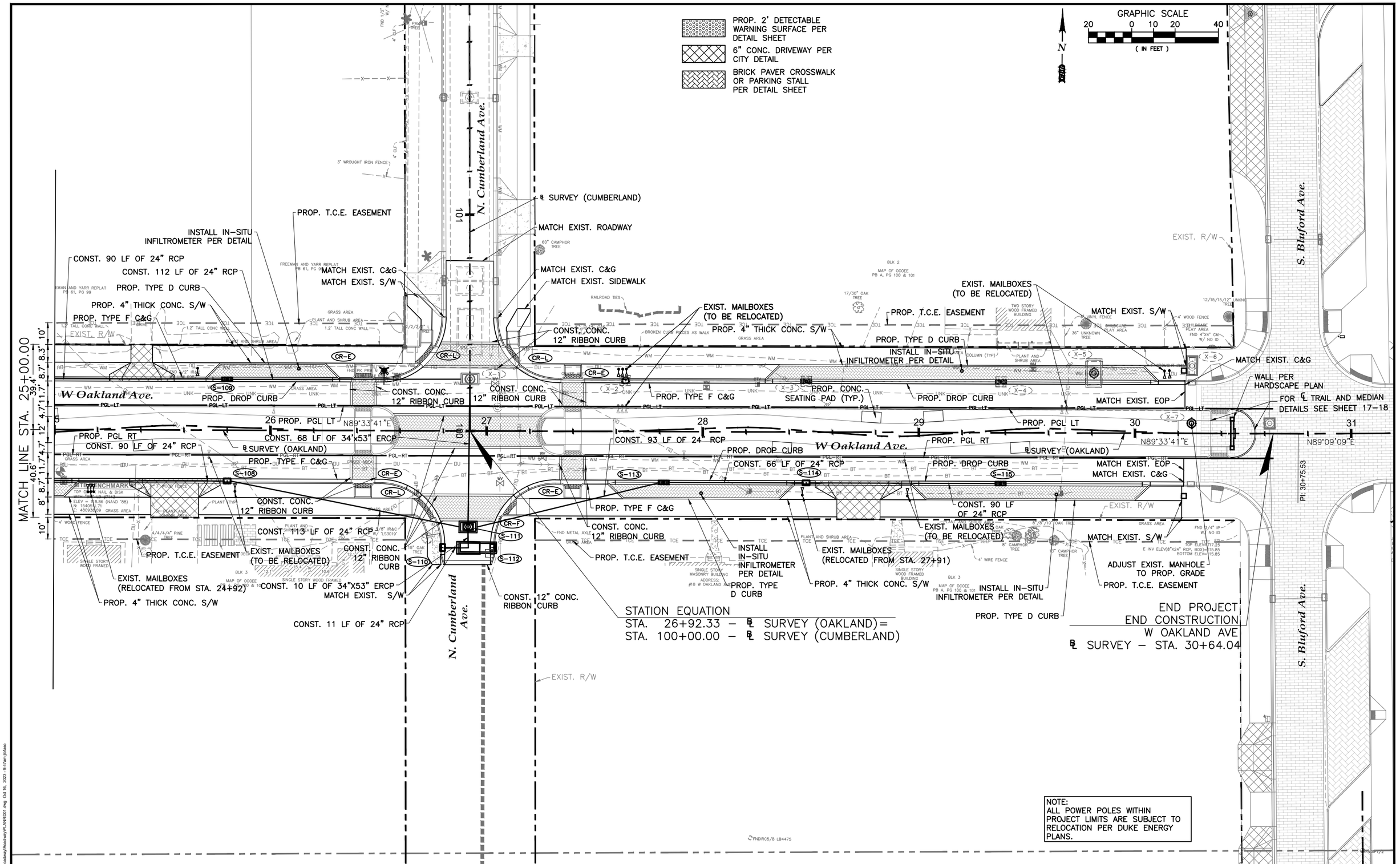

No.	Date	Revision	By	No.	Date	Revision	By
1				4			
2				5			
3				6			

cph — www.cphcorp.com

A Full Service A & E Firm
Architects, Engineers, Environmental, Landscape Architects, M/E/P, Planners, Surveyors, Traffic/Transportation

Offices In: • Florida • Puerto Rico • Connecticut • Maryland • Texas

Designed by:	CJT	Date: 10/16/2023	
Drawn by:	AM/CJT	Scale: AS NOTED	
Checked by:	KRL		
Approved by:	JML		
Job No.	O6012	©2023	

Oakland Ave.
City of Ocoee, Florida

Plans Prepared By:
CPH, Inc.
500 W. Fulton St. Sanford, FL 32771
Ph: 407.322.6841
Licenses:
Eng. C.O.A. No. 3215 Arch. Lic. No. AA2600926
Survey L.B. No. 7143 Landscp. Lic. No. LC0000298

JOSEPH M LOFASO, P.E.
FL P.E. No. 88718

Plan Sheet
Sta. 25+00 to Sta. 31+00

Sheet No.
14

Drawing name: J:\O6012\Roadway\Roadway\PLANR001.dwg Oct 16, 2023 - 9:47am jlofaso

PROP. 2' DETECTABLE WARNING SURFACE PER DETAIL SHEET

6" CONC. DRIVEWAY PER CITY DETAIL

BRICK PAVER CROSSWALK OR PARKING STALL PER DETAIL SHEET

+XX.XX / XX.XX' XX — STATION / OFFSET TO ℄ SURVEY

+XX.XX / XX.XX' XX — CURB RAMP & DRIVEWAY REFERENCE POINT

GRAPHIC SCALE 20 0 10 20 40 (IN FEET)

N

MATCH LINE STA. 25+00.00

N. Cumberland Ave.

S. Bluford Ave.

W Oakland Ave.

℄ SURVEY (CUMBERLAND)

℄ SURVEY (OAKLAND)

PROP. PGL LT

PROP. PGL RT

N89°33'41"E

N89°09'09"E

EXIST. R/W

STATION EQUATION

STA. 26+92.33 – ℄ SURVEY (OAKLAND)=

STA. 100+00.00 – ℄ SURVEY (CUMBERLAND)

END PROJECT

END CONSTRUCTION

W OAKLAND AVE

℄ SURVEY – STA. 30+64.04

No.	Date	Revision	By	No.	Date	Revision	By
1				1			
2				2			
3				3			
4				4			

cph — www.cphcorp.com

A Full Service A & E Firm

Architects, Engineers, Environmental, Landscape Architects, M/E/P, Planners, Surveyors, Traffic/Transportation

Offices In: • Florida • Puerto Rico • Connecticut • Maryland • Texas

Designed by:	CJT	Date: 10/16/2023
Drawn by:	AM/CJT	Scale: AS NOTED
Checked by:	KRL	
Approved by:	JML	
Job No.	O6012	©2023

Oakland Ave.
City of Ocoee, Florida

Plans Prepared By: CPH, Inc.
500 W. Fulton St. Sanford, FL 32771
Ph: 407.322.6841
Licenses:
Eng. C.O.A. No. 3215 Arch. Lic. No. AA26000926
Survey L.B. No. 7143 Landscp. Lic. No. LC0000298

JOSEPH M LOFASO, P.E.
FL P.E. No. 88718

Plan Sheet - Geometry
Sta. 25+00 to Sta. 31+00

Sheet No. 15

Drawing name: J:\O6012\Roadway\Roadway\PLANR006.dwg Oct 16, 2023 - 9:47am jlofaso

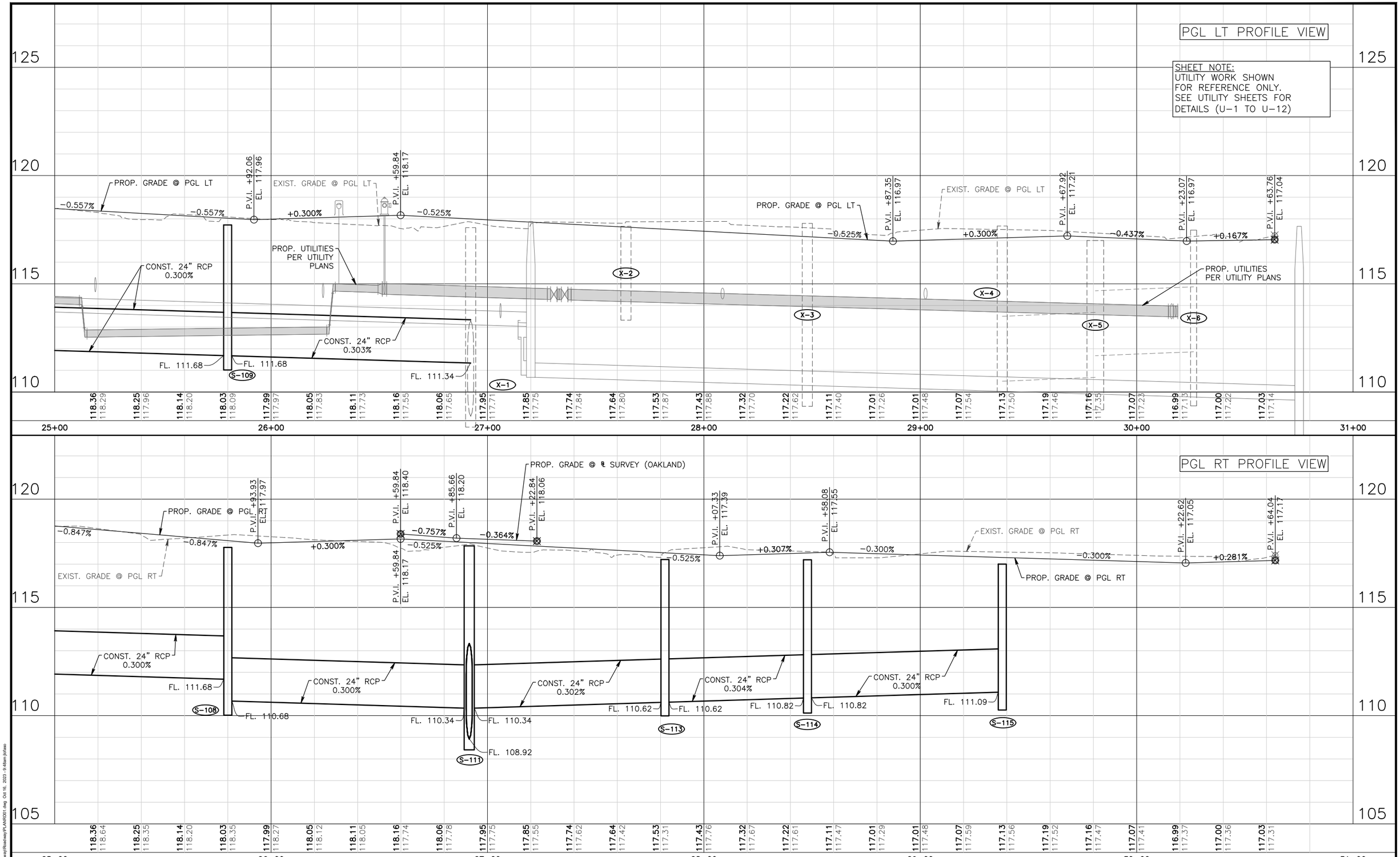

No.	Date	Revision	By	No.	Date	Revision	By
1				1			
2				2			
3				3			
4				4			

cph — www.cphcorp.com

A Full Service A & E Firm: Architects, Engineers, Environmental, Landscape Architects, M/E/P, Planners, Surveyors, Traffic/Transportation

Offices In: • Florida • Puerto Rico • Connecticut • Maryland • Texas

Designed by:	CJT	Date: 10/16/2023	
Drawn by:	AM/CJT	Scale: AS NOTED	
Checked by:	KRL		
Approved by:	JML		
Job No.	O6012	©2023	

Oakland Ave.
City of Ocoee, Florida

Plans Prepared By: CPH, Inc.
500 W. Fulton St. Sanford, FL 32771
Ph: 407.322.6841
Licenses: Eng. C.O.A. No. 3215 Arch. Lic. No. AA2600926 Survey L.B. No. 7143 Landscp. Lic. No. LC0000298

JOSEPH M LOFASO, P.E.
FL P.E. No. 88718

Profile Sheet
Sta. 25+00 to Sta. 31+00

Sheet No. **16**

Drawing name: J:\O6012\Roadway\Roadway\PLAN\R001.dwg Oct 16, 2023 - 9:48am jlofaso

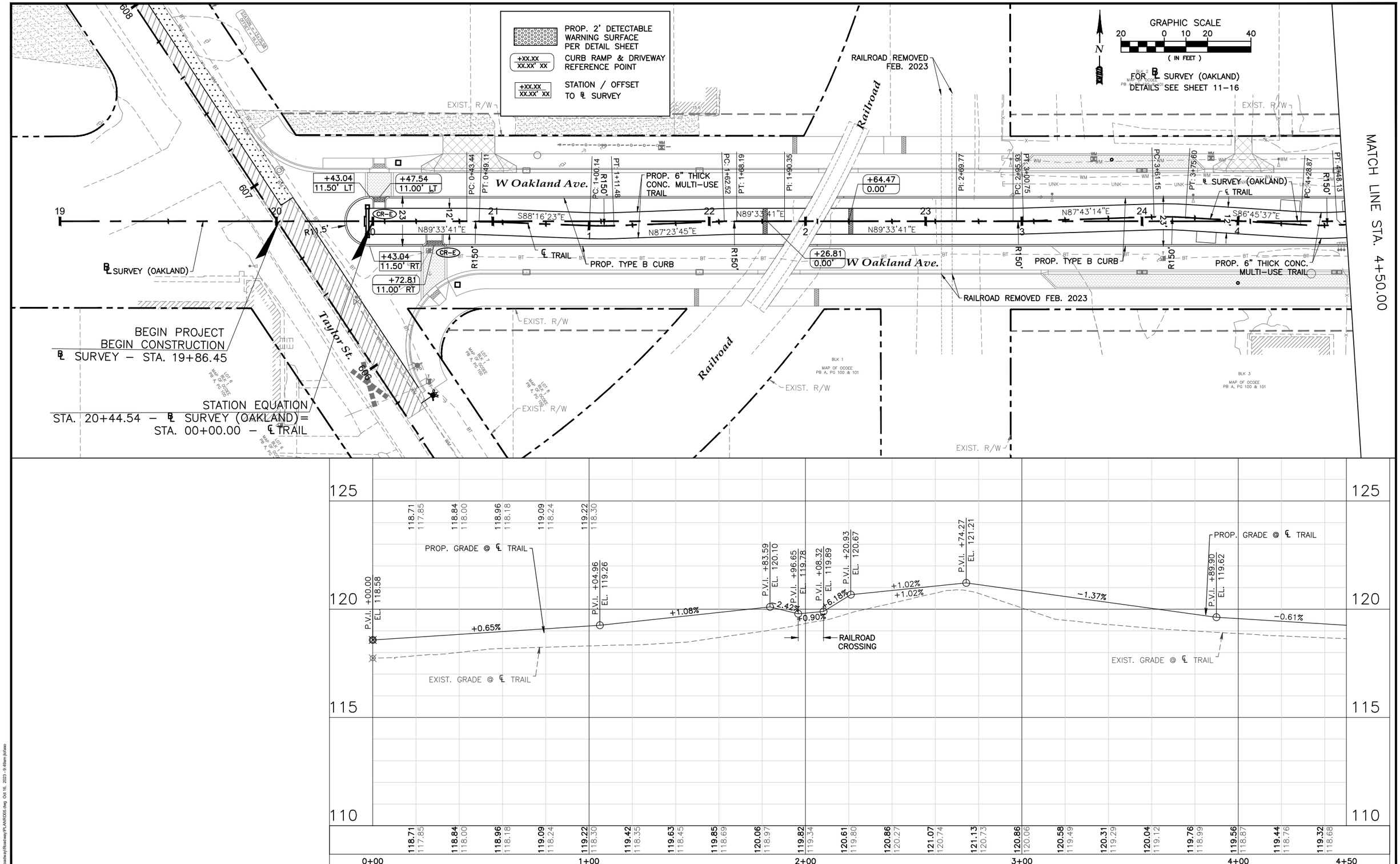

No.	Date	Revision	By	No.	Date	Revision	By
1				1			
2				2			
3				3			
4				4			

cph — www.cphcorp.com

A Full Service A & E Firm
Architects, Engineers, Environmental, Landscape Architects, M/E/P, Planners, Surveyors, Traffic/Transportation

Offices In: • Florida • Puerto Rico • Connecticut • Maryland • Texas

Designed by:	CJT	Date: 10/16/2023	
Drawn by:	AM/CJT	Scale: AS NOTED	
Checked by:	KRL		
Approved by:	JML		
Job No.	O6012	©2023	

Oakland Ave.
City of Ocoee, Florida

Plans Prepared By:
CPH, Inc.
500 W. Fulton St. Sanford, FL 32771
Ph: 407.322.6841
Licenses:
Eng. C.O.A. No. 3215 *Arch. Lic. No. AA26000926*
Survey L.B. No. 7143 *Landscp. Lic. No. LC0000298*

JOSEPH M LOFASO, P.E.
FL P.E. No. 88718

Plan & Profile - CL Trail

Sheet No.
17

Drawing name: J:\O6012\Roadway\Roadway\PLANR005.dwg Oct 16, 2023 - 9:49am jlofaso

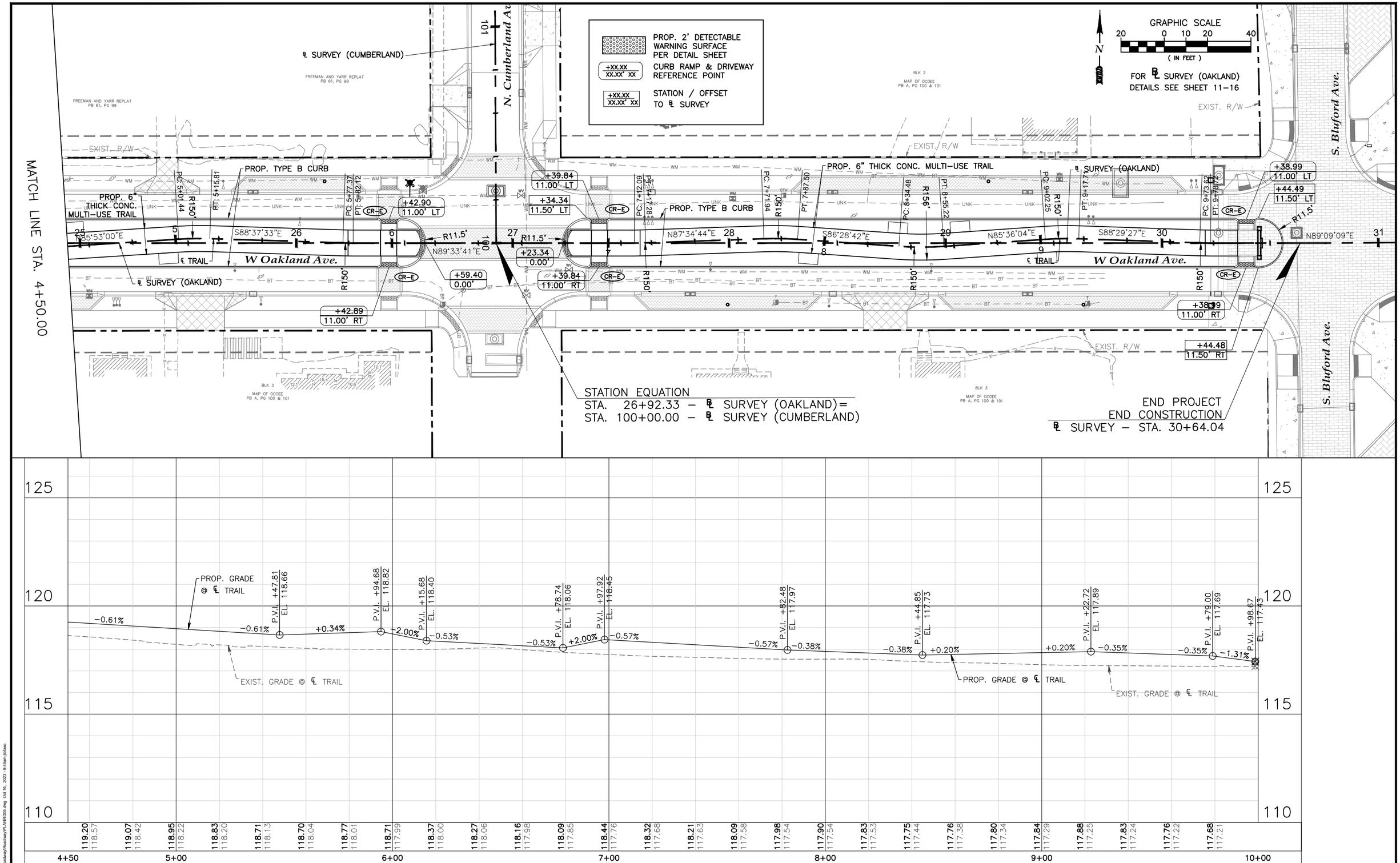

No.	Date	Revision	By	No.	Date	Revision	By
1				1			
2				2			
3				3			
4				4			

cph — www.cphcorp.com

A Full Service A & E Firm: Architects, Engineers, Environmental, Landscape Architects, M/E/P, Planners, Surveyors, Traffic/Transportation

Offices In: • Florida • Puerto Rico • Connecticut • Maryland • Texas

Designed by:	CJT
Drawn by:	AM/CJT
Checked by:	KRL
Approved by:	JML
Job No.	O6012

Date: 10/16/2023
Scale: AS NOTED
©2023

Oakland Ave.
City of Ocoee, Florida

Plans Prepared By: CPH, Inc.
500 W. Fulton St. Sanford, FL 32771
Ph: 407.322.6841
Licenses: Eng. C.O.A. No. 3215, Arch. Lic. No. AA2600926, Survey L.B. No. 7143, Landscp. Lic. No. LC0000298

JOSEPH M LOFASO, P.E.
FL P.E. No. 88718

Plan & Profile - CL Trail 2

Sheet No. 18

Drawing name: J:\O6012\Roadway\Roadway\PLAN\R005.dwg Oct 16, 2023 - 9:49am jlofaso

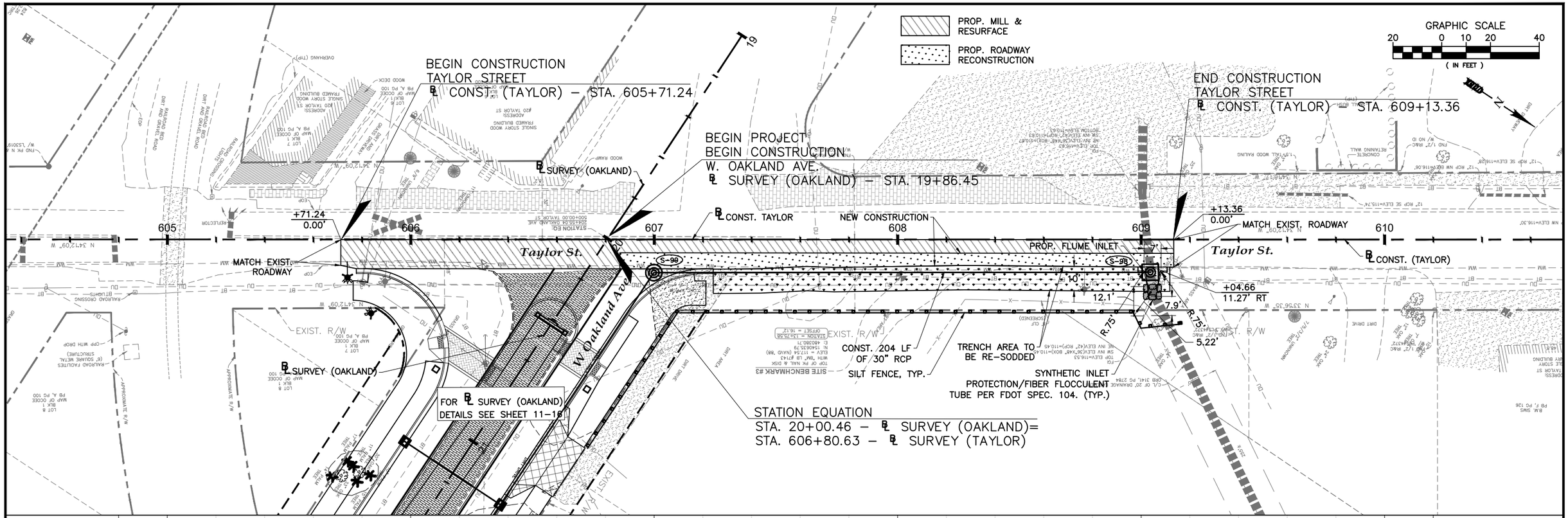

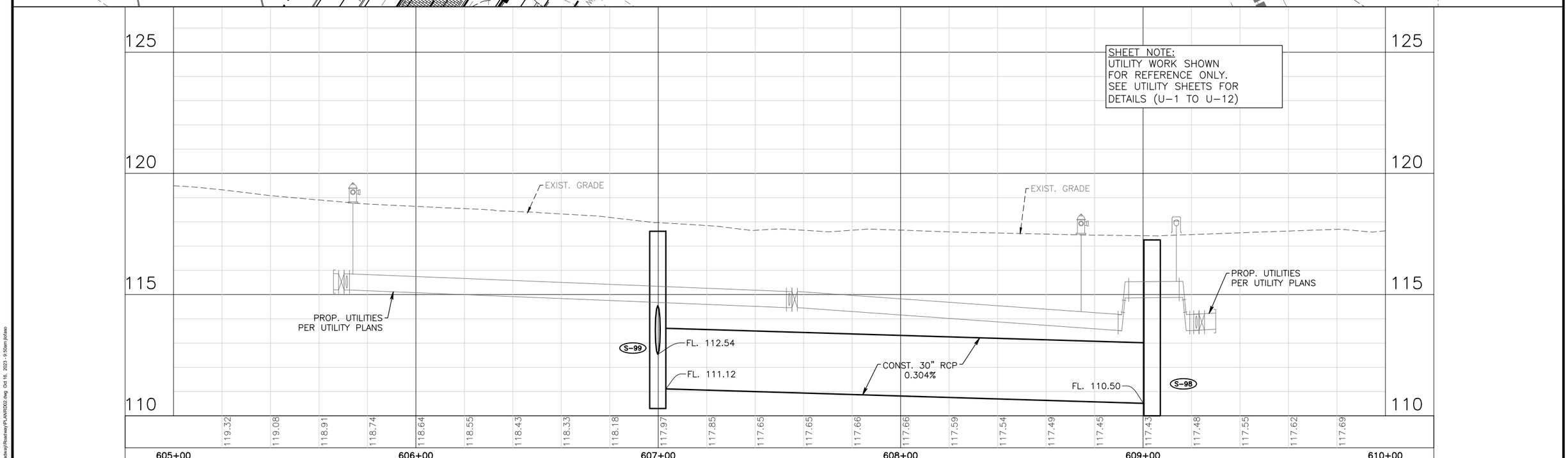

No.	Date	Revision	By	No.	Date	Revision	By
1				1			
2				2			
3				3			
4				4			

cph — www.cphcorp.com

A Full Service A & E Firm
Architects, Engineers, Environmental, Landscape Architects, M/E/P, Planners, Surveyors, Traffic/Transportation

Offices In: • Florida • Puerto Rico • Connecticut • Maryland • Texas

Designed by:	CJT	Date: 10/16/2023
Drawn by:	AM/CJT	Scale: AS NOTED
Checked by:	KRL	
Approved by:	JML	
Job No.	O6012	©2023

Oakland Ave.
City of Ocoee, Florida

Plans Prepared By:
CPH, Inc.
500 W. Fulton St. Sanford, FL 32771
Ph: 407.322.6841
Licenses:
Eng. C.O.A. No. 3215 *Arch. Lic. No. AA2600926*
Survey L.B. No. 7143 *Landscp. Lic. No. LC0000298*

JOSEPH M LOFASO, P.E.
FL P.E. No. 88718

Plan Sheet - Taylor St.

Sheet No.
19

Drawing name: J:\O6012\Roadway\Roadway\PLANR002.dwg Oct 16, 2023 - 9:50am jlofaso

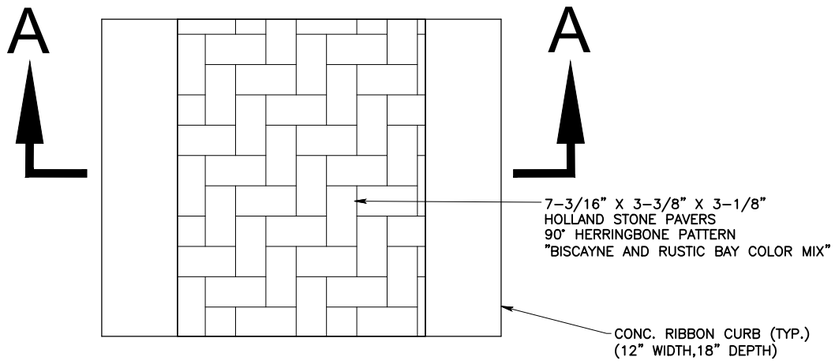

PLAN VIEW

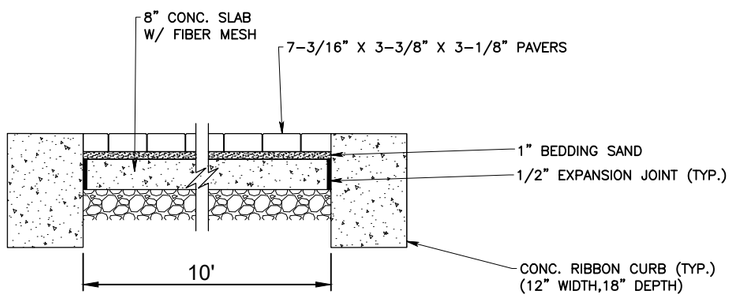

SECTION VIEW A-A

PAVER CROSSWALK DETAILS
(Not to Scale)

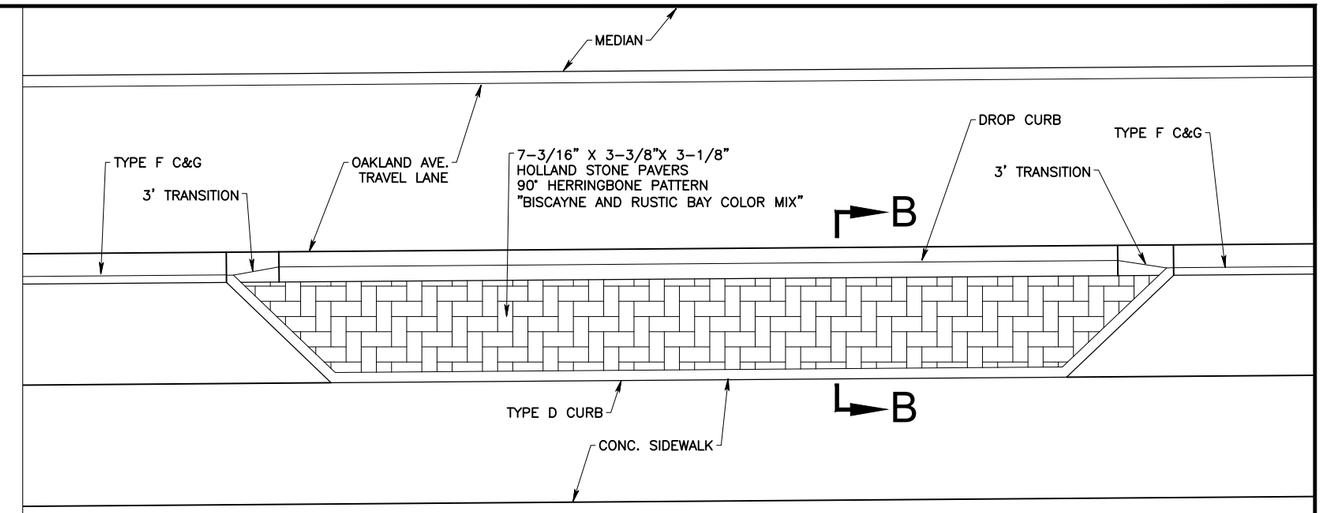

PAVER PARKING DETAIL - PLAN VIEW

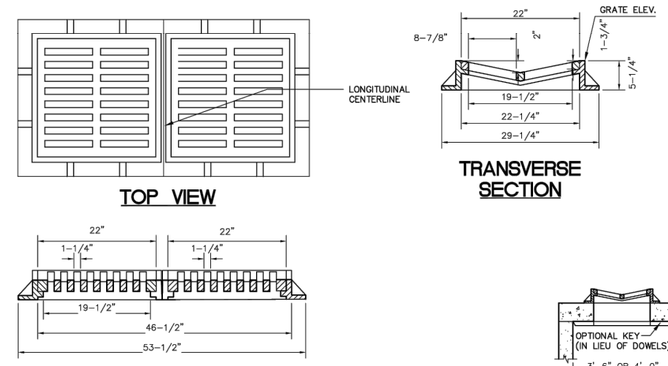

TOP VIEW

TRANSVERSE SECTION

LONGITUDINAL SECTION

SECTION AA

SECTION BB

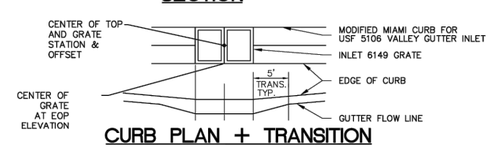

CURB PLAN + TRANSITION

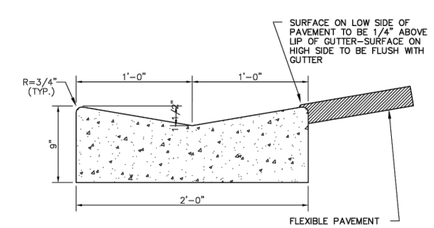

NOTES:

1. PROVIDE 1/8"-1/4" CONTRACTION JOINTS AT 10' CENTERS (MAXIMIUM) AND AT ALL POINTS OF TANGENT OF CURVES WHERE R<20'.
2. CONCRETE SHALL CONFORM TO F.D.O.T. CLASS 1 CONCRETE.
3. SEE F.D.O.T. INDEX 300 FOR OTHER NOTES.

NOTES:

1. THE INLET GRATE IS SUITABLE FOR PEDESTRIAN AND BICYCLE TRAFFIC.
2. INLET TO BE LOCATED OUTSIDE PEDESTRIAN CROSSWALK WHERE PRACTICAL.
3. FOR STRUCTURE BOTTOMS SEE F.D.O.T. INDEX NO. 200. FOR SUPPLEMENTAL DETAILS SEE F.D.O.T. INDEX NO. 201.
4. ALL STEEL IN SLAB TOPS SHALL HAVE 1-1/4" MINIMUM COVER UNLESS OTHERWISE SHOWN. TOPS SHALL BE EITHER CAST-IN-PLACE OR PRECAST CONCRETE.
5. FOR ALTERNATE B APPLICATIONS, TOP SLAB OPENINGS SHALL BE PLACED SUCH THAT 2 EDGES OF INLET FRAME WILL BE LOCATED DIRECTLY ABOVE THE BOTTOM.
6. WHEN USED ON A STRUCTURE WITH DIMENSIONS LARGER THAN THOSE DETAIL ABOVE AND RISERS ARE NOT APPLIED, THE TOP SLAB SHALL BE CONSTRUCTED USING F.D.O.T. INDEX NO. 200 WITH THE SLAB OPENING ADJUSTED TO 24"-36". THE "SPECIAL TOP SLAB" ON F.D.O.T. INDEX NO. 200 IS NOT PERMITTED.
7. FRAME MAY BE ADJUSTED WITH ONE TO SIX COURSES OF BRICK.
8. INLET AND GRATE DETAIL SHOWN IS U.S. FOUNDRY 5106 FRAME & 6149 GRATE WITH APPROXIMATELY EQUAL OPENINGS WILL BE PERMITTED THAT SATISFY AASHTO H-20, LOADING. INLET AND GRATE SHALL BE CLASS 30 CASTINGS IN ACCORDANCE WITH ASTM-A48.

VALLEY GUTTER INLET
(TYPE 1)

No.	Date	Revision	By	No.	Date	Revision	By
1				1			
2				2			
3				3			
4				4			

cph — www.cphcorp.com

A Full Service A & E Firm: Architects, Engineers, Environmental, Landscape Architects, M/E/P, Planners, Surveyors, Traffic/Transportation

Offices In: • Florida • Puerto Rico • Connecticut • Maryland • Texas

Designed by:		Date: 10/16/2023	
Drawn by:		Scale: AS NOTED	
Checked by:			
Approved by:			
Job No.		©2023	

Oakland Ave.
City of Ocoee, Florida

Plans Prepared By:
CPH, Inc.
500 W. Fulton St. Sanford, FL 32771
Ph: 407.322.6841
Licenses:
Eng. C.O.A. No. 3215 Arch. Lic. No. AA2600926
Survey L.B. No. 7143 Landscp. Lic. No. LC0000298

JOSEPH M LOFASO, P.E.
FL P.E. No. 88718

General Detail Sheet

Sheet No. *20*

Drawing name: J:\O60129\Roadway\Roadway\OTLR\D02.dwg Oct 16, 2023 - 9:50am jlofaso

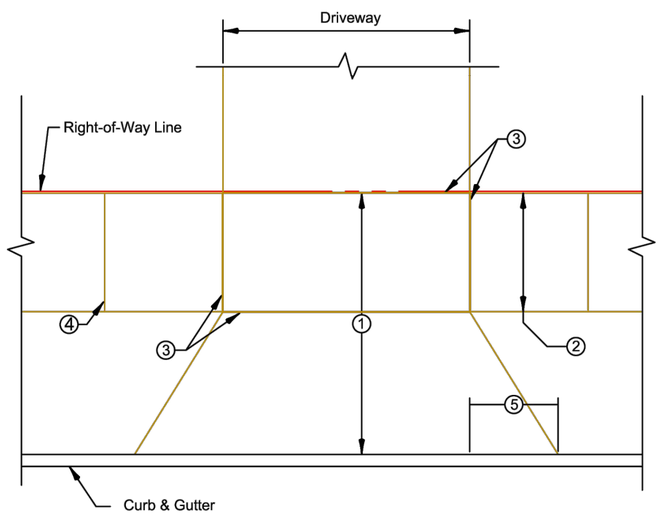

Legend

1. Driveway: approach and sidewalk 6" Thick - fc' = 3,000 psi @ 28 days, fiber reinforced concrete
2. Sidewalk: 4" Thick - fc' = 3,000 psi @ 28 days
3. Expansion Joint: bituminous fiber board material 1/2" thick and full depth
4. Construction Joint: tooled, dummy or sawed (1" depth minimum, spacing equal width of sidewalk)
5. Approach Transition: Flair Curb shall be dropped if not mountable

Notes:

Curb shall be dropped through driveway with 3' transitions each end of driveway for non-mountable curb.

All wooden stakes used in form work if left in place, shall have 2" or more of concrete cover.

DETAIL NO.	CITY OF OCOEE CONSTRUCTION DETAILS
PW003	Driveway Approach
DATE: July 2022	SCALE: N/A

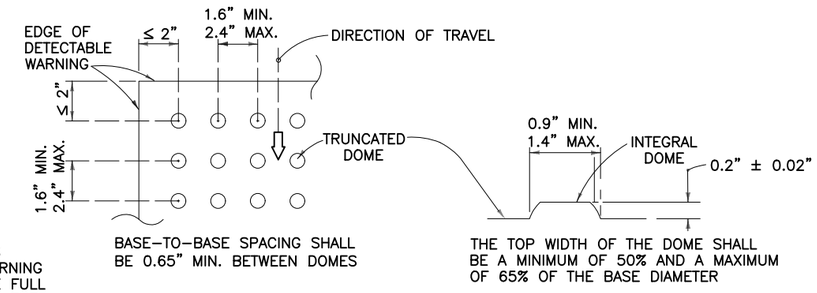

*ALL SIDEWALK CURB RAMPS SHALL HAVE DETECTABLE WARNING SURFACES THAT EXTEND THE FULL WIDTH OF THE RAMP AND IN THE DIRECTION OF TRAVEL 24" FROM BACK OF CURB

PLAN VIEW

NOTES:

1. DETECTABLE WARNING SURFACES AND THEIR PLACEMENT SHALL COMPLY WITH FDOT STANDARD STANDARD PLAN 522–002 (F.Y. 20–21) AND SHALL BE MECHANICALLY FASTENED BY 3/8"x3.5" HOT–DIPPED, GALVANIZED SLEEVE ANCHORS AT 2 ANCHORS PER SQUARE FOOT. EXTERIOR CONSTRUCTION ADHESIVE MAY ONLY BE USED AS A SECONDARY BONDING AGENT.

CURB RAMP DETECTABLE WARNING DETAIL
(N.T.S)

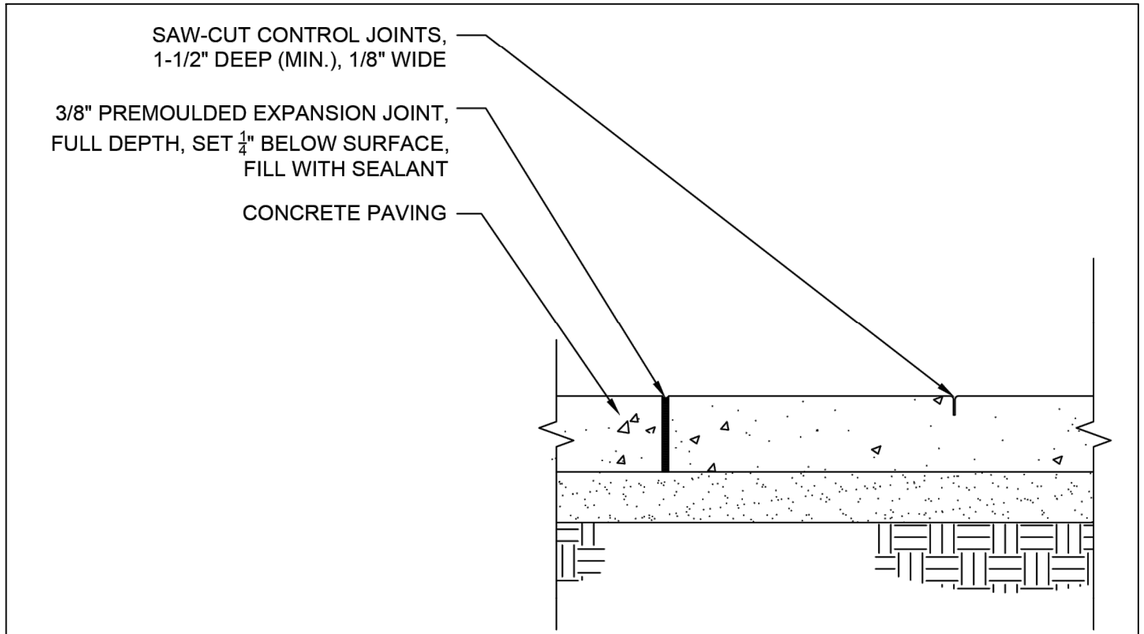

CONCRETE TRAIL JOINT DETAILS
(N.T.S)

No.	Date	Revision	By	No.	Date	Revision	By
1				1			
2				2			
3				3			
4				4			

cph — www.cphcorp.com — A Full Service A & E Firm: Architects, Engineers, Environmental, Landscape Architects, M/E/P, Planners, Surveyors, Traffic/Transportation. Offices In: • Florida • Puerto Rico • Connecticut • Maryland • Texas

Designed by:		Date: 10/16/2023	
Drawn by:		Scale: AS NOTED	
Checked by:			
Approved by:			
Job No.		©2023	

Oakland Ave.
City of Ocoee, Florida

Plans Prepared By: CPH, Inc. 500 W. Fulton St. Sanford, FL 32771 Ph: 407.322.6841 Licenses: Eng. C.O.A. No. 3215 Arch. Lic. No. AA2600926 Survey L.B. No. 7143 Landscp. Lic. No. LC0000298

JOSEPH M LOFASO, P.E.
FL P.E. No. 88718

General Detail Sheet

Sheet No. *21*

Drawing name: J:\OCI\12\Roadway\Roadway\DTLR002.dwg Oct 16, 2023 - 9:50am jlofaso

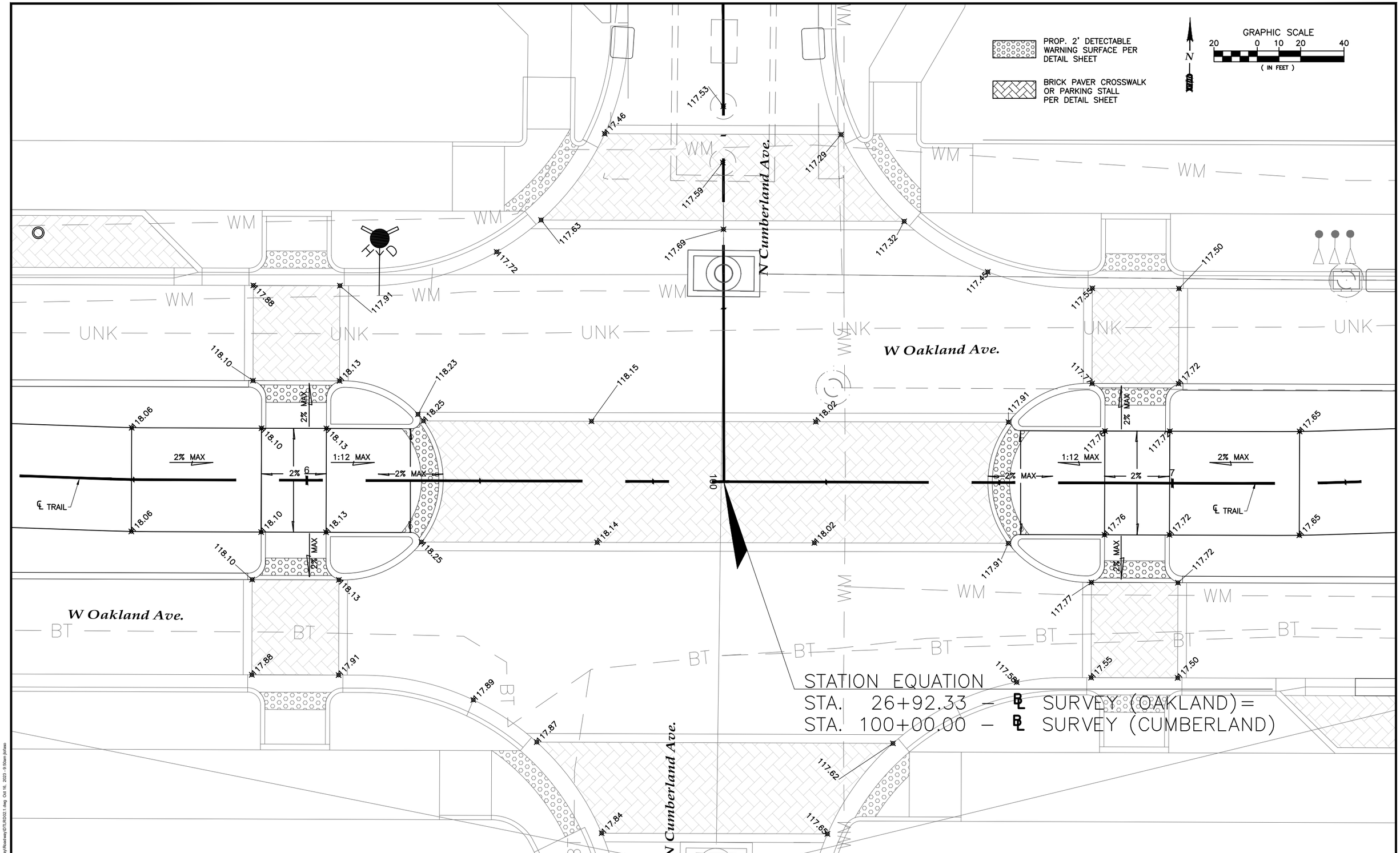

No.	Date	Revision	By	No.	Date	Revision	By
1				1			
2				2			
3				3			
4				4			

cph — www.cphcorp.com

A Full Service A & E Firm
Architects, Engineers, Environmental, Landscape Architects, M/E/P, Planners, Surveyors, Traffic/Transportation

Offices In: • Florida • Puerto Rico • Connecticut • Maryland • Texas

Designed by:	CJT	Date: 10/16/2023
Drawn by:	AM/CJT	Scale: AS NOTED
Checked by:	KRL	
Approved by:	JML	
Job No.	O6012	©2023

Oakland Ave.
City of Ocoee, Florida

Plans Prepared By:
CPH, Inc.
500 W. Fulton St. Sanford, FL 32771
Ph: 407.322.6841
Licenses:
Eng. C.O.A. No. 3215 *Arch. Lic. No. AA2600926*
Survey L.B. No. 7143 *Landscp. Lic. No. LC0000298*

JOSEPH M LOFASO, P.E.
FL P.E. No. 88718

Median Crossing Detail

Sheet No.
22

Drawing name: J:\O6012\Roadway\Roadway\DTLR\D02.1.dwg Oct 16, 2023 - 9:50am jlofaso

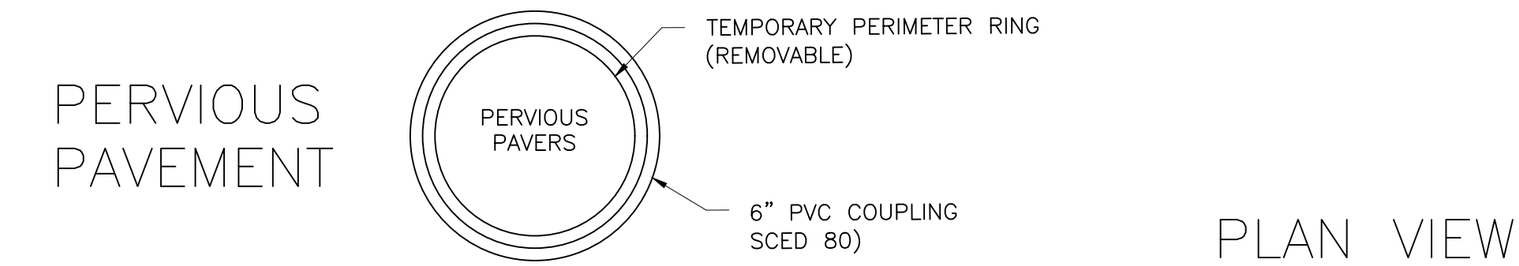

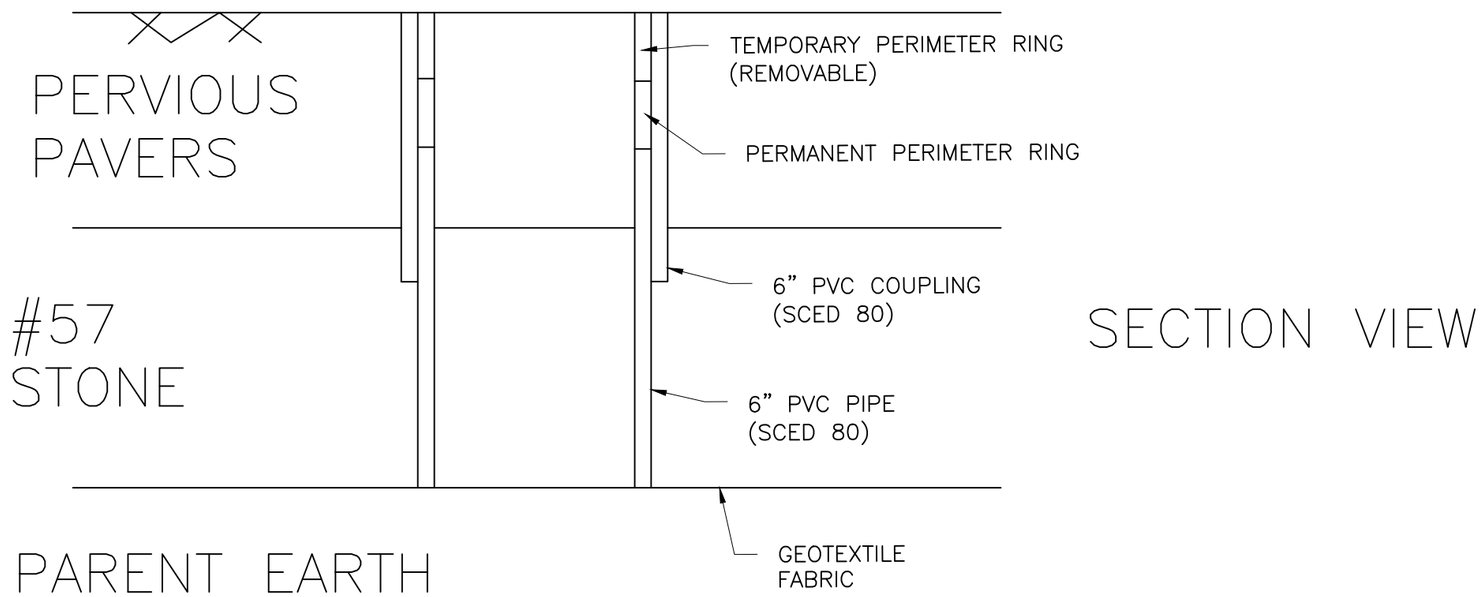

IN-SITU INFILTROMETER

NOT TO SCALE

No.	Date	Revision	By	No.	Date	Revision	By
1				4			
2				5			
3				6			

cph — www.cphcorp.com

A Full Service A & E Firm: Architects, Engineers, Environmental, Landscape Architects, M/E/P, Planners, Surveyors, Traffic/Transportation

Offices In: • Florida • Puerto Rico • Connecticut • Maryland • Texas

Designed by:	CJT	Date: 10/16/2023
Drawn by:	AM/CJT	Scale: AS NOTED
Checked by:	KRL	
Approved by:	JML	
Job No.	O6012	©2023

Oakland Ave.
City of Ocoee, Florida

Plans Prepared By: CPH, Inc.
500 W. Fulton St. Sanford, FL 32771
Ph: 407.322.6841
Licenses: Eng. C.O.A. No. 3215 Arch. Lic. No. AA2600926 Survey L.B. No. 7143 Landscp. Lic. No. LC0000298

JOSEPH M LOFASO, P.E.
FL P.E. No. 88718

In-Situ Infiltrometer Detail

Sheet No. 23

Drawing name: J:\O6012\Roadway\Roadway\GNRL\DTL.dwg Oct 16, 2023 - 9:51am jlofaso

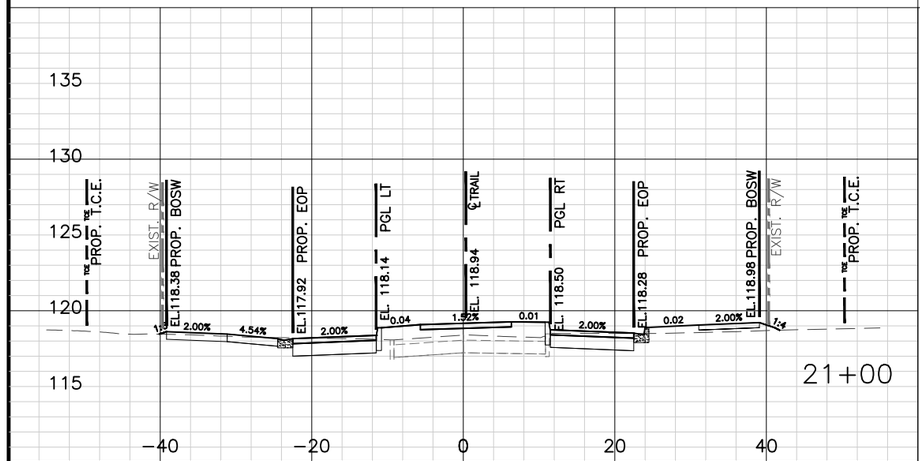

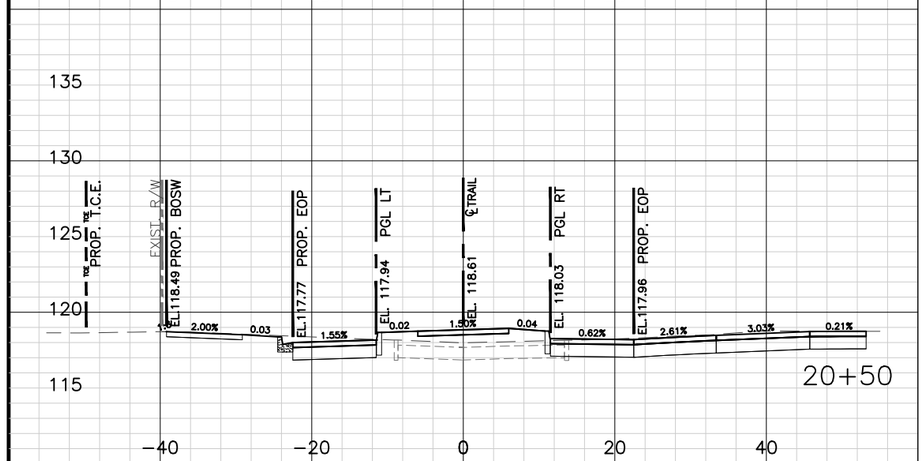

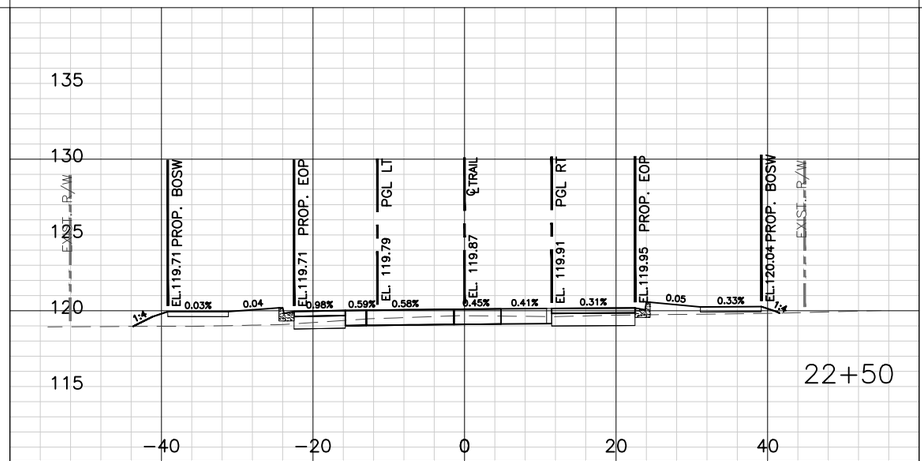

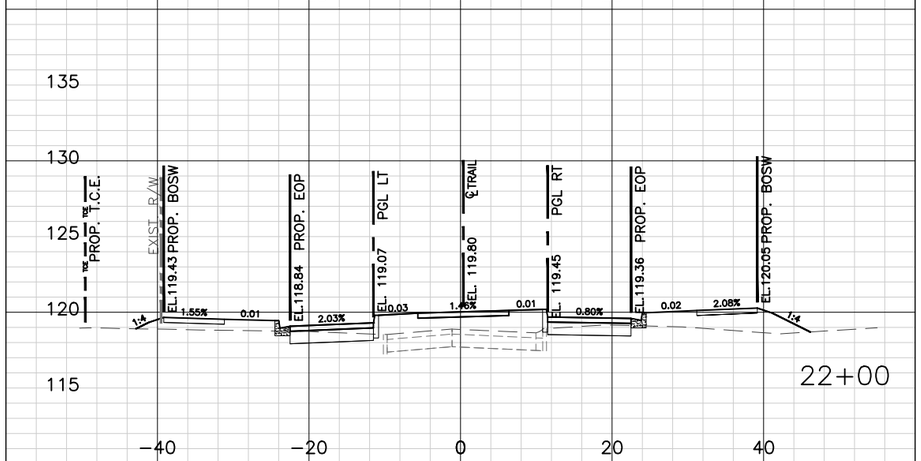

	Regular Exc. A	Regular Exc. V	Embankment A	Embankment V
21+00	47	120	5	5
20+50	83	76	0	0
20+00	0	0	0	0
TOTAL –	196		5	

	Regular Exc. A	Regular Exc. V	Embankment A	Embankment V
22+50	13	48	22	49
22+00	39	94	31	37
21+50	63	102	8	12
TOTAL –	244		98	

No.	Date	Revision	By	No.	Date	Revision	By
1				1			
2				2			
3				3			
4				4			

cph — www.cphcorp.com

A Full Service A & E Firm
Architects, Engineers, Environmental, Landscape Architects, M/E/P, Planners, Surveyors, Traffic/Transportation

Offices In: • Florida • Puerto Rico • Connecticut • Maryland • Texas

Designed by:	CJT	Date: 10/16/2023
Drawn by:	AM/CJT	Scale: AS NOTED
Checked by:	KRL	
Approved by:	JML	
Job No.	O6012	©2023

Oakland Ave.
City of Ocoee, Florida

Plans Prepared By:
CPH, Inc.
500 W. Fulton St. Sanford, FL 32771
Ph: 407.322.6841
Licenses:
Eng. C.O.A. No. 3215 *Arch. Lic. No. AA2600926*
Survey L.B. No. 7143 *Landscp. Lic. No. LC0000298*

JOSEPH M LOFASO, P.E.
FL P.E. No. 88718

Oakland Ave.
Cross Sections

Sheet No.
24

Drawing name: J:\O6012\Roadway\Roadway\RDWSR0201 - Static.dwg Oct 16, 2023 - 9:51 am jlofaso

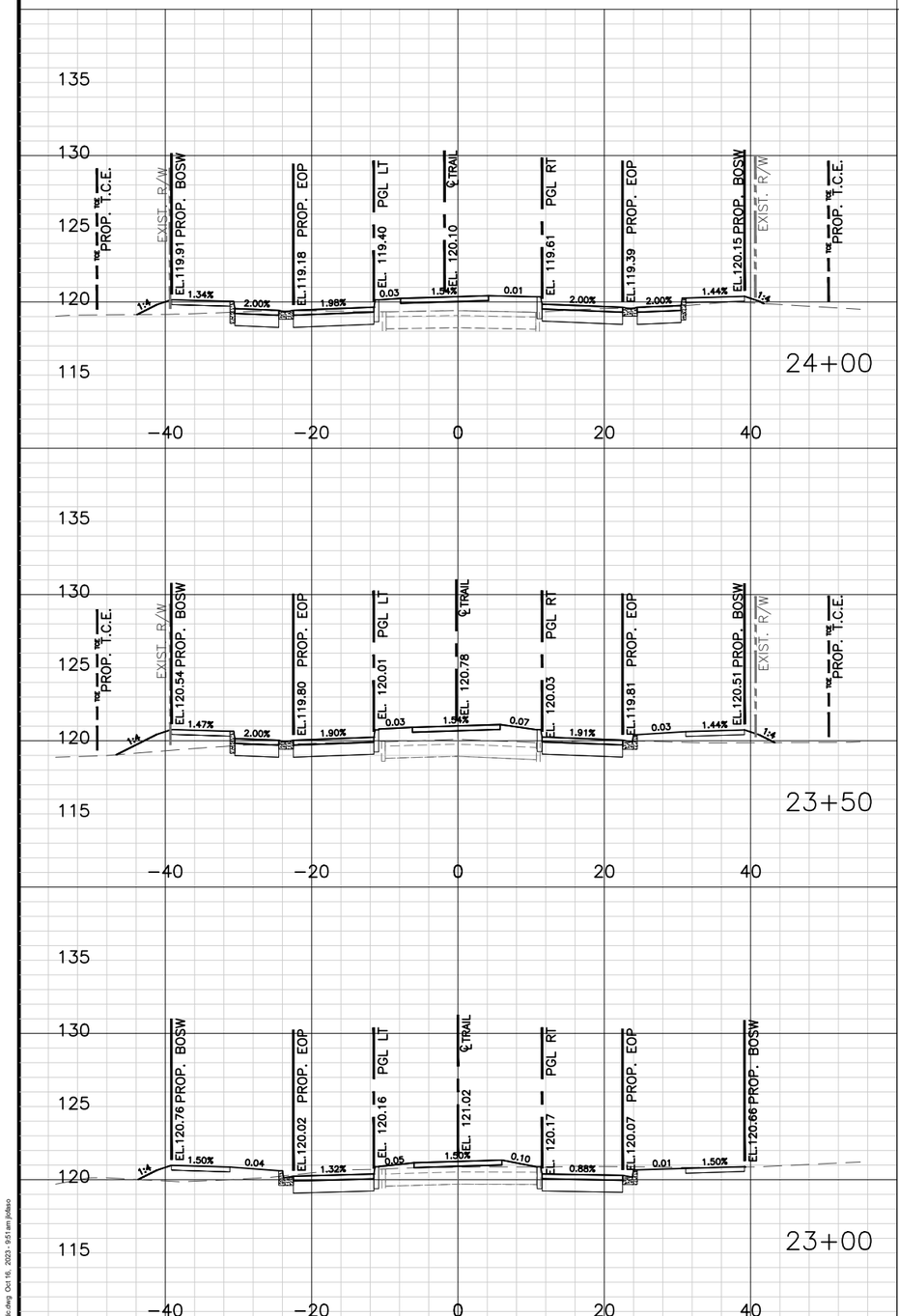

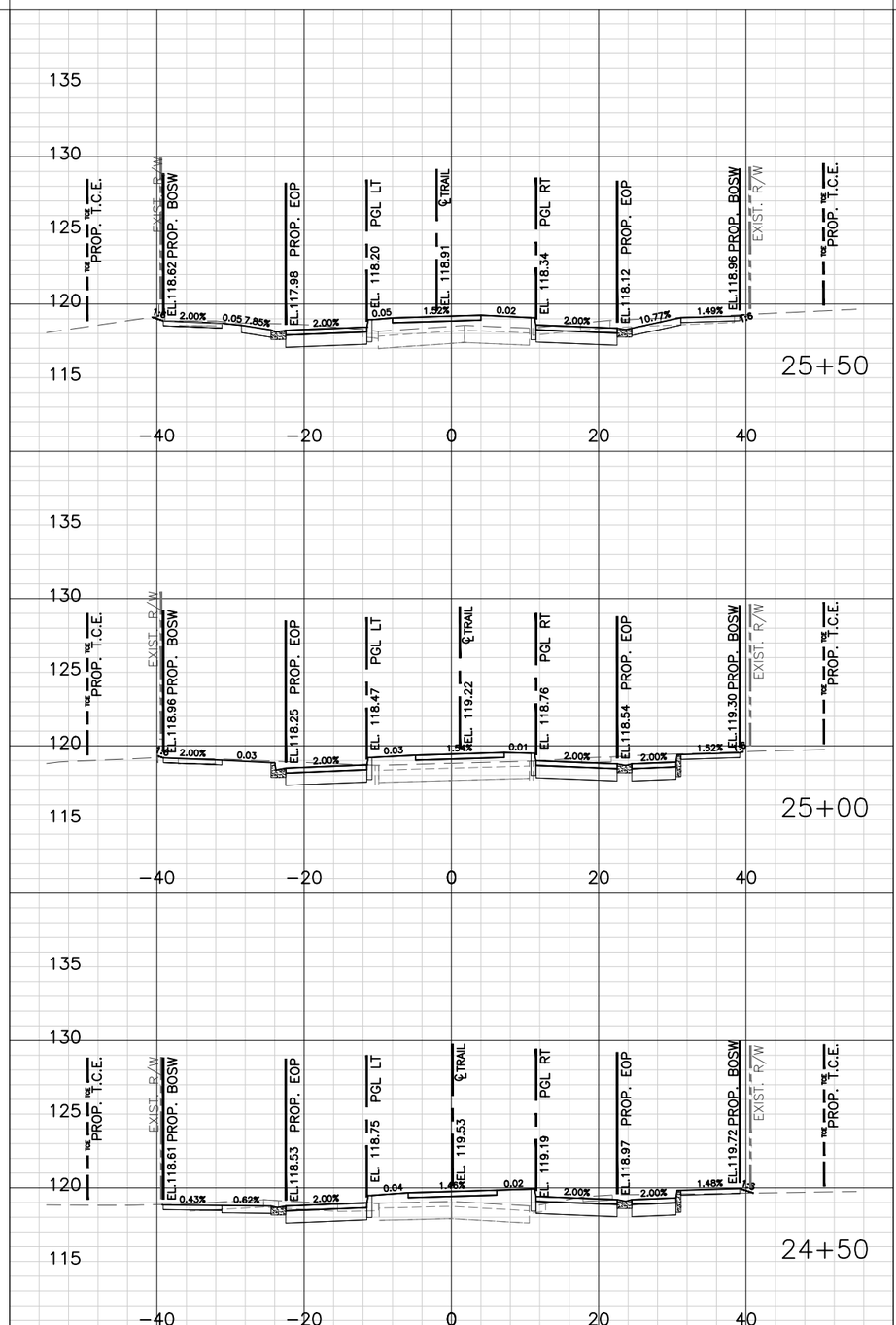

	Regular Exc. A	Regular Exc. V	Embankment A	Embankment V
24+00	58	95	4	21
23+50	44	85	18	29
23+00	47	56	13	32
TOTAL –	236		82	

	Regular Exc. A	Regular Exc. V	Embankment A	Embankment V
25+50	35	89	0	0
25+00	61	128	0	0
24+50	77	125	0	4
TOTAL –	342		4	

No.	Date	Revision	By	No.	Date	Revision	By
1				1			
2				2			
3				3			
4				4			

cph A Full Service A & E Firm
Architects M/E/P Engineers Planners Environmental Surveyors Landscape Architects Traffic/Transportation
www.cphcorp.com

Offices In: • Florida • Puerto Rico • Connecticut • Maryland • Texas

Designed by:	CJT	Date: 10/16/2023
Drawn by:	AM/CJT	Scale: AS NOTED
Checked by:	KRL	
Approved by:	JML	
Job No.	O6012	©2023

Oakland Ave.
City of Ocoee, Florida

Plans Prepared By: CPH, Inc.
500 W. Fulton St. Sanford, FL 32771
Ph: 407.322.6841
Licenses:
Eng. C.O.A. No. 3215 Arch. Lic. No. AA26000926
Survey L.B. No. 7143 Landscp. Lic. No. LC0000298

JOSEPH M LOFASO, P.E.
FL P.E. No. 88718

Oakland Ave.
Cross Sections

Sheet No. 25

Drawing name: J:\O6012\Roadway\Roadway\RDWS\RD01 - Static.dwg Oct 16, 2023 - 9:51 am jlofaso

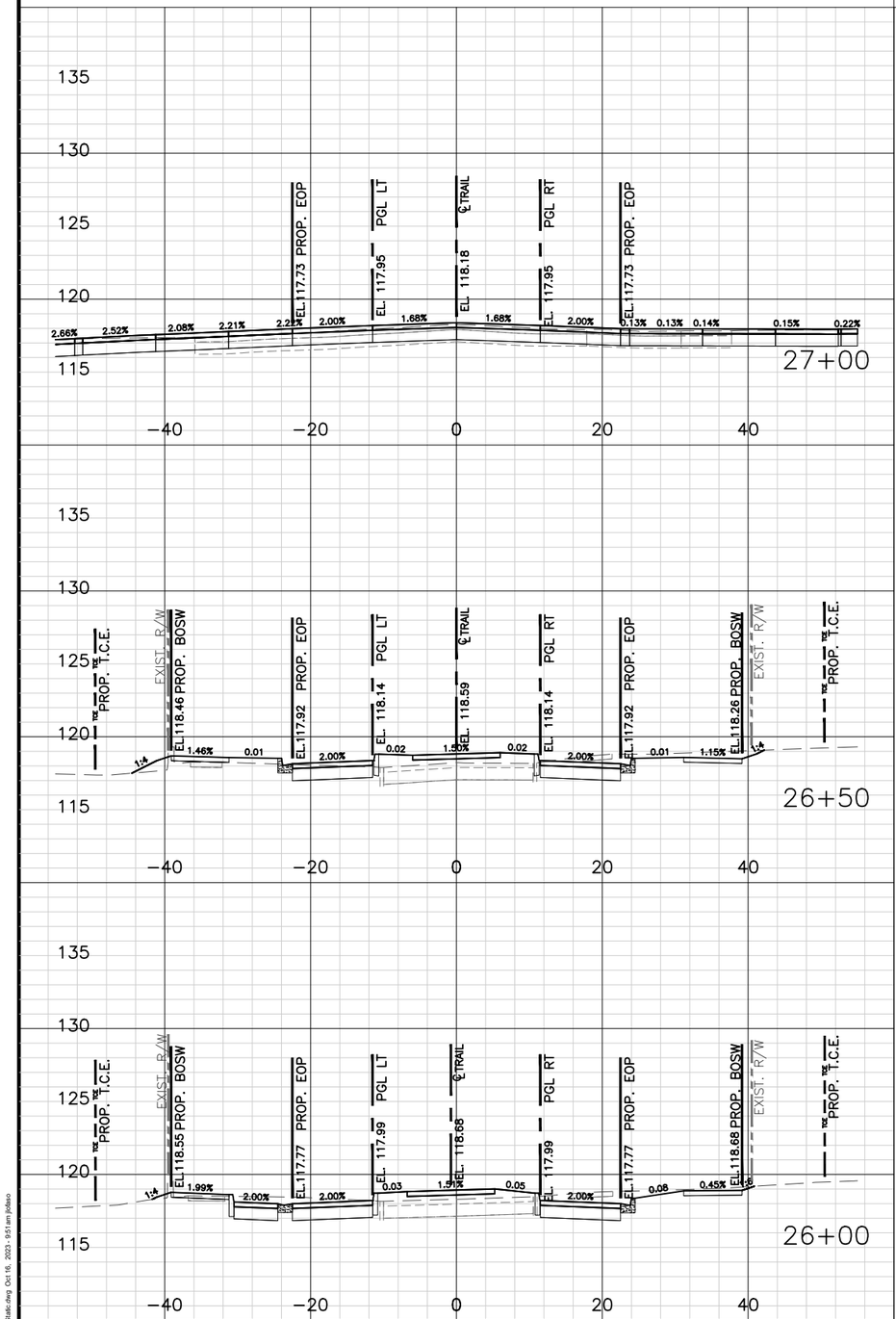

	Regular Exc. A	Regular Exc. V	Embankment A	Embankment V
27+00	0	43	0	2
26+50	45	95	4	4
26+00	58	86	0	0
TOTAL –		224		6

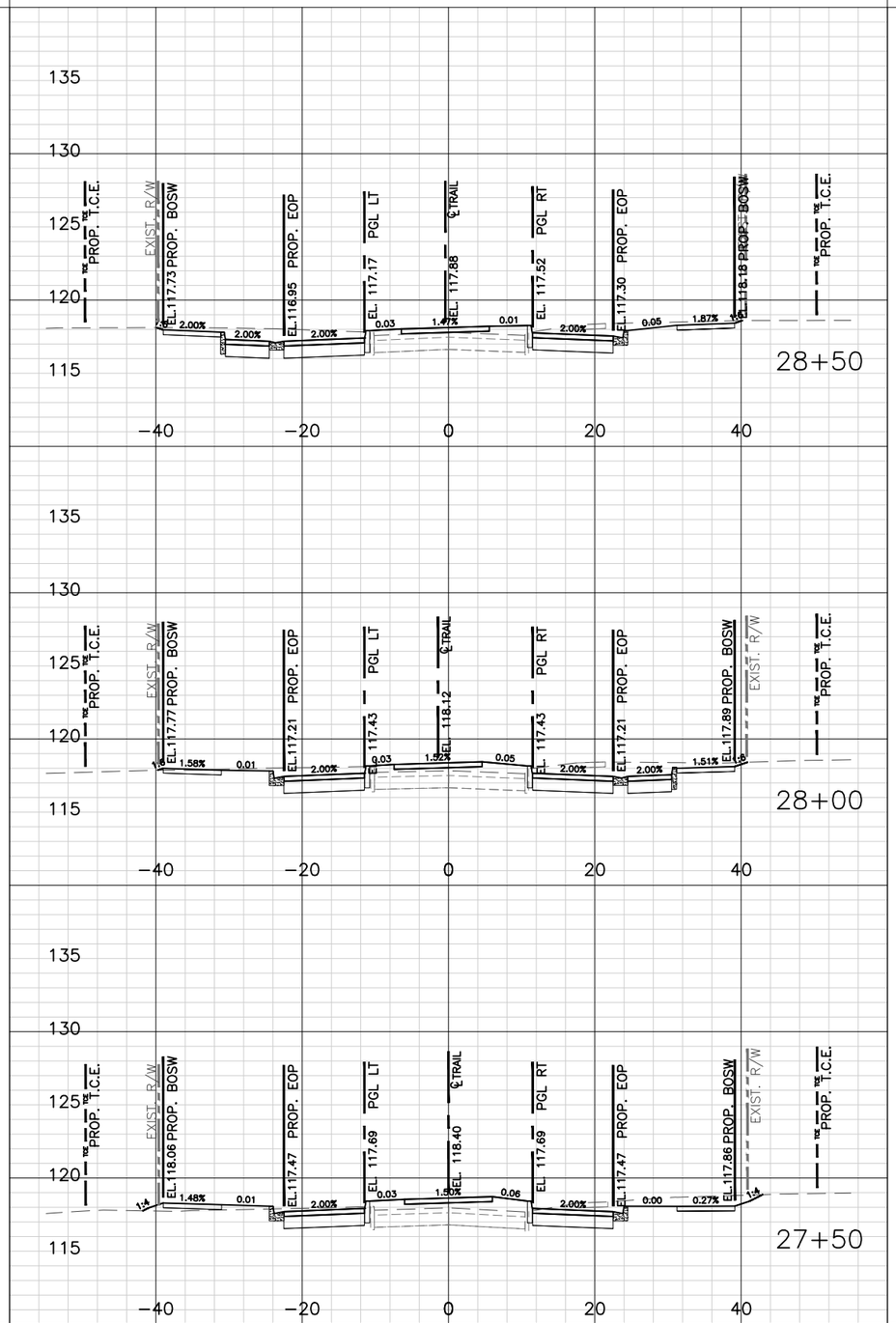

	Regular Exc. A	Regular Exc. V	Embankment A	Embankment V
28+50	70	132	0	0
28+00	72	118	0	0
27+50	55	51	4	4
TOTAL –		301		4

No.	Date	Revision	By	No.	Date	Revision	By
1				1			
2				2			
3				3			
4				4			

cph — www.cphcorp.com

A Full Service A & E Firm
Architects, Engineers, Environmental, Landscape Architects, M/E/P, Planners, Surveyors, Traffic/Transportation

Offices In: • Florida • Puerto Rico • Connecticut • Maryland • Texas

Designed by:	CJT	Date: 10/16/2023	
Drawn by:	AM/CJT	Scale: AS NOTED	
Checked by:	KRL		
Approved by:	JML		
Job No.	O6012	©2023	

Oakland Ave.
City of Ocoee, Florida

Plans Prepared By:
CPH, Inc.
500 W. Fulton St. Sanford, FL 32771
Ph: 407.322.6841
Licenses:
Eng. C.O.A. No. 3215 *Arch. Lic. No. AA2600926*
Survey L.B. No. 7143 *Landscp. Lic. No. LC0000298*

JOSEPH M LOFASO, P.E.
FL P.E. No. 88718

Oakland Ave.
Cross Sections

Sheet No.
26

Drawing name: J:\O6012\Roadway\Roadway\RDX05R001 - Static.dwg Oct 16, 2023 - 9:51 am jlofaso

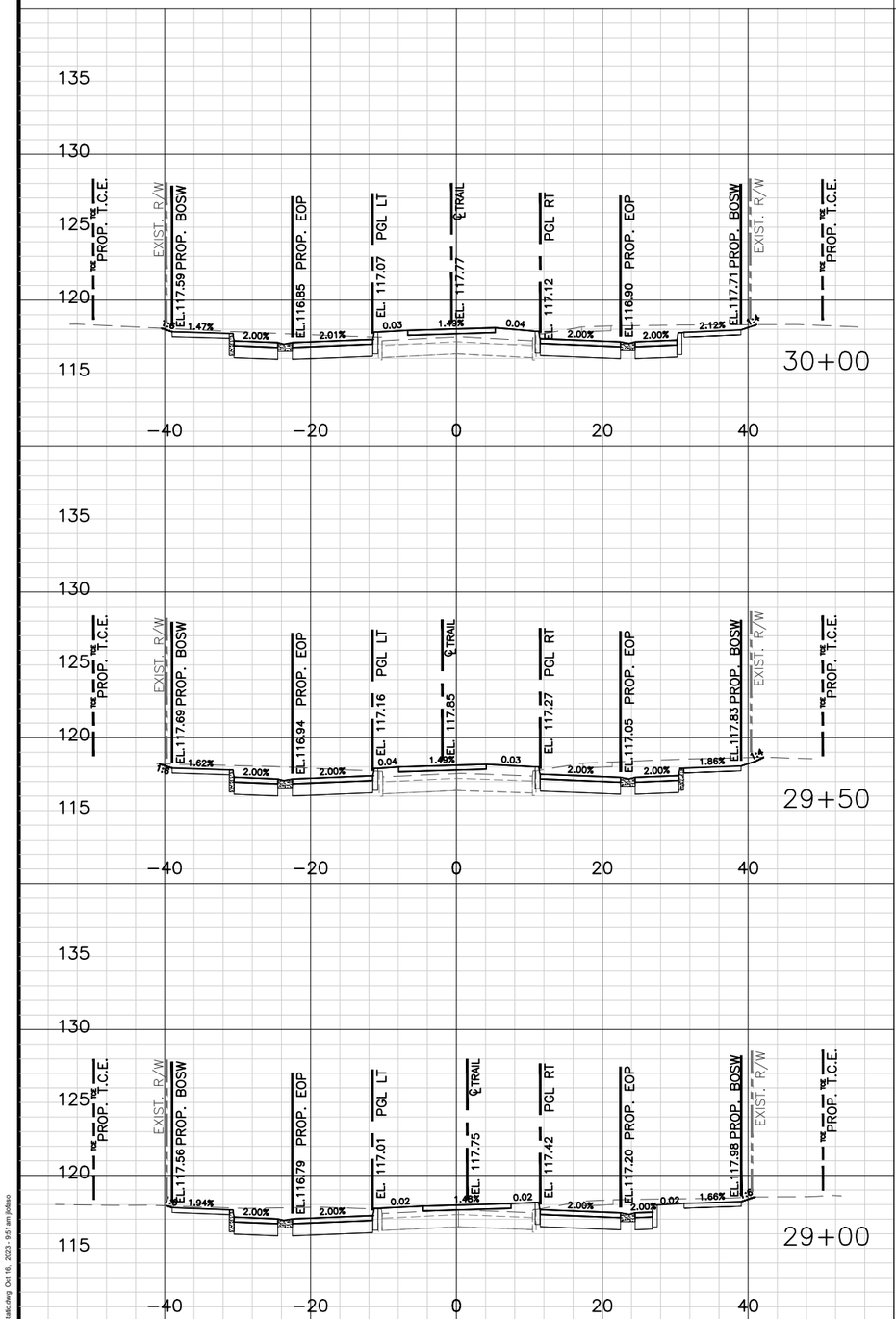

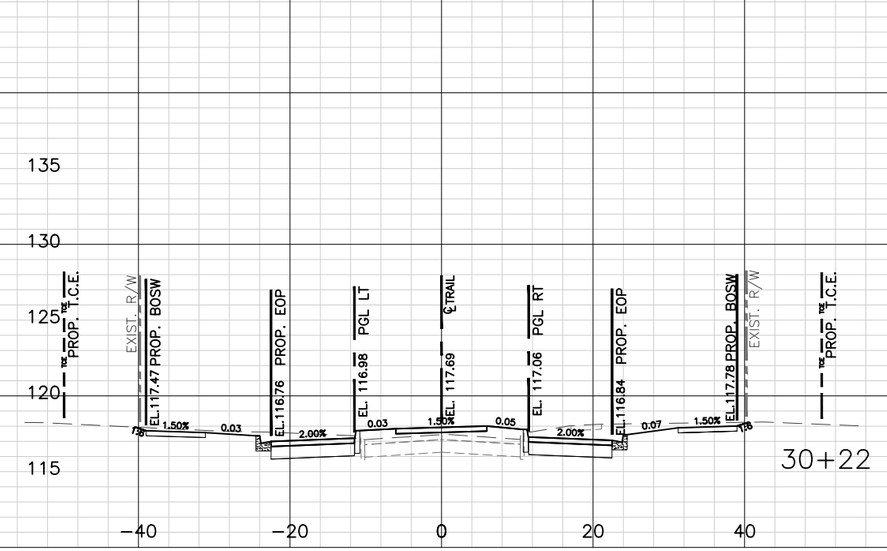

	Regular Exc. A	Regular Exc. V	Embankment A	Embankment V
30+00	88	190	0	0
29+50	117	206	0	0
29+00	105	163	0	0
30+22	61	60	0	0
TOTAL –		559		0
TOTAL –		60		0

WEST OAKLAND AVENUE RECONSTRUCTION EARTHWORK:

REGULAR EXCAVATION = 2,162 C.Y.

EMBANKMENT = 199 C.Y.

No.	Date	Revision	By	No.	Date	Revision	By
1				1			
2				2			
3				3			
4				4			

cph — www.cphcorp.com

A Full Service A & E Firm

Architects, Engineers, Environmental, Landscape Architects, M/E/P, Planners, Surveyors, Traffic/Transportation

Offices In: • Florida • Puerto Rico • Connecticut • Maryland • Texas

Designed by:	CJT	Date: 10/16/2023	
Drawn by:	AM/CJT	Scale: AS NOTED	
Checked by:	KRL		
Approved by:	JML		
Job No.	O6012	©2023	

Oakland Ave.
City of Ocoee, Florida

Plans Prepared By:
CPH, Inc.
500 W. Fulton St. Sanford, FL 32771
Ph: 407.322.6841
Licenses:
Eng. C.O.A. No. 3215 *Arch. Lic. No. AA26000926*
Survey L.B. No. 7143 *Landscp. Lic. No. LC0000298*

JOSEPH M LOFASO, P.E.
FL P.E. No. 88718

Oakland Ave.
Cross Sections

Sheet No.
27

Drawing name: J:\O6012\Roadway\Roadway\RDX\SR2011 - State.dwg Oct 16, 2023 - 9:51 am jlofaso

THE FOLLOWING NARRATIVE OF THE STORMWATER POLLUTION PREVENTION PLAN (LATEST EDITION) CONTAINS REFERENCES TO THE FDOT STANDARD SPECIFICATIONS FOR ROAD AND BRIDGE CONSTRUCTION, THE FDOT DESIGN STANDARDS (LATEST EDITION), AND OTHER SHEETS OF THESE CONSTRUCTION PLANS. THE FIRST SHEET OF THE CONSTRUCTION PLANS (CALLED THE KEY SHEET) CONTAINS AN INDEX TO THE OTHER SHEETS. THE COMPLETE STORMWATER POLLUTION PREVENTION PLAN INCLUDES SEVERAL ITEMS: THIS NARRATIVE DESCRIPTION, THE DOCUMENTS REFERENCED IN THE NARRATIVE, THE CONTRACTOR'S APPROVED EROSION CONTROL PLAN REQUIRED BY FDOT EROSION AND SEDIMENT CONTROL MANUAL, FDOT SPECIFICATION SECTION 104, AND REPORTS OF INSPECTION MADE DURING CONSTRUCTION.

I. SITE DESCRIPTION

THIS PROJECT IS LOCATED IN THE CITY OF OCOEE, ORANGE COUNTY, FLORIDA, AT SECTION 17 – TOWNSHIP 22 SOUTH – RANGE 28 EAST. THE PROJECT INCLUDES THE LENGTH OF OAKLAND AVE. BETWEEN THE INTERSECTIONS OF BLUFORD AVE. AND TAYLOR ST., FOR A TOTAL PROJECT LENGTH OF 0.2034 MILES.

THE PROJECT BEGINS ON THE WESTERN CURB RETURNS OF THE INTERSECTION OF BLUFORD AVE. AND OAKLAND AVENUE AND EXTENDS TO THE EASTERN CURB RETURNS OF THE INTERSECTION OF TAYLOR ST. AND OAKLAND AVENUE.

CPH, INC. HAS PREPARED CONSTRUCTION PLANS FOR THE CITY OF OCOEE THAT INCLUDES, BUT IS NOT LIMITED TO: PROPOSED ROADWAY, CURB AND GUTTER, SIDEWALK, STORM DRAINAGE, AND EROSION CONTROL.

A. NATURE OF CONSTRUCTION ACTIVITY

THIS PROJECT CONSISTS OF REMOVAL AND RE–CONSTRUCTION OF THE EXISTING ROADWAY AND THE REMOVAL AND EXPANSION OF EXISTING SIDEWALKS. THERE IS ALSO DRAINAGE CONSTRUCTION.

B. MAJOR SOIL DISTURBING ACTIVITIES

THE MAJOR SOIL DISTURBING ACTIVITIES INCLUDE THE FOLLOWING:

1. CLEAR AND GRUB WITHIN THE LIMITS OF CONSTRUCTION. (WITH THE EXCEPTION OF TREES AS NOTED IN THE PLANS AND GENERAL NOTES).
2. CLEARING AND GRUBBING, EARTHWORK EXCAVATION AND EMBANKMENT, AND STORM CULVERT CONSTRUCTION
3. EARTHWORK ASSOCIATED WITH THE CONSTRUCTION OF ROADWAY AND SIDEWALKS.
4. PROVIDE FINAL GRADING FOR LANDSCAPING WITHIN THE CONSTRUCTION AREAS.

C. PROJECT AREA

TOTAL PROJECT AREA = 2.07 ACRES
DISTURBED AREA = 2.07 ACRES

D. RUNOFF DATA

E. EXISTING SOIL OR WATER QUALITY DISCHARGE DATA

SOILS

- THE U.S.D.A. SOIL SURVEY OF ORANGE COUNTY, FLORIDA IDENTIFIES TWO (2) SOIL TYPES AS OCCURRING ON THE SUBJECT PROJECT AREA. A SUMMARY OF THE CHARACTERISTICS OF THESE SOIL TYPES, AS DESCRIBED BY THE NATURAL RESOURCE CONSERVATION SERVICE (NRCS, FORMERLY SOIL CONSERVATION SERVICE (SCS)) SOIL SURVEY
- GEOGRAPHIC (SSURGO) DATABASE FOR FLORIDA ARE AS FOLLOWS:
- TAVARES FINE SAND
- ZOLFO FINE SAND

DRAINAGE AREA FOR EACH OUTFALL

RUNOFF THROUGHOUT THE PROJECT IS CONVEYED BY A COMBINATION OF PROPOSED AND EXISTING INLETS, STORM SEWER PIPES TO STARKE LAKE

D. SITE MAP

THE CONSTRUCTION PLANS ARE BEING USED AS THE SITE MAPS.

E. RECEIVING WATERS

RUNOFF FROM DRAINAGE BASINS WITHIN THE PROJECT AREA TO BE DISCHARGED INTO EXISTING STORM SYSTEM.

II. CONTROLS

SEQUENCE OF SOIL DISTURBING ACTIVITIES AND IMPLEMENTATION OF CONTROLS:

1. INSTALLATION OF EROSION AND SEDIMENTATION PERIMETER CONTROLS AS SPECIFIED IN THE PLANS AND THE CONTRACTOR'S APPROVED EROSION CONTROL PLAN.
2. CLEAR AND GRUB WITHIN LIMITS OF CONSTRUCTION.
3. CONSTRUCT DRAINAGE, STABILIZATION, BASE, ROADWAY SURFACE, DRIVEWAYS, SIDEWALKS & CURB AND GUTTER.
4. PROVIDE FINAL GRADING FOR CONSTRUCTION AREAS.
5. INSTALL FINAL SODDING AND LANDSCAPING.
6. REMOVE ALL EROSION AND SEDIMENT CONTROLS.

THE CONTRACTOR, WITH THE ENGINEER'S APPROVAL, MAY MODIFY THE SEQUENCE OF CONSTRUCTION. THE CONTRACTOR IS RESPONSIBLE FOR DOCUMENTING THIS PORTION OF THE STORMWATER POLLUTION PREVENTION PLAN IN THE SECTION 104 EROSION CONTROL PLAN.

ALL CONTROLS SHALL BE CONSISTENT WITH THE PERFORMANCE STANDARDS FOR EROSION AND SEDIMENT CONTROL AND STORMWATER TREATMENT AS SET FORTH IN RULE 62–40.432, F.A.C., THE APPLICABLE ENVIRONMENTAL RESOURCE PERMITTING REQUIREMENTS OF THE FDEP AND/OR THE ST. JOHN'S RIVER WATER MANAGEMENT DISTRICT (SJRWMD), AND THE GUIDELINES CONTAINED IN THE FLORIDA DEVELOPMENT MANUAL: A GUIDE TO SOUND LAND AND WATER MANAGEMENT (FDEP, 1988) AND ANY SUBSEQUENT AMENDMENTS.

TEMPORARY STABILIZATION:

DISTURBED PORTIONS OF THE SITE (E.G., EMBANKMENTS, DITCHES, AND SWALES) SHALL BE STABILIZED WITH TEMPORARY GRASSING AS SOON AS PRACTICABLE, BUT IN NO CASE MORE THAN SEVEN (7) DAYS, IN PORTIONS OF THE SITE WHERE CONSTRUCTION ACTIVITIES HAVE TEMPORARILY OR PERMANENTLY CEASED.

II. CONTROLS – CONTINUED

PERMANENT STABILIZATION:

DISTURBED PORTIONS OF THE SITE WHERE CONSTRUCTION ACTIVITY PERMANENTLY CEASES SHALL BE STABILIZED WITH SOD AS SPECIFIED IN THE TYPICAL SECTION AS SOON AS PRACTICABLE, BUT IN NO CASE MORE THAN SEVEN (7) DAYS AFTER THE LAST CONSTRUCTION ACTIVITY.

A. EROSION AND SEDIMENT CONTROLS:

(I) STABILIZATION PRACTICES

- TEMPORARY SODDING
- TEMPORARY GRASSING
- X PERMANENT PLANTING, SODDING, OR SEEDING
- TEMPORARY MULCHING
- ARTIFICIAL COVERING
- BUFFER ZONES
- X PRESERVATION OF NATURAL RESOURCES
- OTHER

(II) STRUCTURAL PRACTICES:

- SAND BAGGING
- X SILT FENCES
- SYNTHETIC BALES
- BERMS
- DIVERSION INTERCEPTOR, OR PERIMETER DITCHES
- PIPE SLOPE DRAINS
- FLUMES
- ROCK BEDDING AT CONSTRUCTION EXIT
- TIMBER BEDDING AT CONSTRUCTION EXIT
- DITCH LINER
- SEDIMENT TRAPS
- SEDIMENT BASINS
- X STORM INLET SEDIMENT TRAP
- STONE OUTLET STRUCTURES
- CURB AND GUTTERS
- X STORM SEWERS
- VELOCITY CONTROL DEVICES
- TURBIDITY BARRIER
- RIP RAP
- DITCH BLOCK
- OTHER

WHEN A SEDIMENTATION TRAP OR BASIN IS NOT ATTAINABLE, THE ROADSIDE SWALE AND VEGETATED SWALE RETENTION AREAS MAY BE USED AS A TEMPORARY SEDIMENTATION BASIN DURING CONSTRUCTION IF THE ORIGINAL DESIGN FUNCTION AND CAPACITY OF THE SWALES ARE NOT COMPROMISED. BEFORE COMPLETION OF CONSTRUCTION, THE SEDIMENTS IN THE ROADSIDE SWALES SHALL BE REMOVED AND PERMANENT EROSION CONTROL SHALL BE IN PLACE SUCH AS SODDING OR SEED AND MULCH.

(III) NON–STORMWATER DISCHARGE (INCLUDING SPILL REPORTING)

NO NON–STORMWATER DISCHARGES ARE ANTICIPATED. WHEN THE CONTRACTOR ENCOUNTERS A SPILL, CONSTRUCTION WILL STOP AND WORK WILL NOT RESUME UNTIL DIRECTED BY THE CITY ENGINEER. DISPOSITION OF HAZARDOUS WASTE WILL BE MADE IN ACCORDANCE WITH ANY REQUIREMENTS AND REGULATIONS OF ANY LOCAL, STATE, OR FEDERAL AGENCY HAVING JURISDICTION. THE CONTRACTOR IS RESPONSIBLE FOR DOCUMENTING THIS PORTION OF THE SWPPP IN THE SECTION 104 EROSION CONTROL PLANS.

II. CONTROLS – CONTINUED

A. EROSION AND SEDIMENT CONTROLS: – CONTINUED

(IV) CONCRETE TRUCKS

CONCRETE TRUCKS WILL NOT BE ALLOWED TO WASH OUT OR DISCHARGE SURPLUS CONCRETE OR DRUM WASH INTO SWALES OR STORMWATER INLETS. CONTRACTOR SHALL COORDINATE WITH THE CITY ENGINEER OR AUTHORIZED REPRESENTATIVE TO DETERMINE APPROPRIATE WASH OUT AREA ON CITY PROPERTY. THE CONTRACTOR SHALL REMOVE WASHED OUT CONCRETE AND REPAIR AREA TO PRE–CONSTRUCTION CONDITION OR BETTER.

III. MAINTENANCE

THE CONTRACTOR SHALL BE RESPONSIBLE FOR MAINTAINING ALL POLLUTION PREVENTION CONTROLS. DAILY INSPECTIONS SHALL BE MADE BY THE CONTRACTOR TO DETERMINE THE EFFECTIVENESS OF EROSION, SEDIMENTATION, TURBIDITY, AND POLLUTION CONTROL MEASURES. REMEDIAL ACTION SHALL BE PERFORMED IMMEDIATELY.

IV. INSPECTION

ALL CONTROLS SHALL BE INSPECTED ONCE EVERY SEVEN (7) CALENDAR DAYS THROUGHOUT THE CONSTRUCTION PERIOD BY THE CONTRACTOR, AS WELL AS WITHIN 24 HOURS OF ONE HALF INCH (0.5 INCHES) OR MORE RAIN, UNTIL THE NOTICE OF TERMINATION IS FILED WITH THE FLORIDA DEPARTMENT OF ENVIRONMENTAL PROTECTION (FDEP). THE CONTRACTOR WILL USE FDOT FORM 650–040–03 TO REPORT ALL INSPECTION FINDINGS AND CORRECTIVE ACTIONS TAKEN AS A RESULT OF THE INSPECTION. THE CONTRACTOR WILL SIGN EACH INSPECTION REPORT AND SUBMIT IT WEEKLY TO THE CITY ENGINEER. THE CONTRACTOR WILL MAKE AN INSPECTION, MAINTENANCE, AND REPAIRS REPORT PER EACH INSPECTION. BASED ON INSPECTION RESULTS, THE CONTROLS SHALL BE REVISED PER THE INSPECTION REPORTS. THE CONTRACTOR SHALL PROVIDE AN FDEP QUALIFIED STORMWATER MANAGEMENT INSPECTOR TO INSPECT THE DISTURBED AREAS OF THE CONSTRUCTION SITE THAT HAVE NOT BEEN STABILIZED, THE AREAS USED FOR STORAGE OF MATERIALS THAT ARE EXPOSED TO PRECIPITATION, THE STRUCTURAL CONTROL MEASURES, AND THE LOCATIONS WHERE VEHICLES ENTER OR EXIT THE SITE. A REPORT SHALL BE ATTACHED TO THE DAILY QUALITY CONTROL REPORT. INCLUDED IN THE REPORT WILL BE A WRITTEN SUMMARY OF THE SCOPE OF THE INSPECTION, MAJOR OBSERVATIONS RELATING TO THE IMPLEMENTATION OF THE SWPPP, THE NAME OF THE INSPECTOR, THE DATE, AND THE ACTIONS AND MODIFICATIONS TAKEN TO CORRECT ANY INSUFFICIENCIES IDENTIFIED DURING THE INSPECTION. THE REPORT SHALL IDENTIFY ANY INCIDENT OF NON–COMPLIANCE. IF NO INCIDENTS OF NON–COMPLIANCE ARE OBSERVED DURING THE INSPECTION, THE REPORT SHALL CONTAIN A CERTIFICATION THAT THE FACILITY IS IN COMPLIANCE WITH THE SWPPP AND ALL ENVIRONMENTAL PERMITS.

CONTRACTOR CERTIFICATION:

" I CERTIFY UNDER PENALTY OF LAW THAT I UNDERSTAND AND SHALL COMPLY WITH THE TERMS AND CONDITIONS OF THE STATE OF FLORIDA GENERIC PERMIT FOR STORMWATER DISCHARGE FROM LARGE AND SMALL CONSTRUCTION ACTIVITIES AND THIS STORMWATER POLLUTION PREVENTION PLAN THEREUNDER."

NAME: _____ TITLE: _____

CONTRACTING FIRM: _____ ADDRESS: _____

TELEPHONE #: _____ DATE: _____

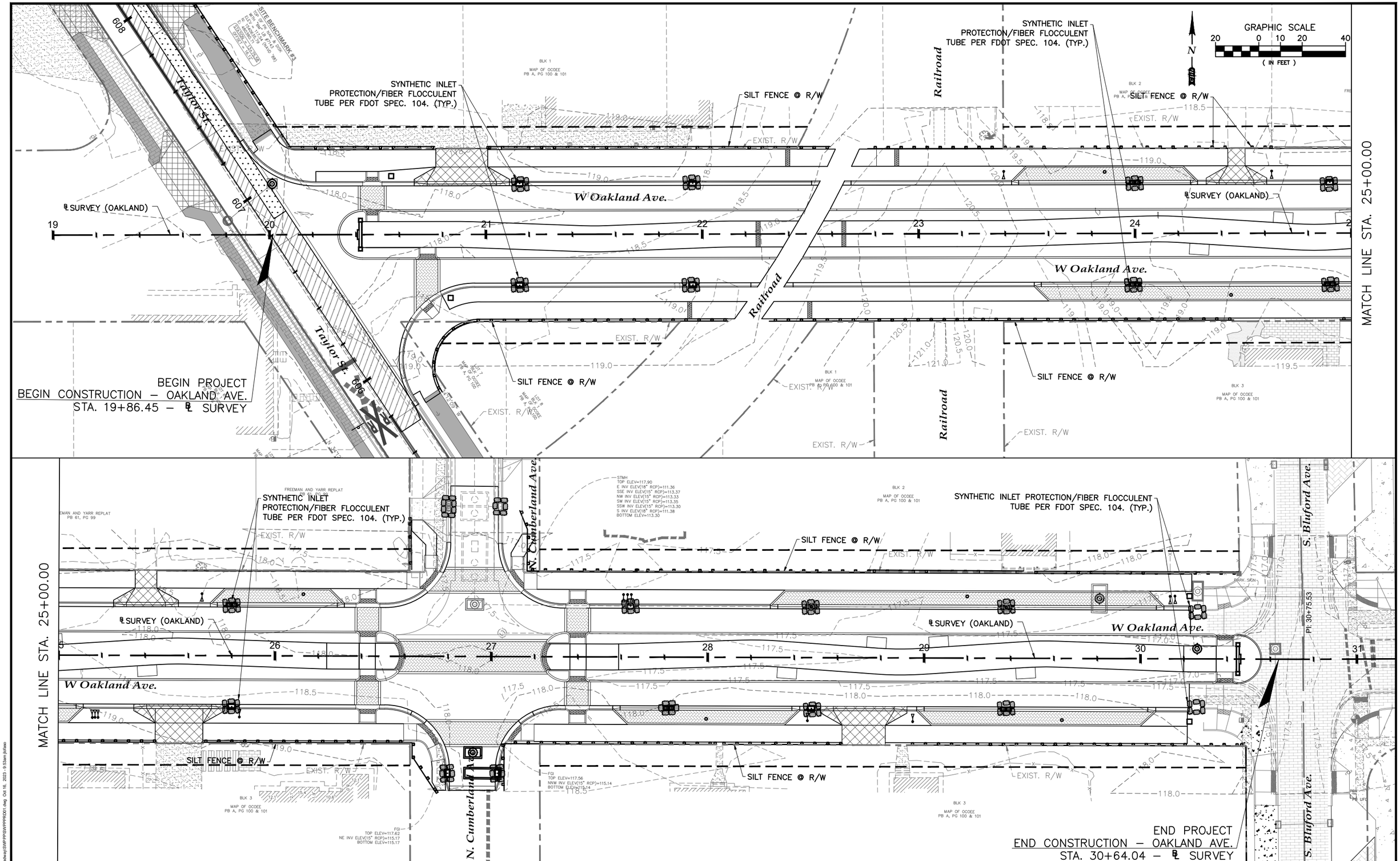

No.	Date	Revision	By	No.	Date	Revision	By
1				5			
2				6			
3				7			
4				8			

cph — www.cphcorp.com

A Full Service A & E Firm
Architects, Engineers, Environmental, Landscape Architects, M/E/P, Planners, Surveyors, Traffic/Transportation

Offices In: • Florida • Puerto Rico • Connecticut • Maryland • Texas

Designed by:	CJT	Date: 10/16/2023
Drawn by:	AM/CJT	Scale: AS NOTED
Checked by:	KRL	
Approved by:	JML	
Job No.	O6012	©2023

Oakland Ave.
City of Ocoee, Florida

Plans Prepared By:
CPH, Inc.
500 W. Fulton St. Sanford, FL 32771
Ph: 407.322.6841
Licenses:
Eng. C.O.A. No. 3215 *Arch. Lic. No. AA2600926*
Survey L.B. No. 7143 *Landscp. Lic. No. LC0000298*

JOSEPH M LOFASO, P.E.
FL P.E. No. 88718

Stormwater Pollution Prevention Plan

Sheet No.
30

Drawing name: J:\O6012\Roadway\SWPPP\SWPPPR001.dwg Oct 16, 2023 - 9:53am jlofaso

SIGNING AND PAVEMENT MARKING PLANS – GENERAL NOTES

1. ALL SIGNS AND PAVEMENT MARKINGS ARE TO BE PLACED IN ACCORDANCE WITH THE FHWA "MANUAL ON UNIFORM TRAFFIC CONTROL DEVICES", THE FHWA "MANUAL ON STANDARD HIGHWAY SIGNS", AND THE FDOT "STANDARD PLANS", LATEST PUBLISHED EDITION.

2. THE BACK OF ALL FINISHED SIGN PANELS SHALL BE STENCILED WITH THE DATE OF FABRICATION. THE FABRICATOR'S INITIALS, AND THE NAME OF THE SHEETING AT THE LOWER RIGHT– HAND CORNER OF THE SIGN IN THREE INCH LETTERS.

3. THE CONTRACTOR SHALL VERIFY THE LENGTH OF SIGN COLUMN SUPPORTS IN THE FIELD PRIOR TO FABRICATION.

4. ALL SIGNS TO BE REMOVED ARE THE PROPERTY OF THE CITY OF OCOEE. DISASSEMBLE SIGNS FROM THE POST AND DELIVER TO THE CITY.

5. ALL SIGNS SHALL BE NEW INSTALLATION.

6. ALL GROUND MOUNTED SIGNS SHALL BE FABRICATED USING HIGH INTENSITY GRADE SHEETINGS.

7. ALL SURFACES SHALL BE CLEANED PRIOR TO START OF INSTALLATION OF ALL PAVEMENT MARKINGS.

8. ALL SIGNS INCLUDING STOP SIGNS ON SIDE STREETS SHALL BE UNOBSTRUCTED.

9. FABRICATION OF ALL SIGNS SHALL BE INCORPORATED WITH TITLE 23, US CODE, SECTION 109B, 109D, AND 402A AND HIGHWAY SAFETY PROGRAM STANDARD 13, TRAFFIC ENGINEERING SERVICES.

10. ALL HARDWARE WILL BE STAINLESS STEEL, 5/16" THREAD.

11. ALL SIGNS TO BE MOUNTED ON BLACK GALVANIZED STEEL POSTS POURED INTO A SLEEVE.

12. ALL PAVEMENT MARKINGS ON ROADWAYS SHALL BE THERMOPLASTIC UNLESS OTHERWISE SPECIFIED.

13. THE PAVEMENT MARKINGS AT ALL EXISTING/PROPOSED INTERFACE LOCATIONS ARE TO MATCH IN TERMS OF ALIGNMENT.

14. DUE TO DESTRUCTION AND TRACKING BY CONSTRUCTION VEHICLES, ADDITIONAL PAVEMENT MARKINGS AT THE BEGINNING AND END OF PROJECT MAY BE REQUIRED AS DETERMINED BY THE INSPECTOR AND/OR CITY ENGINEER.

15. THE CONTRACTOR SHALL REMOVE ANY EXISTING OR TEMPORARY PAVEMENT MARKINGS THAT CONFLICT WITH THE SIGNING & PAVEMENT MARKING PLANS. THE CONTRACTOR SHALL UTILIZE A NON–DESTRUCTIVE FDOT APPROVED METHOD FOR STRIPING REMOVAL. EXCESSIVE DAMAGE TO EXISTING ASPHALT AS DETERMINED BY THE CITY ENGINEER SHALL BE REPAIRED AT THE CONTRACTORS EXPENSE.

16. SOME BROOMING MAY BE REQUIRED FOR INSTALLATION OF SIDE STREET STOPBARS.

17. REFLECTIVE PAVEMENT MARKERS ARE TO BE PLACED IN ACCORDANCE WITH THESE PLANS AND STANDARD PLANS INDEX NO. 706–001.

18. PRIOR TO THERMOPLASTIC PAVEMENT MARKINGS INSTALLATION, A 14–DAY "CURE TIME" ON ASPHALT IS REQUIRED.

19. PAVEMENT MESSAGES AND ARROWS SHALL BE PLACED IN ONE SEGMENT OR AS ONE LIFT.

20. IT IS THE CONTRACTOR'S RESPONSIBILITY TO REMOVE AND REPLACE ALL EXISTING SIGNS THAT CONFLICT WITH CONSTRUCTION OPERATIONS. IF SIGNS ARE DAMAGED BY THE CONTRACTOR, THE SIGNS SHALL BE REPLACED AT THE CONTRACTOR'S EXPENSE.

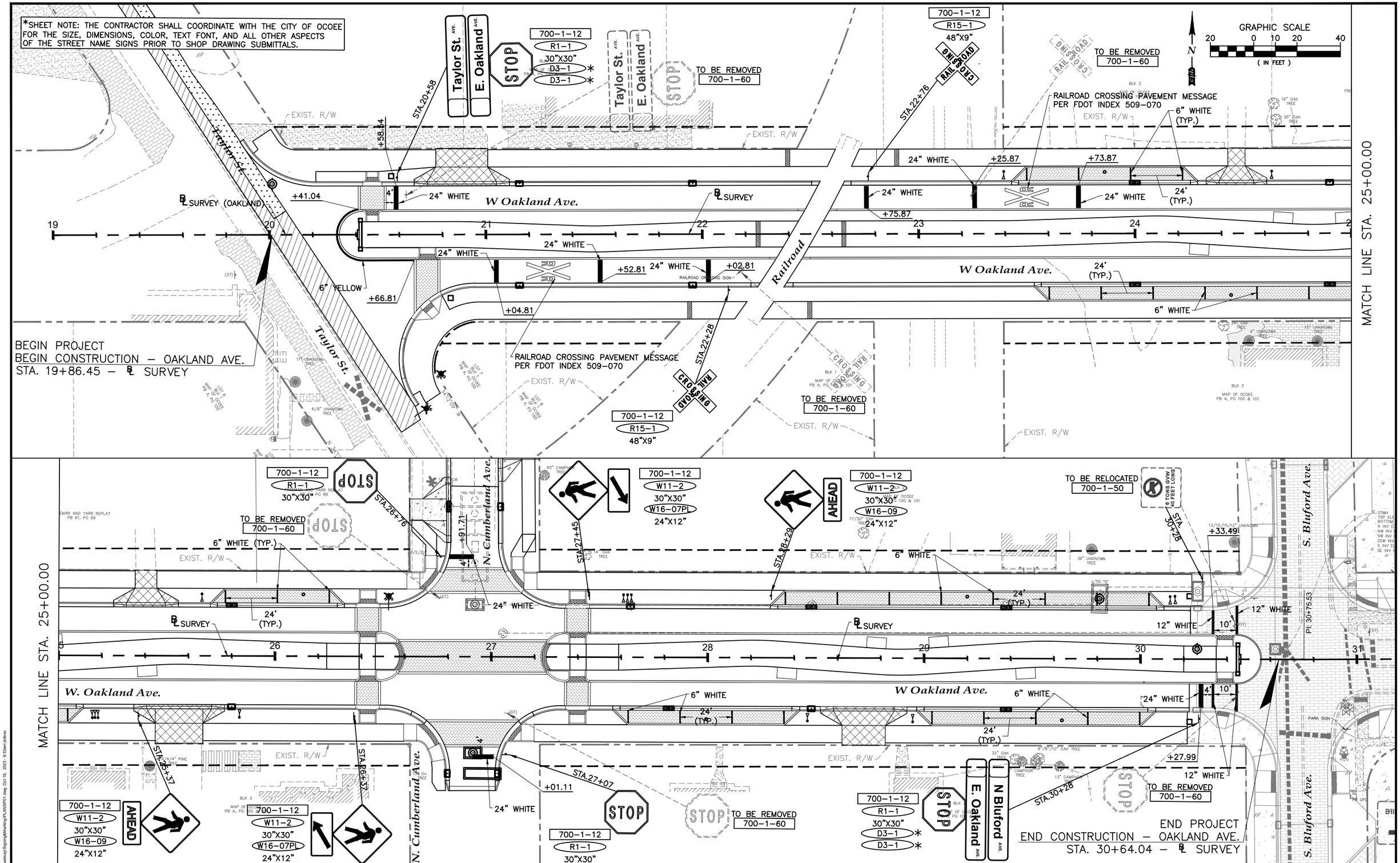

No.	Date	Revision	By	No.	Date	Revision	By
1				1			
2				2			
3				3			
4				4			

cph — www.cphcorp.com

A Full Service A & E Firm
Architects, Engineers, Environmental, Landscape Architects, M/E/P, Planners, Surveyors, Traffic/Transportation
Offices In: • Florida • Puerto Rico • Connecticut • Maryland • Texas

Designed by:	CJT	Date: 10/16/2023	
Drawn by:	AM/CJT	Scale: AS NOTED	
Checked by:	KRL		
Approved by:	JML		
Job No.	O6012	©2023	

Oakland Ave.
City of Ocoee, Florida

Plans Prepared By:
CPH, Inc.
500 W. Fulton St. Sanford, FL 32771
Ph: 407.322.6841
Licenses:
Eng. C.O.A. No. 3215 Arch. Lic. No. AA2600926
Survey L.B. No. 7143 Landscp. Lic. No. LC0000298

JOSEPH M LOFASO, P.E.
FL P.E. No. 88718

Signing and Pavement Marking Plan

Sheet No.
S-2

Drawing name: J:\O6012\Roadway\Signing&Marking\PLAN\SP01.dwg Oct 16, 2023 - 9:53am jlofaso

TRAFFIC CONTROL GENERAL NOTES:

1. IF THE TRAFFIC CONTROL PLAN USED IS DIFFERENT THAN THE TRAFFIC CONTROL PLAN AS SHOWN IN THESE PLANS, THE CONTRACTOR IS RESPONSIBLE FOR PREPARING A TRAFFIC CONTROL PLAN WHICH CONFORMS TO ALL THE REQUIREMENTS IDENTIFIED IN THE FDOT STANDARD PLANS, 102–600 SERIES (LATEST EDITION) AND THE FDOT STANDARD SPECIFICATIONS FOR ROAD AND BRIDGE CONSTRUCTION, SECTION 102, LATEST EDITION. THESE PLANS SHALL BE SUBMITTED TO THE CITY OF OCOEE FOR REVIEW AND APPROVAL PRIOR TO IMPLEMENTATION.

2. TRAFFIC SHALL BE MAINTAINED IN ACCORDANCE WITH F.D.O.T. STANDARD PLANS, INDEX 102–600 SERIES (LATEST EDITION) AND THE MANUAL ON UNIFORM TRAFFIC CONTROL DEVICES (MUTCD) (LATEST EDITION).

3. THE CONTRACTOR SHALL NOTIFY THE CITY OF VENICE A MINIMUM OF ONE (1) WEEK PRIOR TO COMMENCING ANY CONSTRUCTION RELATED ACTIVITY.

4. TRAFFIC SHALL BE MAINTAINED ON PAVED SURFACES AT ALL TIMES. IF UTILIZED, TEMPORARY THRU TRAVEL LANES SHALL BE A MINIMUM WIDTH OF 10 FT. AND TEMPORARY TURN LANES SHALL BE A MINIMUM WIDTH OF 10 FT.

5. TRAFFIC CONDITIONS (ACCIDENTS AND OTHER UNFORESEEN CONDITIONS) MAY REQUIRE THE CITY TO RESTRICT OR REMOVE LANE CLOSURES OR CHANNELIZATIONS OR REVISE THE IMPLEMENTED MAINTENANCE OF TRAFFIC PLAN. THE CONTRACTOR SHALL RESPOND AND PROVIDE ADJUSTMENTS AS DIRECTED BY THE CITY WITHOUT DELAY UNDER THESE CONDITIONS. THE CONTRACTOR SHALL ALSO RESPOND WITHIN 30 MINUTES UPON NOTIFICATION BY THE PROJECT ENGINEER TO ANY REQUESTS FOR CORRECTION, IMPROVEMENT OR MODIFICATION TO THE TRAFFIC CONTROL PLAN AND/OR DEVICES.

6. ACCESS TO ALL PROPERTIES SHALL BE MAINTAINED AT ALL TIMES.

6. EXISTING DRAINAGE SYSTEMS/CONVEYANCE SHALL BE MAINTAINED AT ALL TIMES. IF CONSTRUCTION ACTIVITIES WILL IMPACT THE DRAINAGE, THE CONTRACTOR SHALL BE RESPONSIBLE FOR THE IMMEDIATE REMOVAL OF STORM WATER FROM ROADWAYS UTILIZED FOR MAINTAINING OF TRAFFIC IN A MANNER APPROVED BY THE CITY.

7. UNLESS OTHERWISE SPECIFIED, THE CROSS SLOPE FOR ALL TEMPORARY PAVEMENT WHICH ABUTS EXISTING OR NEW PAVEMENT SHALL MATCH THE CROSS SLOPE OF THE ABUTTING PAVEMENT. CROSS SLOPE TRANSITIONS SHALL CONFORM TO STANDARD INDEX 511. THE CONTRACTOR SHALL INSURE ADEQUATE DRAINAGE OF ALL TEMPORARY PAVEMENT.

8. ALL EXISTING PAVEMENT MARKINGS OUTSIDE THE LIMITS OF CONSTRUCTION, THAT ARE ALTERED OR DAMAGED AS DETERMINED BY THE CITY, SHALL BE REPLACED UPON COMPLETION OF THE PROJECT AT THE CONTRACTOR'S EXPENSE.

9. THE TRAFFIC AND TRAVEL WAYS SHALL NOT BE ALTERED BY THE CONTRACTOR TO CREATE A WORK ZONE UNTIL ALL LABOR AND MATERIAL ARE AVAILABLE FOR THE CONSTRUCTION IN THAT AREA.

10. AS DETERMINED BY THE CONTRACTOR'S TRAFFIC CONTROL OFFICER, THE CONTRACTOR SHALL REMOVE WORK ZONE SIGNS WHEN CONDITIONS NO LONGER WARRANT THEIR USE.

11. CONTRACTOR SHALL REMOVE, RELOCATE OR COVER ANY EXISTING OR PROPOSED SIGNS THAT CONFLICT WITH THE TRAFFIC CONTROL PLANS. WHEN THE CONFLICT NO LONGER EXISTS, THE CONTRACTOR SHALL RESTORE THE SIGNS TO THEIR ORIGINAL POSITION. ANY SUCH SIGNS WHICH ARE DAMAGED DURING REMOVAL, RELOCATION, OR COVERING SHALL BE REPLACED AT THE CONTRACTOR'S EXPENSE.

12. COMPLETE PROPOSED WORK WITHIN DESIGNATED WORK ZONE. ENSURE THAT SIGHT DISTANCE REQUIREMENTS ARE MET AT ALL TIMES.

13. PEDESTRIAN TRAFFIC TO BE MAINTAINED ON EXISTING SIDEWALKS UNLESS OTHERWISE NOTED. CONTRACTOR TO REFER TO FDOT STANDARD PLANS NO. 102–660 FOR PEDESTRIAN CONTROL FOR CLOSURE OF SIDEWALKS.

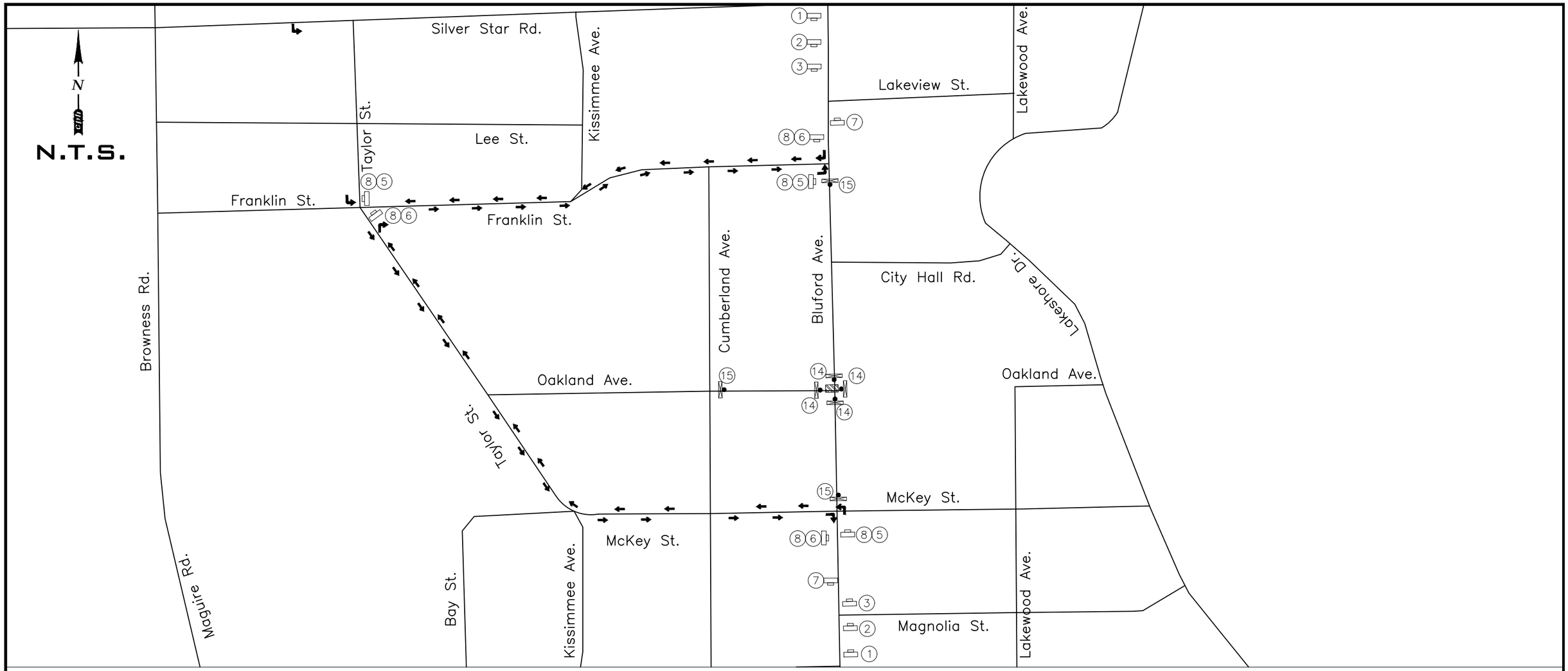

NOTES:

1. CONTRACTOR TO MAINTAIN ACCESS TO DRIVEWAYS ALONG BLUFORD AVE. AND OAKLAND AVE. AND SHALL COORDINATE DRIVEWAY CLOSURES WITH BUSINESS/PROPERTY OWNERS.
2. PEDESTRIAN TRAFFIC TO BE MAINTAINED ON EXISTING SIDEWALK UNLESS OTHERWISE NOTED.
3. PHASE 1 SHALL BE THE CLOSURE OF THE OAKLAND AVE. AND BLUFORD AVE. INTERSECTION. THE CLOSURE SHALL EXTEND EASTWARD UP OAKLAND AVE. TO STATION 30+00.00.
4. THE CLOSURE OF BLUFORD AVE. AND OAKLAND AVE. WILL BE FOR THE ENTIRE WIDTH OF THE ROADWAY.
5. ADVANCED WARNING SIGNS ON ROAD BEING CLOSED SHALL BE PER FDOT INDEX 102-600 SERIES AND THE MUTCD CHAPTER 6H.
6. PROVIDE ADVANCE WARNING SIGNS ON SIDE STREETS CONVERGING ON THE SEGMENT LIMITS PER FDOT INDEX 600 SERIES AND THE MUTCD CHAPTER 6H.
7. ADVANCED WARNING SIGNS ON ROAD BEING DETOURED SHALL BE IN ACCORDANCE WITH THE MUTCD CHAPTER 6H-20 (TYPICAL APPLICATION 20).
8. SIGN SPACING SHOWN IS FOR REFERENCE ONLY, PROPER SIGN SPACING SHALL BE PER FDOT INDEX 102-600 SERIES AND THE MUTCD CHAPTER 6H.

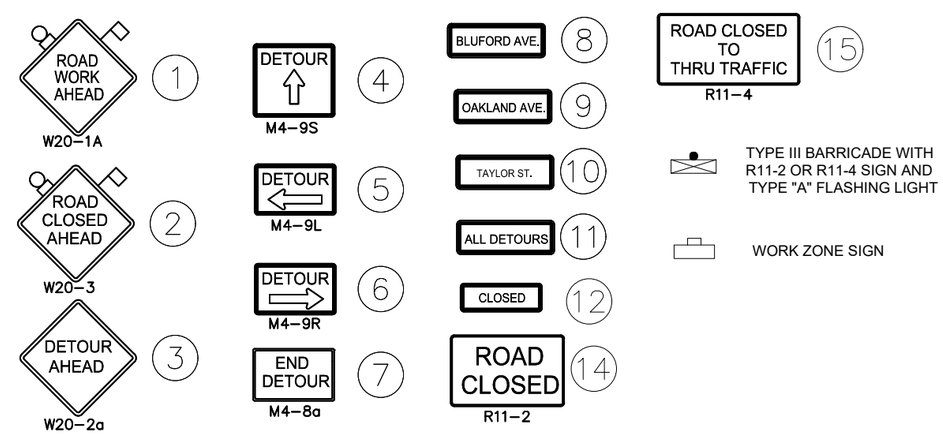

No.	Date	Revision	By	No.	Date	Revision	By
1				1			
2				2			
3				3			
4				4			

cph — www.cphcorp.com

A Full Service A & E Firm: Architects, Engineers, Environmental, Landscape Architects, M/E/P, Planners, Surveyors, Traffic/Transportation

Offices In: • Florida • Puerto Rico • Connecticut • Maryland • Texas

Designed by:	JML	Date:	10/16/2023
Drawn by:	PEA/CP	Scale:	AS NOTED
Checked by:	JML		
Approved by:	KRL		
Job No.	O6012		©2023

W. Oakland & N. Cumberland Reconstruction - Phase 1
City of Ocoee, Florida

Plans Prepared By: CPH, Inc.
500 W. Fulton St. Sanford, FL 32771
Ph: 407.322.6841
Licenses: Eng. C.O.A. No. 3215, Arch. Lic. No. AA26000926, Survey L.B. No. 7143, Landscp. Lic. No. LC0000298

JOSEPH MICHAEL LOFASO, P.E.
FL P.E. No. 88718

Traffic Control Plan Phase 1

Sheet No. **TCP-2**

Drawing name: J:\O6012\Roadway\TCP\TCPR001.dwg Oct 16, 2023 - 9:53am jlofaso

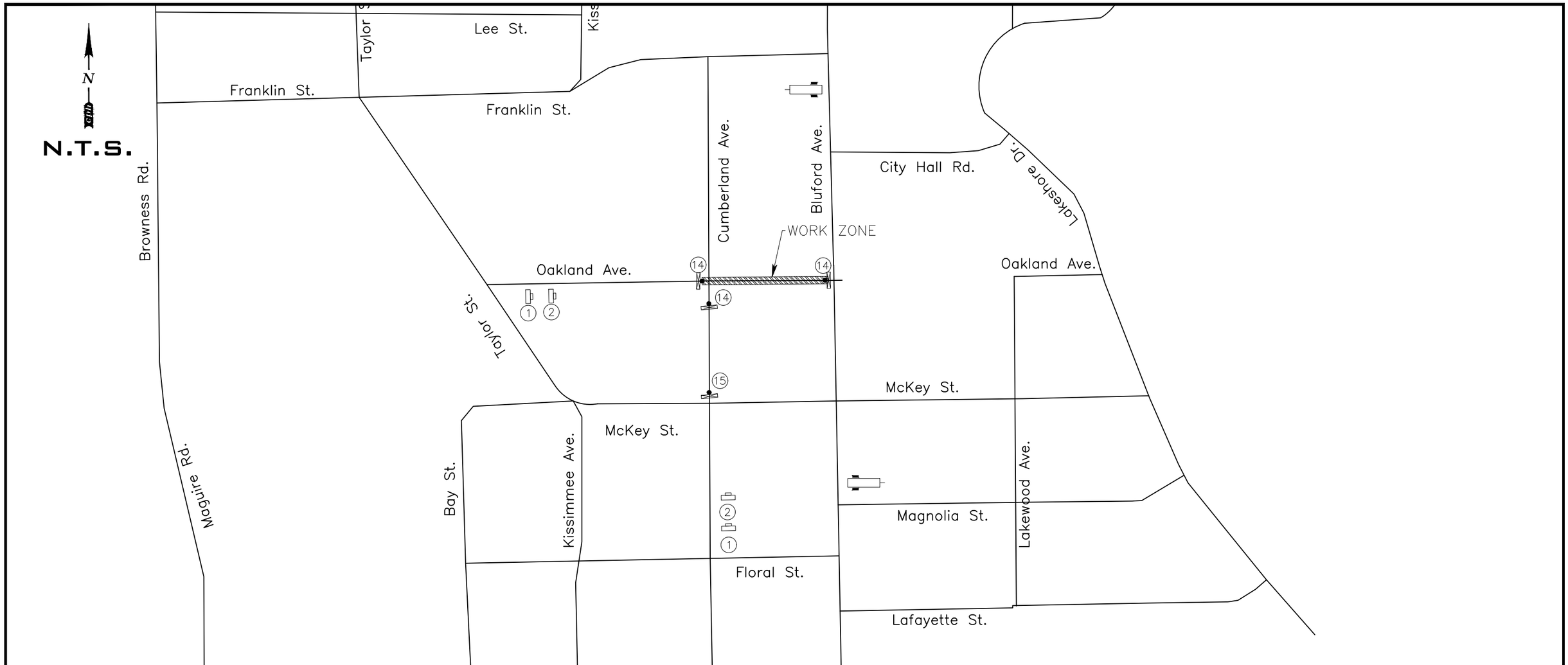

NOTES:

1. CONTRACTOR TO MAINTAIN ACCESS TO DRIVEWAYS ALONG OAKLAND AVE. BETWEEN BLUFORD AVE. AND CUMBERLAND AVE. AND SHALL COORDINATE DRIVEWAY CLOSURES WITH BUSINESS/PROPERTY OWNERS.
2. PEDESTRIAN TRAFFIC TO BE MAINTAINED ON EXISTING SIDEWALK UNLESS OTHERWISE NOTED.
3. PHASE 2 SHALL EXTEND FROM THE WESTERN SIDE OF THE BLUFORD AVE. INTERSECTION AT STA. 26+55.91 TO THE CUMBERLAND AVE. INTERSECTION AT STA. 26+00.00.
4. THE CLOSURE OF OAKLAND AVE. WILL BE FOR THE ENTIRE WIDTH OF THE ROADWAY..
5. ADVANCED WARNING SIGNS ON ROAD BEING CLOSED SHALL BE PER FDOT INDEX 102-600 SERIES AND THE MUTCD CHAPTER 6H.
6. PROVIDE ADVANCE WARNING SIGNS ON SIDE STREETS CONVERGING ON THE SEGMENT LIMITS PER FDOT INDEX 600 SERIES AND THE MUTCD CHAPTER 6H.
7. ADVANCED WARNING SIGNS ON ROAD BEING DETOURED SHALL BE IN ACCORDANCE WITH THE MUTCD CHAPTER 6H-20 (TYPICAL APPLICATION 20).
8. SIGN SPACING SHOWN IS FOR REFERENCE ONLY, PROPER SIGN SPACING SHALL BE PER FDOT INDEX 102-600 SERIES AND THE MUTCD CHAPTER 6H.

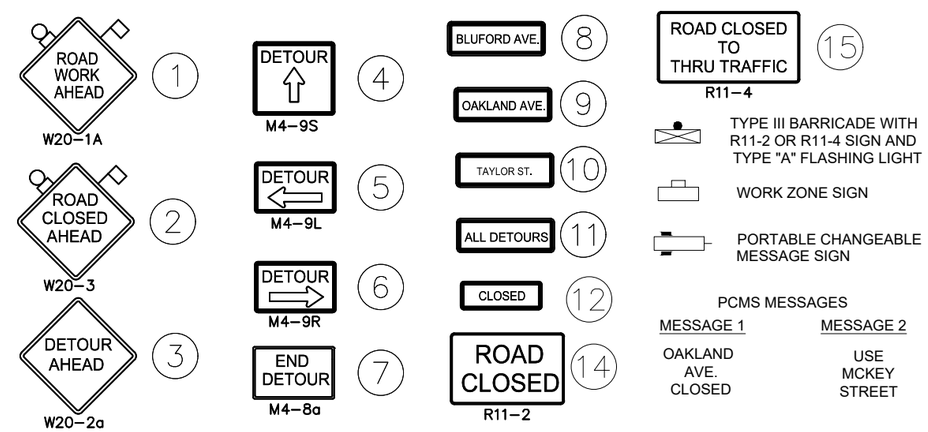

No.	Date	Revision	By	No.	Date	Revision	By
1				1			
2				2			
3				3			
4				4			

cph — www.cphcorp.com

A Full Service A & E Firm: Architects, Engineers, Environmental, Landscape Architects, M/E/P, Planners, Surveyors, Traffic/Transportation

Offices In: • Florida • Puerto Rico • Connecticut • Maryland • Texas

Designed by:	JML	Date: 10/16/2023
Drawn by:	PEA/CP	Scale: AS NOTED
Checked by:	JML	
Approved by:	KRL	
Job No.	O6012	©2023

W. Oakland & N. Cumberland Reconstruction - Phase 1
City of Ocoee, Florida

Plans Prepared By: CPH, Inc.
500 W. Fulton St. Sanford, FL 32771
Ph: 407.322.6841
Licenses:
Eng. C.O.A. No. 3215 Arch. Lic. No. AA26000926
Survey L.B. No. 7143 Landscp. Lic. No. LC0000298

JOSEPH MICHAEL LOFASO, P.E.
FL P.E. No. 88718

Traffic Control Plan Phase 2

Sheet No.
TCP-3

Drawing name: J:\O6012\Roadway\TCP\TCPRD01.dwg Oct 16, 2023 - 9:54am jlofaso

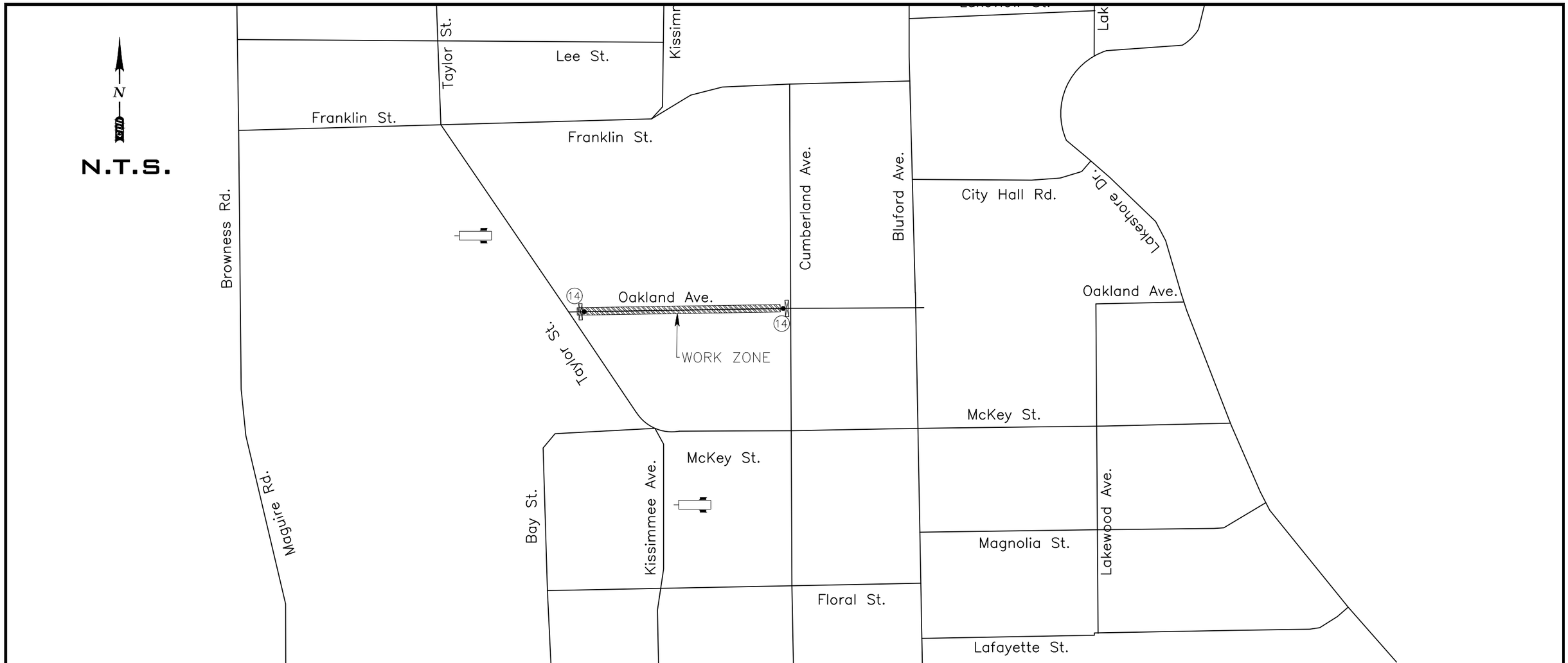

NOTES:

1. CONTRACTOR TO MAINTAIN ACCESS TO DRIVEWAYS ALONG OAKLAND AVE. AND CUMBERLAND AVE. AND SHALL COORDINATE DRIVEWAY CLOSURES WITH BUSINESS/PROPERTY OWNERS.
2. PEDESTRIAN TRAFFIC TO BE MAINTAINED ON EXISTING SIDEWALK UNLESS OTHERWISE NOTED.
3. PHASE 3 SHALL EXTEND FROM THE WESTERN SIDE OF THE CUMBERLAND AVE. INTERSECTION AT STA. 26+00.00 TO THE WESTERN SIDE OF THE EASTERN SIDE OF THE TAYLOR STREET INTERSECTION AT STA. 20+30.00.
4. THE CLOSURE OF OAKLAND AVE. AND CUMBERLAND AVE. WILL BE FOR THE ENTIRE WIDTH OF THE ROADWAY.
5. ADVANCED WARNING SIGNS ON ROAD BEING CLOSED SHALL BE PER FDOT INDEX 600 SERIES AND THE MUTCD CHAPTER 6H.
6. PROVIDE ADVANCE WARNING SIGNS ON SIDE STREETS CONVERGING ON THE SEGMENT LIMITS PER FDOT INDEX 102-600 SERIES AND THE MUTCD CHAPTER 6H.
7. ADVANCED WARNING SIGNS ON ROAD BEING DETOURED SHALL BE IN ACCORDANCE WITH THE MUTCD CHAPTER 6H-20 (TYPICAL APPLICATION 20).
8. SIGN SPACING SHOWN IS FOR REFERENCE ONLY, PROPER SIGN SPACING SHALL BE PER FDOT INDEX 102-600 SERIES AND THE MUTCD CHAPTER 6H.

ROAD WORK AHEAD — W20–1A (1)

ROAD CLOSED AHEAD — W20–3 (2)

DETOUR AHEAD — W20–2a (3)

DETOUR ⇧ — M4–9S (4)

DETOUR ⇦ — M4–9L (5)

DETOUR ⇨ — M4–9R (6)

END DETOUR — M4–8a (7)

BLUFORD AVE. (8)

OAKLAND AVE. (9)

TAYLOR ST. (10)

ALL DETOURS (11)

CLOSED (12)

ROAD CLOSED — R11–2 (14)

ROAD CLOSED TO THRU TRAFFIC — R11–4 (15)

PORTABLE CHANGEABLE MESSAGE SIGN

TYPE III BARRICADE WITH R11-2 OR R11-4 SIGN AND TYPE "A" FLASHING LIGHT

WORK ZONE SIGN

PCMS MESSAGES

MESSAGE 1	MESSAGE 2
OAKLAND AVE. CLOSED	USE MCKEY STREET

No.	Date	Revision	By	No.	Date	Revision	By
1				1			
2				2			
3				3			
4				4			

cph — www.cphcorp.com

A Full Service A & E Firm
Architects, Engineers, Environmental, Landscape Architects, M/E/P, Planners, Surveyors, Traffic/Transportation

Offices In: • Florida • Puerto Rico • Connecticut • Maryland • Texas

Designed by:	JML	Date: 10/16/2023	
Drawn by:	PEA/CP	Scale: AS NOTED	
Checked by:	JML		
Approved by:	KRL		
Job No.	O6012	©2023	

W. Oakland & N. Cumberland Reconstruction - Phase 1
City of Ocoee, Florida

Plans Prepared By:
CPH, Inc.
500 W. Fulton St. Sanford, FL 32771
Ph: 407.322.6841
Licenses:
Eng. C.O.A. No. 3215 Arch. Lic. No. AA26000926
Survey L.B. No. 7143 Landscp. Lic. No. LC0000298

JOSEPH MICHAEL LOFASO, P.E.
FL P.E. No. 88718

Traffic Control Plan
Phase 3

Sheet No.
TCP-4

Drawing name: J:\O6012\Roadway\TCP\TCPR001.dwg Oct 16, 2023 - 9:54am jlofaso

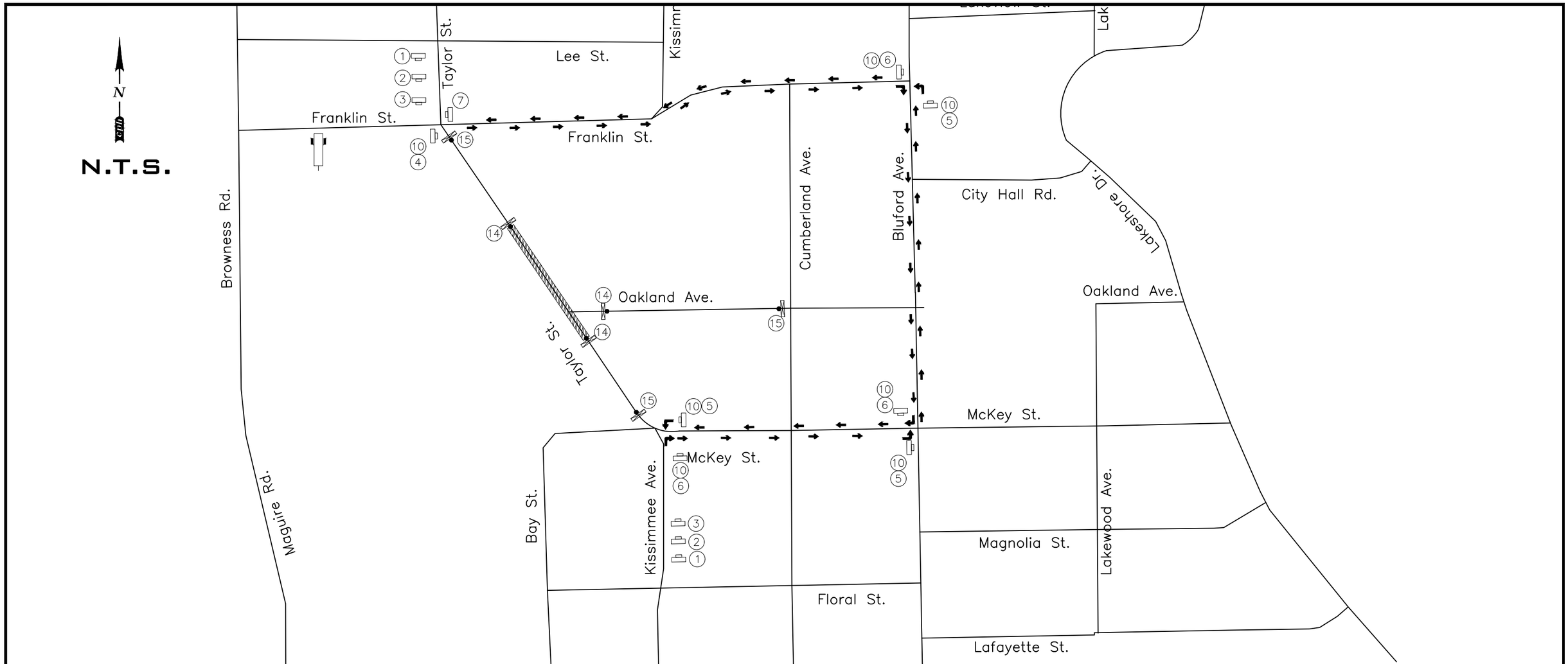

NOTES:

1. CONTRACTOR TO MAINTAIN ACCESS TO DRIVEWAYS ALONG OAKLAND AVE. AND CUMBERLAND AVE. AND SHALL COORDINATE DRIVEWAY CLOSURES WITH BUSINESS/PROPERTY OWNERS.
2. PEDESTRIAN TRAFFIC TO BE MAINTAINED ON EXISTING SIDEWALK UNLESS OTHERWISE NOTED.
3. PHASE 3 SHALL INVOLVE CLOSURE OF TAYLOR ST. FROM STA. 606+00.00 TO STA. 609+00.00 AND INCLUDE THE INTERSECTION OF TAYLOR ST. AND OAKLAND AVE.
4. THE CLOSURE OF OAKLAND AVE. AND CUMBERLAND AVE. WILL BE FOR THE ENTIRE WIDTH OF THE ROADWAY.
5. ADVANCED WARNING SIGNS ON ROAD BEING CLOSED SHALL BE PER FDOT INDEX 600 SERIES AND THE MUTCD CHAPTER 6H.
6. PROVIDE ADVANCE WARNING SIGNS ON SIDE STREETS CONVERGING ON THE SEGMENT LIMITS PER FDOT INDEX 102-600 SERIES AND THE MUTCD CHAPTER 6H.
7. ADVANCED WARNING SIGNS ON ROAD BEING DETOURED SHALL BE IN ACCORDANCE WITH THE MUTCD CHAPTER 6H-20 (TYPICAL APPLICATION 20).
8. SIGN SPACING SHOWN IS FOR REFERENCE ONLY, PROPER SIGN SPACING SHALL BE PER FDOT INDEX 102-600 SERIES AND THE MUTCD CHAPTER 6H.

ROAD WORK AHEAD — W20–1A — 1
ROAD CLOSED AHEAD — W20–3 — 2
DETOUR AHEAD — W20–2a — 3
DETOUR ⇧ — M4–9S — 4
DETOUR ⇦ — M4–9L — 5
DETOUR ⇨ — M4–9R — 6
END DETOUR — M4–8a — 7
BLUFORD AVE. — 8
OAKLAND AVE. — 9
TAYLOR ST. — 10
ALL DETOURS — 11
CLOSED — 12
ROAD CLOSED — R11–2 — 14
ROAD CLOSED TO THRU TRAFFIC — R11–4 — 15

PORTABLE CHANGEABLE MESSAGE SIGN

TYPE III BARRICADE WITH R11-2 OR R11-4 SIGN AND TYPE "A" FLASHING LIGHT

WORK ZONE SIGN

PCMS MESSAGES

MESSAGE 1	MESSAGE 2
TAYLOR STREET CLOSED	FOLLOW DETOUR

No.	Date	Revision	By	No.	Date	Revision	By
1				1			
2				2			
3				3			
4				4			

cph — www.cphcorp.com
A Full Service A & E Firm — Architects, Engineers, Environmental, Landscape Architects, M/E/P, Planners, Surveyors, Traffic/Transportation
Offices In: • Florida • Puerto Rico • Connecticut • Maryland • Texas

Designed by:	JML	Date:	10/16/2023
Drawn by:	PEA/CP	Scale:	AS NOTED
Checked by:	JML		
Approved by:	KRL		
Job No.	O6012	©2023	

W. Oakland & N. Cumberland Reconstruction - Phase 1
City of Ocoee, Florida

Plans Prepared By: CPH, Inc. 500 W. Fulton St. Sanford, FL 32771 Ph: 407.322.6841
Licenses: Eng. C.O.A. No. 3215, Arch. Lic. No. AA26000926, Survey L.B. No. 7143, Landscp. Lic. No. LC0000298

JOSEPH MICHAEL LOFASO, P.E.
FL P.E. No. 88718

Traffic Control Plan Phase 4

Sheet No. TCP-5

Drawing name: J:\O6012\Roadway\TCP\TCPR001.dwg Oct 16, 2023 - 9:04am jlofaso

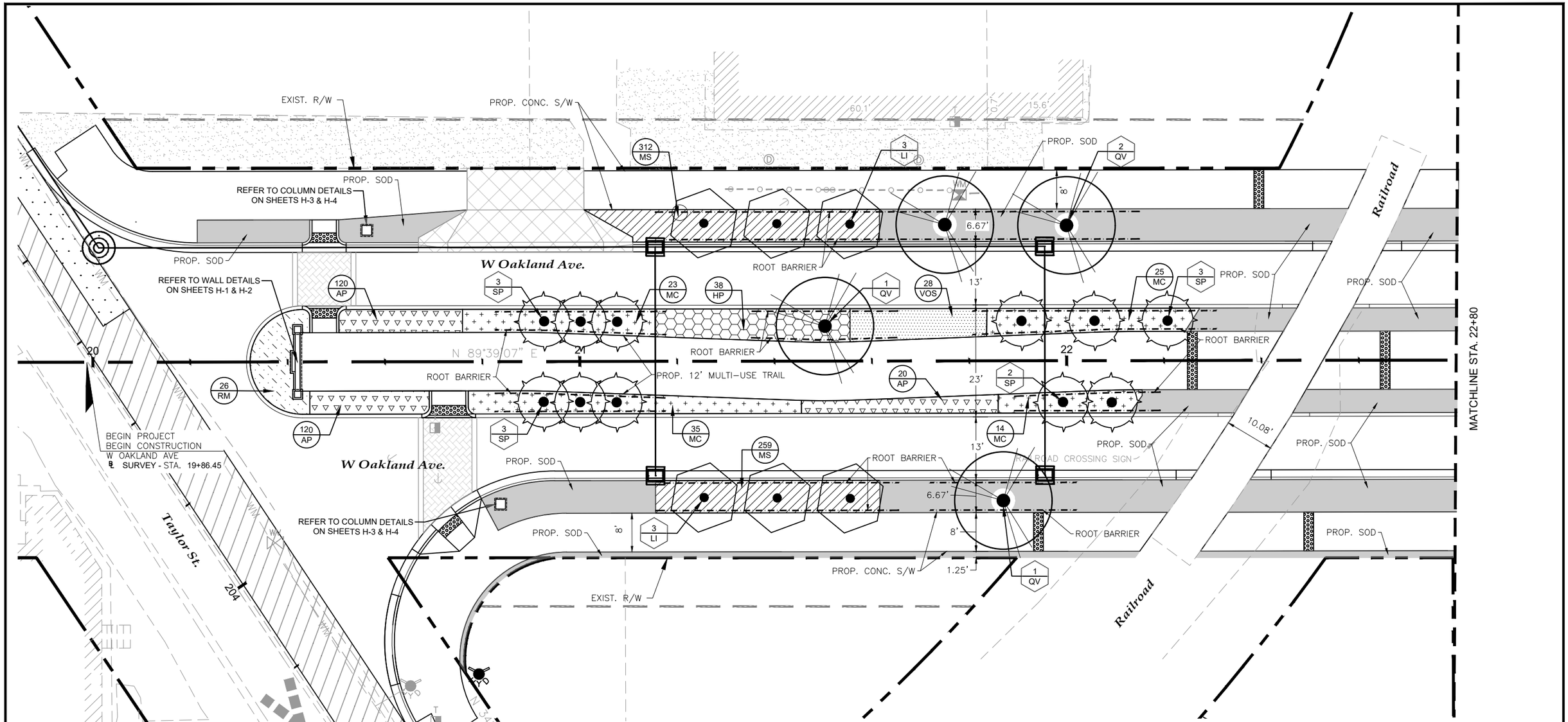

PLANT LIST

SYM	COMMON NAME
TREES	
LI	NATCHEZ CRAPE MYRTLE
QV	HIGHRISE LIVE OAK
SP	CABBAGE PALM
EX	EXISTING TREES
SHRUBS AND GROUNDCOVER	
AP	BABY PETE AGAPANTHUS
HP	FIREFLY FIREBUSH
MC	MUHLY GRASS
MS	POWDERPUFF MIMOSA
RM	PEACH DRIFT ROSE
VOS	MRS SCHILLERS VIBURNUM
BAHIA	ARGENTINE BAHIA SOD
	ROOT BARRIER

N

Graphic Scale in Feet (10 0 10 20)

THIS SHEET NOT VALID FOR CONSTRUCTION UNLESS STAMPED APPROVED

Always call 811 two full business days before you dig
Sunshine811.com
www.sunshine811.com

No.	Date	Revision	By	No.	Date	Revision	By
1				5			
2				6			
3				7			
4				8			

cph
www.cphcorp.com
A Full Service A & E Firm
Architects, Engineers, Environmental, Landscape Architects, M/E/P, Planners, Surveyors, Traffic/Transportation
Offices In: • Florida • Puerto Rico • Connecticut • Maryland • Texas

Designed by:	JKW	Date: 9/11/2023	
Drawn by:	RES	Scale: AS NOTED	
Checked by:	JKW		
Approved by:	JKW		
Job No.	O6012	©2023	

Oakland Ave.
City of Ocoee, Florida

Plans Prepared By:
CPH, Inc.
500 W. Fulton St. Sanford, FL 32771
Ph: 407.322.6841
Licenses:
Eng. C.O.A. No. 3215 Arch. Lic. No. AA2600926
Survey L.B. No. 7143 Landscp. Lic. No. LC0000298

Landscape Plan
Sta. 20+00 to Sta. 22+80

Sheet No.
L-1

Drawing name: J:\O6012\Landscape\DWG\Preliminary Design\Plans\O6012-LSP.dwg Sep 11, 2023 - 9:13am rccouch

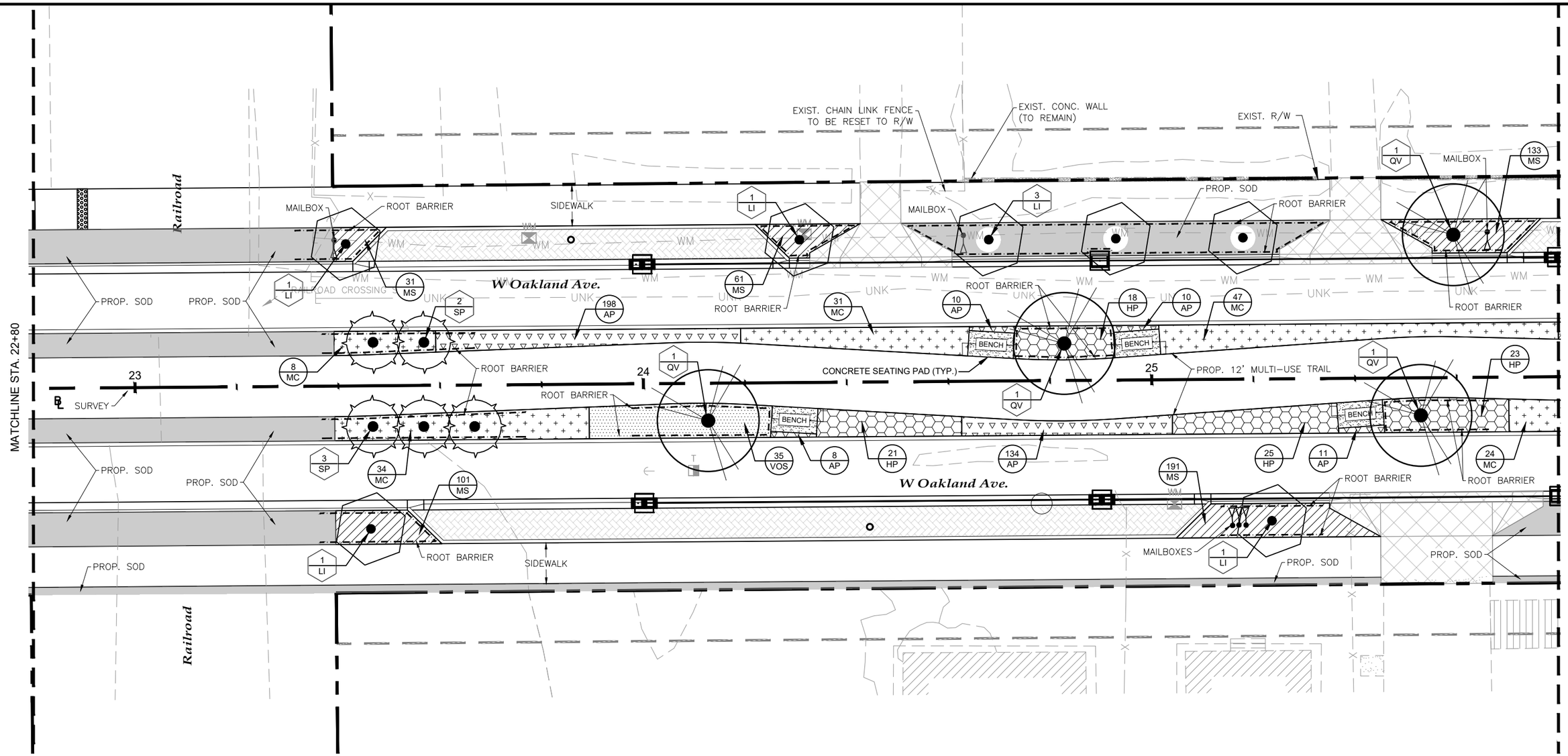

PLANT LIST

SYM	COMMON NAME
TREES	
LI	NATCHEZ CRAPE MYRTLE
QV	HIGHRISE LIVE OAK
SP	CABBAGE PALM
EX	EXISTING TREES
SHRUBS AND GROUNDCOVER	
AP	BABY PETE AGAPANTHUS
HP	FIREFLY FIREBUSH
MC	MUHLY GRASS
MS	POWDERPUFF MIMOSA
RM	PEACH DRIFT ROSE
VOS	MRS SCHILLERS VIBURNUM
BAHIA	ARGENTINE BAHIA SOD
ROOT BARRIER	

N

Graphic Scale in Feet (10 0 10 20)

THIS SHEET NOT VALID FOR CONSTRUCTION UNLESS STAMPED APPROVED

Always call 811 two full business days before you dig
Sunshine811.com
www.sunshine811.com

No.	Date	Revision	By	No.	Date	Revision	By
1				1			
2				2			
3				3			
4				4			

cph — www.cphcorp.com
A Full Service A & E Firm: Architects, Engineers, Environmental, Landscape Architects, M/E/P, Planners, Surveyors, Traffic/Transportation
Offices In: • Florida • Puerto Rico • Connecticut • Maryland • Texas

Designed by:	JKW	Date: 9/11/2023
Drawn by:	RES	Scale: AS NOTED
Checked by:	JKW	
Approved by:	JKW	
Job No.	O6012	©2023

Oakland Ave.
City of Ocoee, Florida

Plans Prepared By: CPH, Inc.
500 W. Fulton St. Sanford, FL 32771
Ph: 407.322.6841
Licenses: Eng. C.O.A. No. 3215, Arch. Lic. No. AA2600926, Survey L.B. No. 7143, Landscp. Lic. No. LC0000298

Landscape Plan
Sta. 22+80 to Sta. 25+80

Sheet No. *L-2*

Drawing name: J:\O6012\Landscape\DWG\Preliminary\Design\Plans\O6012-LSP.dwg Sep 11, 2023 - 9:13am rcouch

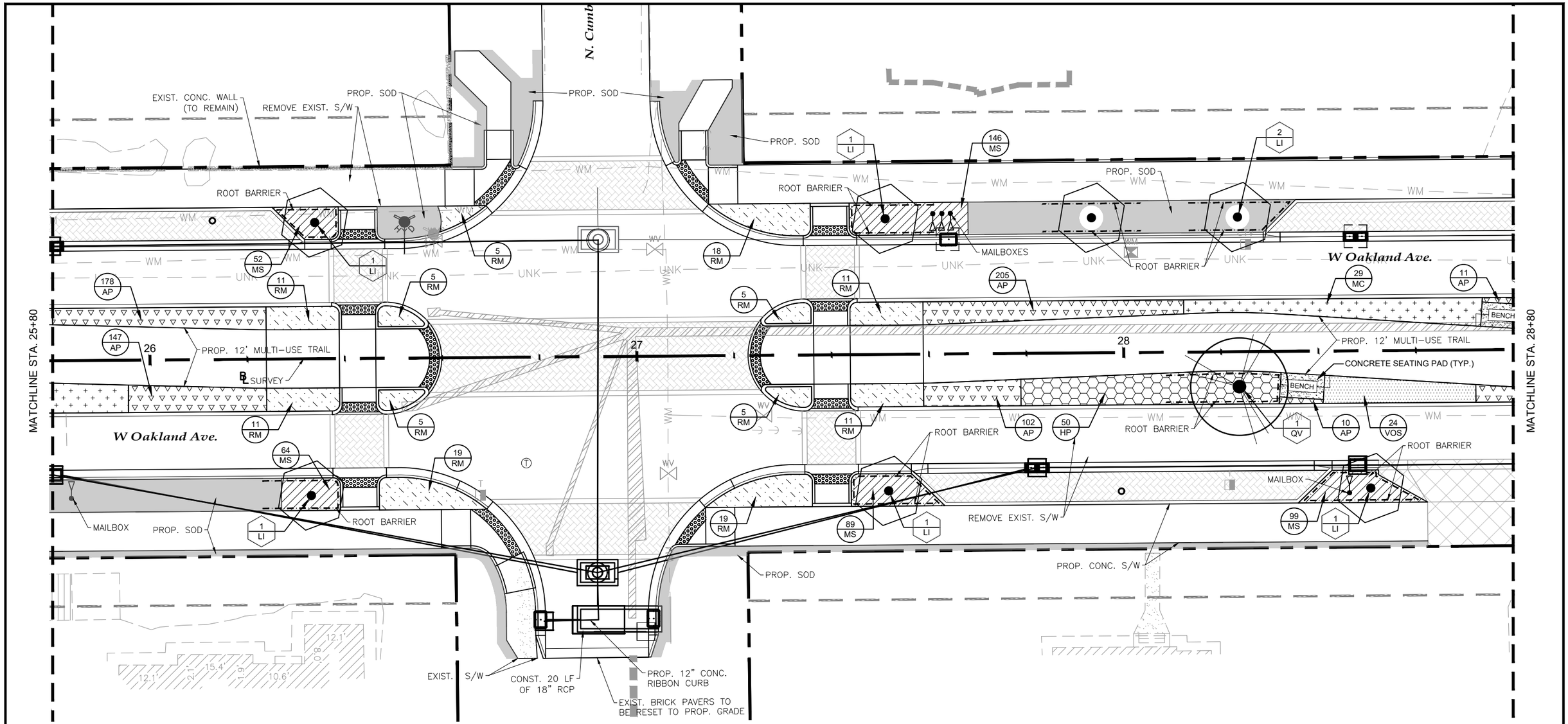

PLANT LIST

SYM	COMMON NAME
TREES	
LI	NATCHEZ CRAPE MYRTLE
QV	HIGHRISE LIVE OAK
SP	CABBAGE PALM
EX	EXISTING TREES
SHRUBS AND GROUNDCOVER	
AP	BABY PETE AGAPANTHUS
HP	FIREFLY FIREBUSH
MC	MUHLY GRASS
MS	POWDERPUFF MIMOSA
RM	PEACH DRIFT ROSE
VOS	MRS SCHILLERS VIBURNUM
BAHIA	ARGENTINE BAHIA SOD
ROOT BARRIER	

N

Graphic Scale in Feet (10 0 10 20)

THIS SHEET NOT VALID FOR CONSTRUCTION UNLESS STAMPED APPROVED

Always call 811 two full business days before you dig
Sunshine811.com
www.sunshine811.com

No.	Date	Revision	By	No.	Date	Revision	By
1				1			
2				2			
3				3			
4				4			

cph
www.cphcorp.com
A Full Service A & E Firm
Architects, Engineers, Environmental, Landscape Architects, M/E/P, Planners, Surveyors, Traffic/Transportation
Offices In: • Florida • Puerto Rico • Connecticut • Maryland • Texas

Designed by:	JKW	Date: 9/11/2023
Drawn by:	RES	Scale: AS NOTED
Checked by:	JKW	
Approved by:	JKW	
Job No.	O6012	©2023

Oakland Ave.
City of Ocoee, Florida

Plans Prepared By:
CPH, Inc.
500 W. Fulton St. Sanford, FL 32771
Ph: 407.322.6841
Licenses:
Eng. C.O.A. No. 3215 Arch. Lic. No. AA26000926
Survey L.B. No. 7143 Landscp. Lic. No. LC0000298

Landscape Plan
Sta. 25+80 to Sta. 28+80

Sheet No.
L-3

Drawing name: J:\O6012\Landscape\DWG\Preliminary\Design\Plans\O6012-LSP.dwg Sep 11, 2023 - 9:13am rcrouch

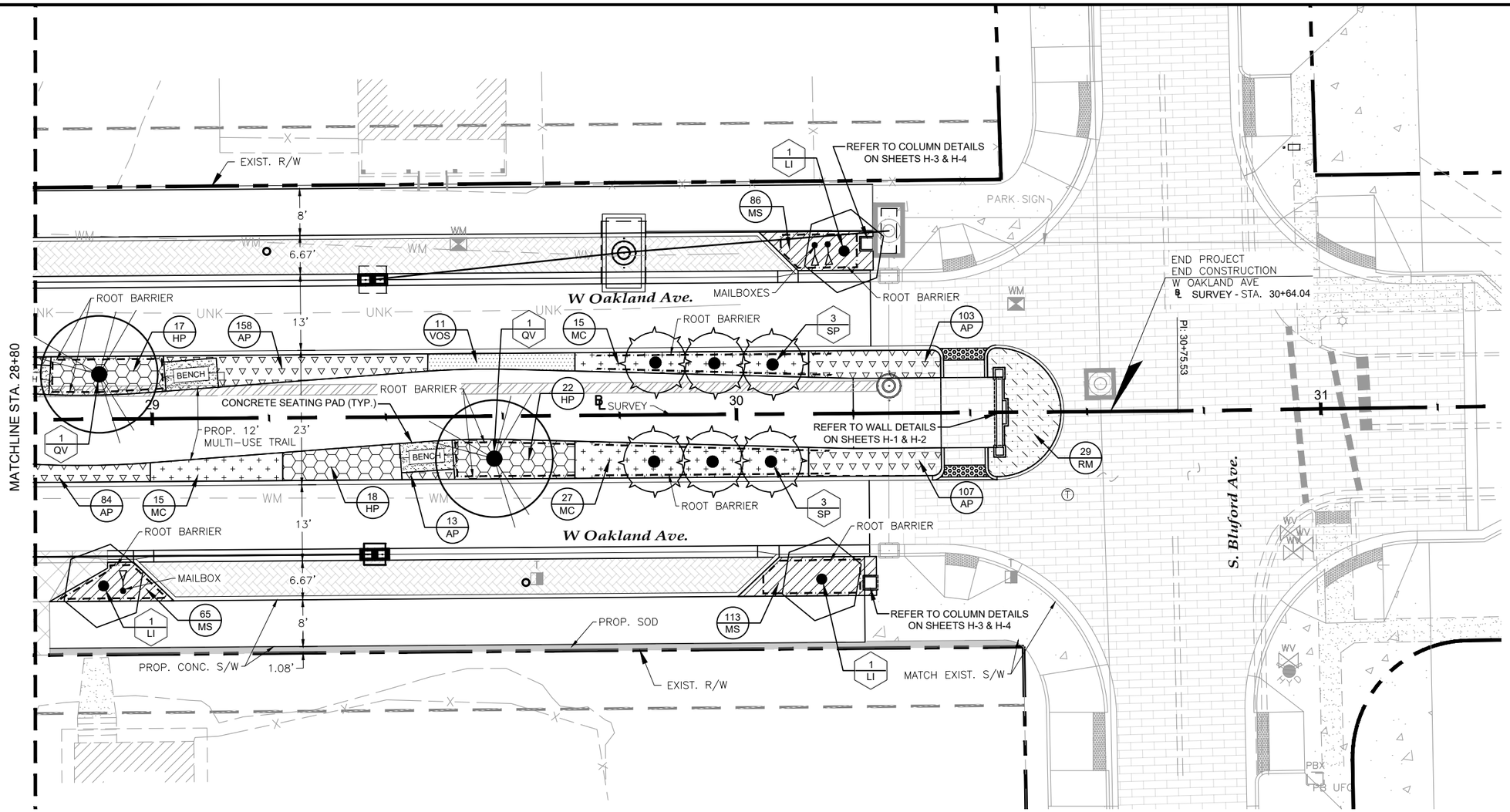

PLANT LIST

SYM	COMMON NAME
TREES	
LI	NATCHEZ CRAPE MYRTLE
QV	HIGHRISE LIVE OAK
SP	CABBAGE PALM
EX	EXISTING TREES
SHRUBS AND GROUNDCOVER	
AP	BABY PETE AGAPANTHUS
HP	FIREFLY FIREBUSH
MC	MUHLY GRASS
MS	POWDERPUFF MIMOSA
RM	PEACH DRIFT ROSE
VOS	MRS SCHILLERS VIBURNUM
BAHIA	ARGENTINE BAHIA SOD
	ROOT BARRIER

N

10 0 10 20
Graphic Scale in Feet

THIS SHEET NOT VALID FOR CONSTRUCTION UNLESS STAMPED APPROVED

Always call 811 two full business days before you dig
Sunshine811.com
www.sunshine811.com

No.	Date	Revision	By	No.	Date	Revision	By
1				4			
2				5			
3				6			

cph
www.cphcorp.com
A Full Service A & E Firm
Architects, Engineers, Environmental, Landscape Architects, M/E/P, Planners, Surveyors, Traffic/Transportation
Offices In: • Florida • Puerto Rico • Connecticut • Maryland • Texas

Designed by:	JKW	Date: 9/11/2023
Drawn by:	RES	Scale: AS NOTED
Checked by:	JKW	
Approved by:	JKW	
Job No.	O6012	©2023

Oakland Ave.
City of Ocoee, Florida

Plans Prepared By:
CPH, Inc.
500 W. Fulton St. Sanford, FL 32771
Ph: 407.322.6841
Licenses:
Eng. C.O.A. No. 3215 Arch. Lic. No. AA2600926
Survey L.B. No. 7143 Landscp. Lic. No. LC0000298

Landscape Plan
Sta. 28+80 to Sta. 31+00

Sheet No.
L-4

Drawing name: J:\O6012\Landscape\DWG\PreliminaryDesign\Plans\O6012-LSP.dwg Sep 11, 2023 - 9:13am nicrouch

LANDSCAPE NOTES:

1. The landscape Contractor shall be responsible for all materials and all work as called for on the Landscape Plans and in the Landscape Specifications. In the event of variation between quantities shown on plant list and the plans, the plans shall control. The Landscape Contractor shall verify all quantities and report any discrepancies at the time of bidding.

2. The Landscape Contractor shall review architectural/engineering plans and become thoroughly familiar with surface and subsurface utilities.

3. Prior to construction, the contractor shall be responsible for locating all underground utilities and shall avoid damage to all utilities during the course of the work. Locations of existing buried utility lines shown on the plans are based upon best available information and are considered to be approximate. It shall be the responsibility of the contractor 1) to verify the locations of utility lines within and adjacent to the work area 2) to protect all utility lines during the construction period 3) to repair any and all damage to utilities, structures, site appurtenances, etc. which occurs as a result of the construction 4) To field adjust the location of proposed trees and palms 10' off the center of the utility lines. Notify the Landscape Architect if a 10' offset does not function.

4. The work shall be coordinated with other trades to prevent conflicts. Coordinate the planting with the irrigation work to assure availability and proper location of irrigation items and plants.

5. Contractor shall ensure that there are no visual obstructions to vehicle lines of sight and traffic controls. Contractor shall field adjust tree and/or large shrub locations to avoid any such obstructions.

6. Trees shall be maintained by the owner to avoid future such obstructions by pruning trees and/or shrubs as necessary utilizing horticulturally sound techniques.

7. All planting shall be performed by personnel familiar with planting procedure and under the supervision of a qualified planting foreman.

8. All plant material shall be graded Florida No. 1 or better as outlined under Grades and Standards for Nursery Stock, Part I and II, published by the Florida Department of Agriculture and Consumer Services.

9. The minimum acceptable size of all plants, measured after pruning, with branches in normal positions, shall conform to the measurements specified on the plant list or as indicated on the landscape drawing. Height and spread dimensions refer to main body of the plant and not extreme branch tip to tip. Trunk caliper (trunk diameter) is measured 6 inches from the ground on trees up to and including 4 inches in caliper, and 12 inches from the ground for larger trees. Since trunks are seldom round, the average of the largest diameter and that perpendicular to it is referred to as caliper.

10. The Landscape Architect or Owner shall have the right, at any stage of the operations, to reject any and all work and materials which, in his opinion, do not meet with the requirements of these specifications.

11. Except as otherwise specified, the Landscape Contractor's work shall conform to accepted horticultural practices as used in the trade.

12. Plants shall be protected upon arrival at the site, by being thoroughly watered and properly maintained until planted.

13. TOPSOIL

    Topsoil shall be natural, friable, fertile, fine loamy soil possessing characteristics of representative topsoil in the vicinity that produces heavy growth. Topsoil shall have a pH range of 5.5 to 7.4, free from subsoil, objectionable weeds, litter, sods, stiff clay, stones larger than 1-inch in diameter, stumps, roots, trash, toxic substances, or any other material which may be harmful to plant growth or hinder planting operations. Top soil shall contain a minimum of three percent organic material. 6" Top Soil shall be placed in all turf & landscape areas.

14. All tree pits shall be excavated to size and depth in accordance with the Florida Grades & Standards for Nursery Stock, unless shown otherwise on the drawings, and backfilled with the specified planting soil. The Landscape Contractor shall test fill all tree pits with water before planting to assure proper drainage percolation is available.

15. The Landscape Contractor shall be responsible for proper watering of all plants. All plants shall be thoroughly watered at time of planting and kept adequately watered for plants to thrive as defined by Florida Grades and Standards for Nursery stock until time of acceptance. It shall be the Landscape Contractor's responsibility to assure that plants are not over watered.

16. It shall be the Landscape Contractor's responsibility to prevent plants from falling or being blown over, to re-straighten and replant all plants which lean or fall and to replace all plants which are damaged due to lack of proper guying or staking. The Landscape Contractor shall be legally liable for any damage caused by instability of any plant material.

17. All Palms to be staked as indicated per Palm staking details. All other trees to be stabilized utilizing 8' lodge poles per tree planting details.

18. Plants blown over by high winds, within the guaranteed period, shall not be cause for additional expense to the Owner, but shall be the responsibility of the Landscape Contractor. Damaged plants shall be replaced by the Landscape Contractor at no additional cost to the Owner.

19. Sod shall be of a species specified on the drawings and originate from a commercial turf grower. It shall be a dense stand of live turf, reasonably free of weeds, well matted with grass roots in rectangles 12 inch by 24 inch or in 12 inch wide rolls in a length consistent with the equipment and methods used to handle the rolls and place the sod. Any netting contained within the sod shall be certified by the manufacturer to be bio-degradable. The soil and root mat shall be a minimum of 1-1/2 inch thick and must hold together during placement. Sod shall be place adjacent to one another to avoid gaps and overlaps. Joints shall be staggered between the rows. Sod placed on slopes exceeding 3:1 shall be pinned with turf staples. Sod turf, shall have been mowed a minimum of one week prior to cutting and delivery, so that the length of the turf is no longer than 4 inches at time of delivery. Place sod within 48 hours of cutting the sod. The sod shall be kept moist throughout the 48 hour period to maintain the health and viability of the sod. Submit a letter of certification to the Owner's CEI Representative, at time of delivery, as to the source of the sod, the time it was cut, the species and cultivars provided, last mowing date, and that the sod is free of fire ants. Sod which has been cut for longer than 48 hours after being cut shall not be used unless specifically authorized by Owner's CEI Representative.

20. It shall be the Contractor's responsibility to measure and determine the exact quantity of sod required for a complete job at the time of bidding or providing a price quote. The Owner shall not be responsible for additional cost due to the Contractor's under estimating of the quantity of sod for the original bid area.

21. The Landscape Contractor shall insure adequate vertical drainage in all plant beds, planters, and sod areas. Vertical drilling through any compacted fill to native soil shall be accomplished to insure drainage. If well drained fill is necessary to assure positive drainage, this issue shall be brought up by the Landscape Contractor at time of bidding.

22. UNSUITABLE SUBSOILS
    Locations containing unsuitable subsoil shall be treated by one or more of the following:

    A. Where unsuitability is deemed by Owner or Owner's Representative to be due to excessive compaction caused by heavy equipment and where natural subsoil is other than AASHTO classification of A6 or A7, loosen such areas with spikes, discing, or other means to loosen soil to condition acceptable to Owner. Loosen soil to minimum depth of 12 inches with additional loosening as required to obtain adequate drainage. Contractor may introduce peat moss, sand, or organic matter into the subsoil to obtain adequate measures shall be considered as incidental, without additional cost to Owner.

    B. Where unsuitability is deemed by Owner or Owner's Representative to be due to presence of boards, mortar, concrete, graded aggregate base, or other construction materials in sub grade and where natural subsoil is other than AASHTO classification of A6 or A7, remove debris and objectionable material. Such remedial measures shall be considered as incidental, without additional cost to Owner.

    C. Where unsuitability is deemed by Owner to be because natural subsoil falls into AASHTO classification of A6 or A7 and contains moisture in excess of 30 percent, then installation of sub drainage system or other means described elsewhere in Specifications shall be used. Where such conditions have not been known or revealed prior to planting time and they have not been recognized in preparation of The Drawings and Specifications, then Owner shall issue pricing order to install proper remedial measures.

    D. Planting beds where existing subsoil is determined by Owner to be unsuitable for plant growth in accordance paragraph Unsuitable Subsoil herein shall be excavated to a depth of 12 inches or as needed to provide adequate drainage. Replace excavated soil with planting soil.

23. The Landscape Contractor shall insure that his work does not interrupt established or projected drainage patterns.

24. The Landscape Contractor shall prune, shape and remove dead foliage/limbs from existing plant material to remain. Confirm with the Landscape Architect or Owner the extent of work required at time of Bidding.

25. Mulch - All plant beds shall be top dressed with 3" brown shredded mulch (or approved equal).

26. Transplanted Material - The Landscape Contractor shall be responsible for determining and evaluating which plant materials are suitable for transplanting and shall verify this with the Landscape Architect or Owner. The Landscape Contractor shall take all reasonable, horticulturally acceptable measures to assure the successful transplanting of determined plant materials. The Landscape Contractor shall be responsible for replacing any relocated plant materials which die if such measures are not taken, as determined by the Landscape Architect or Owner. Replacement plants shall be of identical species and size if required.

27. MAINTENANCE PRIOR TO FINAL INSPECTION AND ACCEPTANCE:

    Maintenance shall commence after each plant is planted and the maintenance period shall continue until complete project has been accepted by the Landscape Architect or Owner. Extreme care shall be taken to instruct the Owner or his representatives in general maintenance procedures.

    Plant maintenance shall include watering, pruning, weeding, cultivating, mulching, tightening, and repairing of guys, replacement of sick or dead plants, resetting plants to proper grades or upright positions and restoration of the planting saucer and all other care needed for proper growth of the plants.

    During the maintenance period and up to the date of final acceptance, the Landscape Contractor shall do all seasonal spraying and/or dusting of trees and shrubs. Upon completion of all planting, an inspection for acceptance of work will be held. The Landscape Contractor shall notify the Landscape Architect or Owner for scheduling of the inspection 10 days prior to the anticipated date.

    At the time of the inspection, if all of the materials are acceptable, a written notice will be given by the Landscape Architect or Owner to the Landscape Contractor Stating the date when the Maintenance Period ends.

GUARANTEE AND REPLACEMENT:

All plant materials shall be guaranteed for one (1) year from the time of final inspection and interim acceptance shall be alive and in satisfactory growth for each specific kind of plant at the end of the guaranteed period.

At the end of the guarantee period, any plant required under this contract that is dead or not in satisfactory growth, as determined by the Owner or the Landscape Architect, shall be removed and replaced. Replacement plants shall have an extended guarantee, as noted above, from time of replacement.

All replacements shall be planted of the same kind and size as specified on the plant list. They shall be the responsibility of the Landscape Contractor.

PLANT LIST

SYM	COMMON NAME	BOTANICAL NAME	DESCRIPTION	DROUGHT TOL.	QTY.
TREES					
LI	NATCHEZ CRAPE MYRTLE	LAGERSTROEMIA INDICA "NATCHEZ"	100 GAL., 3" CAL., 12' MIN HT., 6' SPRD., 7' CT.	HIGH	23
QV	HIGHRISE LIVE OAK	QUERCUS VIRGINIANA 'HIGHRISE'	200 GAL., 4" CAL., 20' MIN. HT., 8' SPRD., 7' CT., NATIVE	HIGH	11
SP	CABBAGE PALM	SABAL PALMETTO	14' CT., SLICK, REGENERATED, NATIVE	HIGH	22
EX	EXISTING TREES	EXISTING TREES	REFER TO PLAN		
SHRUBS AND GROUNDCOVER					
AP	BABY PETE AGAPANTHUS	AGAPANTHUS 'BABY PETE'	3 GAL., 5PPP, 12" OC., FULL, NON-NATIVE	MEDIUM	1,749
HP	FIREFLY FIREBUSH	HAMELIA PATENS 'FIREFLY'	7 GAL., 30" MIN. HT., 15" SPRD., 30" OC., NON-NATIVE	HIGH	232
MC	MUHLY GRASS	MUHLENBERGIA CAPILLARIS	3 GAL, 15" MIN. HT., 10" SPRD., 30" OC., NATIVE	HIGH	327
MS	POWDERPUFF MIMOSA	MIMOSA STIGULOSA	1 GAL., 4" HT., 8" SPRD., 12" OC., NATIVE	MEDIUM	1,802
RM	PEACH DRIFT ROSE	ROSA 'MEIGGILI'	3 GAL., 10" MIN. HT., 15" SPRD., 30" OC., NON-NATIVE	HIGH	180
VOS	MRS SCHILLERS VIBURNUM	VIBURNUM OBOVATUM 'MRS SCHILLERS'	7 GAL., 20" MIN. HT., 15" SPRD., 30" OC., NATIVE	HIGH	98
BAHIA	ARGENTINE BAHIA SOD	PASPALUM NOTATUM 'ARGENTINE'	SOLID SOD, CONTRACTOR TO VERIFY QTY.		
ROOT BARRIER					

NOTE:
1. PLANT DESCRIPTIONS ARE FOR MINIMUM ACCEPTABLE SPECIFICATIONS. ALL CRITERIA LISTED FOR CONTAINER SIZE, CALIPER, HEIGHT, SPREAD, ETC. MUST BE MET FOR PLANT MATERIAL ACCEPTANCE. FOR EXAMPLE, IF A THREE GALLON SHRUB DOES NOT MEET THE HEIGHT OR SPREAD SPECIFICATION, IT WILL NOT BE ACCEPTED.
2. IF SPECIFIED PLANTS ARE UNAVAILABLE AT TIME OF CONSTRUCTION, CONTRACTOR MAY REPLACE SPECIFIED PLANTS WITH PLANTS APPROVED BY LANDSCAPE ARCHITECT AND CITY STAFF.
3. ALL OPEN SPACE AREAS WITHIN THE PROJECT SHALL BE SODDED UNLESS PAVED, SEEDED AND MULCHED OR PLANTED WITH SHRUBS AND GROUND COVER.
4. ALL LANDSCAPED AREAS WILL BE 100% IRRIGATED WITH A CENTRAL AUTOMATIC IRRIGATION SYSTEM INCLUDING A RAIN SENSOR.
5. CONTRACTOR SHALL REPLACE ANY EXISTING SOD OR OTHER PLANT MATERIALS DAMAGED DURING CONSTRUCTION IN AREAS THAT ARE OUTSIDE PROPOSED LANDSCAPE AS SHOWN ON THE PLAN.
6. NO TREES OR BUSHES SHALL BE PLACED ON TOP OF OR IN CLOSE PROXIMITY TO PUBLIC UTILITIES THAT WILL IMPACT UTILITIES AT MATURITY.
7. TREE ROOT BARRIER TO BE INSTALLED FOR TREES LOCATED WITHIN 10' OF PUBLIC SIDEWALKS, CURBS, AND UTILITIES.

NATIVE CALCULATIONS

TREES

REQUIRED: 40%
56 x .04 = 23

PROVIDED: 33

SHRUBS/GROUNDCOVER

REQUIRED: 4,503 x .04 = 1,801
PROVIDED: 2,316

Always call 811 two full business days before you dig
Sunshine811.com
www.sunshine811.com

THIS SHEET NOT VALID FOR CONSTRUCTION UNLESS STAMPED APPROVED

No.	Date	Revision	By	No.	Date	Revision	By
1				4			
2				5			
3				6			
4				7			

cph
www.cphcorp.com
A Full Service A & E Firm
Architects M/E/P
Engineers Planners
Environmental Surveyors
Landscape Architects Traffic/Transportation
Offices In: • Florida • Puerto Rico • Connecticut • Maryland • Texas

Designed by:	JKW	Date: 9/11/2023
Drawn by:	RES	Scale: AS NOTED
Checked by:	JKW	
Approved by:	JKW	
Job No.	O6012	©2023

Oakland Ave.
City of Ocoee, Florida

Plans Prepared By:
CPH, Inc.
500 W. Fulton St. Sanford, FL 32771
Ph: 407.322.6841
Licenses:
Eng. C.O.A. No. 3215 Arch. Lic. No. AA26000926
Survey L.B. No. 7143 Landscp. Lic. No. LC0000298

Landscape Notes and Details

Sheet No.
L-5

Drawing name: J:\O6012\Landscape\DWG\Preliminary Design\Plans\O6012-LSP.dwg Sep 11, 2023 - 9:14am rcrouch

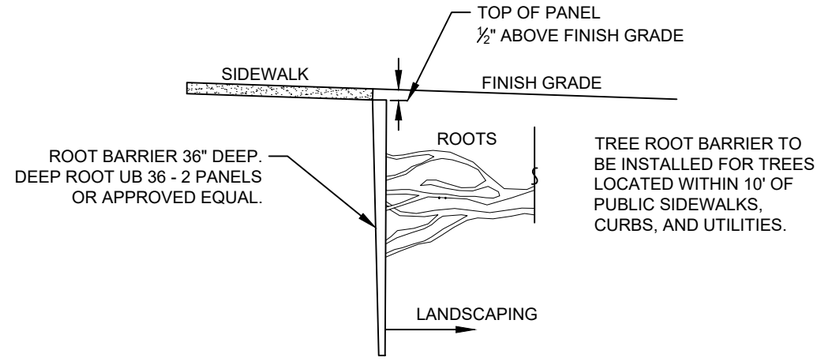

ROOT BARRIER DETAIL

N.T.S.

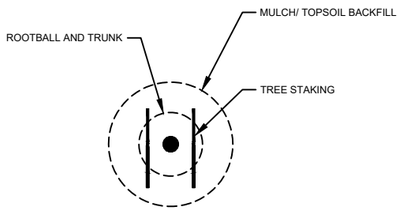

PLAN

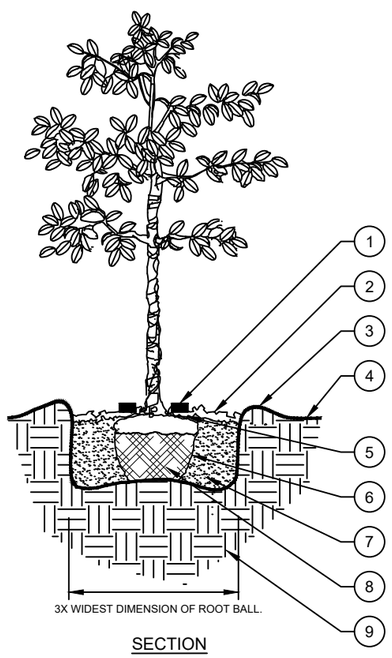

SECTION

NOTES:

A. FINAL TREE STAKING DETAILS AND PLACEMENT TO BE APPROVED BY OWNER.

B. REMOVE BURLAP, WIRE AND STRAPS (ANYTHING THAT COULD GIRDLE TREE OR RESTRICT ROOT GROWTH) ON UPPER 1/3 OF ROOTBALL.

C. REFER TO LANDSCAPE NOTES OR PLANTING SPECIFICATIONS SECTION 32 9100 FOR THE TYPE OF MULCH MATERIAL TO USE.

D. PRUNE TREE AS DIRECTED BY LANDSCAPE ARCHITECT.

E. BRANCHING HEIGHT AS SPECIFIED ON THE PLANT LIST AND PRUNING PER ANSI A300 (PART I) LATEST UPDATE.

1. **Tree Frog® RBK40pt** FOR UP TO 4" TREE CALIPER OR **Tree Frog® RBK60pt** FOR GREATER THAN 4" AND UP TO 6" TREE CALIPER. REFER TO SITEWORK SPECIFICATIONS FOR APPROVED MATERIALS AND INSTALLATION REQUIREMENTS.
2. ROOT BALL MODIFIED AS REQUIRED. 3" LAYER OF MULCH. NO MORE THAN 1" OF MULCH ON TOP OF ROOT BALL. (REFER TO SPECIFICATIONS FOR MULCH).
3. ROUND-TOPPED SOIL BERM 4" HIGH X 8" WIDE ABOVE ROOT BALL SURFACE SHALL BE CONSTRUCTED AROUND THE ROOT BALL. BERM SHALL BEGIN AT ROOT BALL PERIPHERY.
4. FINISHED GRADE.
5. TOP OF ROOT BALL SHALL BE FLUSH WITH FINISHED GRADE.
6. PRIOR TO MULCHING, LIGHTLY TAMP SOIL AROUND THE ROOT BALL IN 6" LIFTS TO BRACE TREE. DO NOT OVER COMPACT. WHEN THE PLANTING HOLE HAS BEEN BACKFILLED, POUR WATER AROUND THE ROOT BALL TO SETTLE THE SOIL.
7. LOOSENED SOIL. DIG AND TURN THE SOIL TO REDUCE COMPACTION TO THE AREA AND DEPTH SHOWN. BACKFILL MIX: TOPSOIL 75% AND COMPOST 25%.
8. BOTTOM OF ROOT BALL RESTS ON EXISTING OR RECOMPACTED SOIL.
9. UNDISTURBED SUBSOIL.

LARGE TREE PLANTING (14' OR GREATER)

N.T.S.

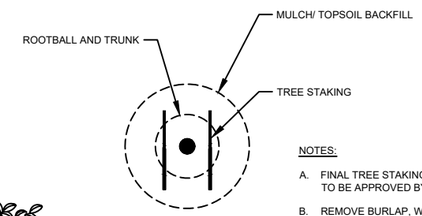

PLAN

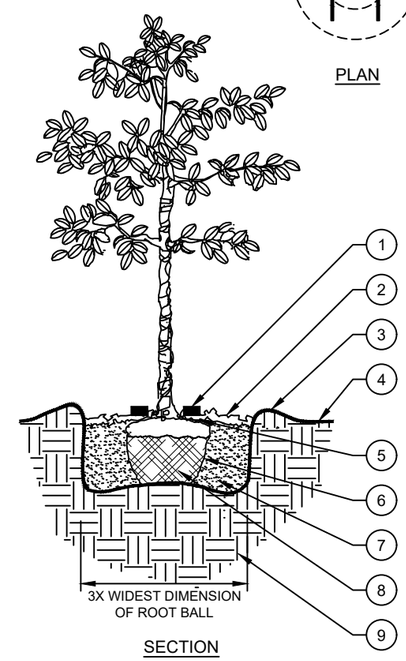

SECTION

NOTES:

A. FINAL TREE STAKING DETAILS AND PLACEMENT TO BE APPROVED BY OWNER.

B. REMOVE BURLAP, WIRE AND STRAPS (ANYTHING THAT COULD GIRDLE TREE OR RESTRICT ROOT GROWTH) ON UPPER 1/3 OF ROOTBALL.

C. REFER TO LANDSCAPE NOTES OR PLANTING SPECIFICATIONS SECTION 32 9100 FOR THE TYPE OF MULCH MATERIAL TO USE.

D. PRUNE TREE AS DIRECTED BY LANDSCAPE ARCHITECT.

E. BRANCHING HEIGHT TO A.A.N. STANDARDS.

1. **Tree Frog® RBK40pt** FOR UP TO 4" TREE CALIPER OR **Tree Frog® RBK60pt** FOR GREATER THAN 4" AND UP TO 6" TREE CALIPER. REFER TO SITEWORK SPECIFICATIONS FOR APPROVED MATERIALS AND INSTALLATION REQUIREMENTS.
2. ROOT BALL MODIFIED AS REQUIRED. 3" LAYER OF MULCH. NO MORE THAN 1" OF MULCH ON TOP OF ROOT BALL. (REFER TO SPECIFICATIONS FOR MULCH).
3. ROUND-TOPPED SOIL BERM 4" HIGH X 8" WIDE ABOVE ROOT BALL SURFACE SHALL BE CONSTRUCTED AROUND THE ROOT BALL. BERM SHALL BEGIN AT ROOT BALL PERIPHERY.
4. FINISHED GRADE.
5. TOP OF ROOT BALL SHALL BE FLUSH WITH FINISHED GRADE.
6. PRIOR TO MULCHING, LIGHTLY TAMP SOIL AROUND THE ROOT BALL IN 6" LIFTS TO BRACE TREE. DO NOT OVER COMPACT. WHEN THE PLANTING HOLE HAS BEEN BACKFILLED, POUR WATER AROUND THE ROOT BALL TO SETTLE THE SOIL.
7. LOOSENED SOIL. DIG AND TURN THE SOIL TO REDUCE COMPACTION TO THE AREA AND DEPTH SHOWN. BACKFILL MIX: TOPSOIL 75% AND COMPOST 25%.
8. BOTTOM OF ROOT BALL RESTS ON EXISTING OR RECOMPACTED SOIL.
9. UNDISTURBED SUBSOIL.

SMALL TREE PLANTING (14' OR LESS)

N.T.S.

Always call 811 two full business days before you dig

Sunshine811.com

www.sunshine811.com

THIS SHEET NOT VALID FOR CONSTRUCTION UNLESS STAMPED APPROVED

No.	Date	Revision	By	No.	Date	Revision	By
1				1			
2				2			
3				3			
4				4			

cph — www.cphcorp.com

A Full Service A & E Firm: Architects, Engineers, Environmental, Landscape Architects, M/E/P, Planners, Surveyors, Traffic/Transportation

Offices In: • Florida • Puerto Rico • Connecticut • Maryland • Texas

Designed by:	JKW	Date: 9/11/2023
Drawn by:	RES	Scale: AS NOTED
Checked by:	JKW	
Approved by:	JKW	
Job No.	O6012	©2023

Oakland Ave.
City of Ocoee, Florida

Plans Prepared By: CPH, Inc.
500 W. Fulton St. Sanford, FL 32771
Ph: 407.322.6841
Licenses:
Eng. C.O.A. No. 3215 Arch. Lic. No. AA2600926
Survey L.B. No. 7143 Landscp. Lic. No. LC0000298

Landscape Details

Sheet No. *L-6*

Drawing name: J:\O6012\Landscape\DWG\Preliminary\Design\Plans\O6012-LSP.dwg Sep 11, 2023 - 9:14am rcrouch

NOTES
1. DO NOT SCALE FROM THIS DRAWING
2. THIS DRAWING IS CONSTRUCTED USING LAYERS WHICH CAN BE TURNED ON OR OFF AS REQUIRED
3. DUE TO SETTLEMENT ALL TREES SHOULD BE RE-TENSIONED AFTER PLANTING

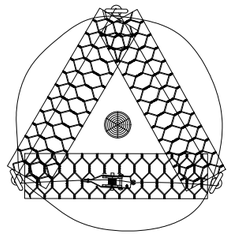

RF#P 3 Leg

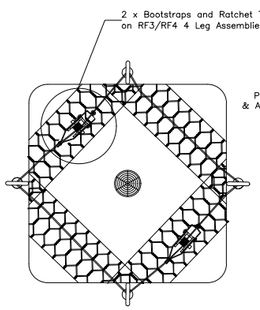

RF#P 4 Leg

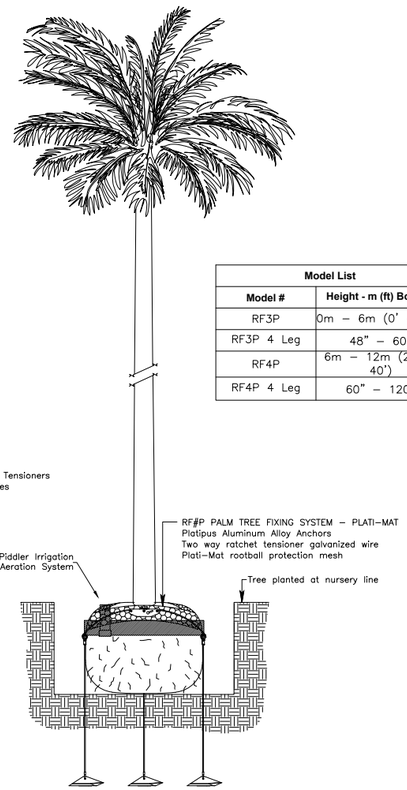

Model List	
Model #	Height - m (ft) Box - in
RF3P	0m – 6m (0' – 20')
RF3P 4 Leg	48" – 60"
RF4P	6m – 12m (20' – 40')
RF4P 4 Leg	60" – 120"

© 2015, PLATIPUS ANCHORS

PALM STAKING SYSTEM NTS

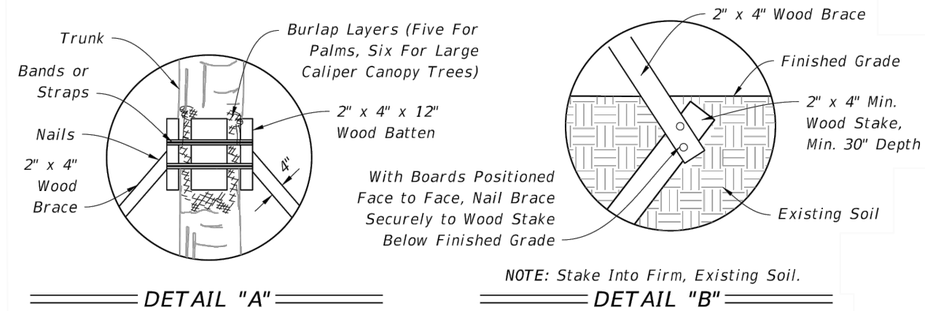

DETAIL "A"

NOTE: Stake Into Firm, Existing Soil.

DETAIL "B"

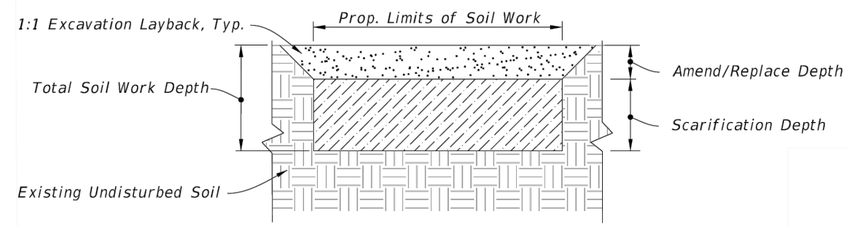

(Typical Section)

LANDSCAPE SOIL WORK

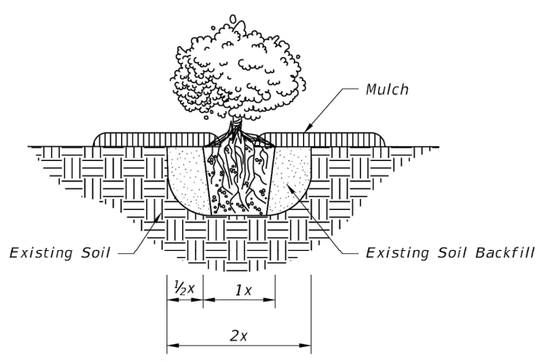

Planting Pit 2 Times Width Of Rootball

GROUND COVER/SHRUB PLANTING

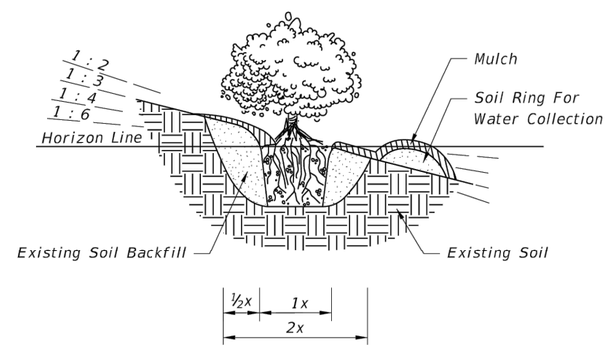

Planting Pit 2 Times Width Of Rootball

NOTE: Slope Provided As Rise:Run.

GROUND COVER/SHRUB PLANTING ON SLOPE

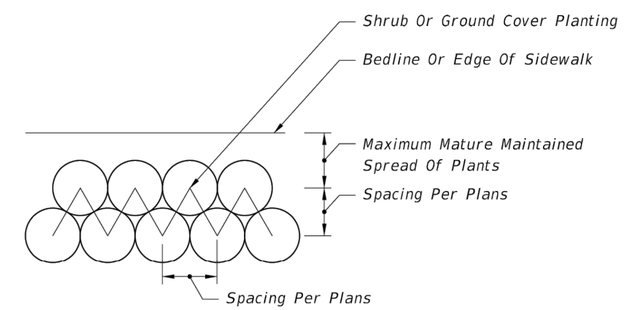

GROUND COVER/SHRUB LAYOUT DETAIL

Always call 811 two full business days before you dig
Sunshine811.com
www.sunshine811.com

THIS SHEET NOT VALID FOR CONSTRUCTION UNLESS STAMPED APPROVED

No.	Date	Revision	By	No.	Date	Revision	By
1				1			
2				2			
3				3			
4				4			

cph
www.cphcorp.com
A Full Service A & E Firm
Architects M/E/P
Engineers Planners
Environmental Surveyors
Landscape Architects Traffic/Transportation
Offices In: • Florida • Puerto Rico • Connecticut • Maryland • Texas

Designed by:	JKW	Date: 9/11/2023
Drawn by:	RES	Scale: AS NOTED
Checked by:	JKW	
Approved by:	JKW	
Job No.	O6012	©2023

Oakland Ave.
City of Ocoee, Florida

Plans Prepared By:
CPH, Inc.
500 W. Fulton St. Sanford, FL 32771
Ph: 407.322.6841
Licenses:
Eng. C.O.A. No. 3215 Arch. Lic. No. AA2600926
Survey L.B. No. 7143 Landscp. Lic. No. LC0000298

Landscape Details

Sheet No. L-7

Drawing name: J:\O6012\Landscape\DWG\Preliminary\Design\Plans\O6012-LSP.dwg Sep 11, 2023 - 9:14am rscrouch

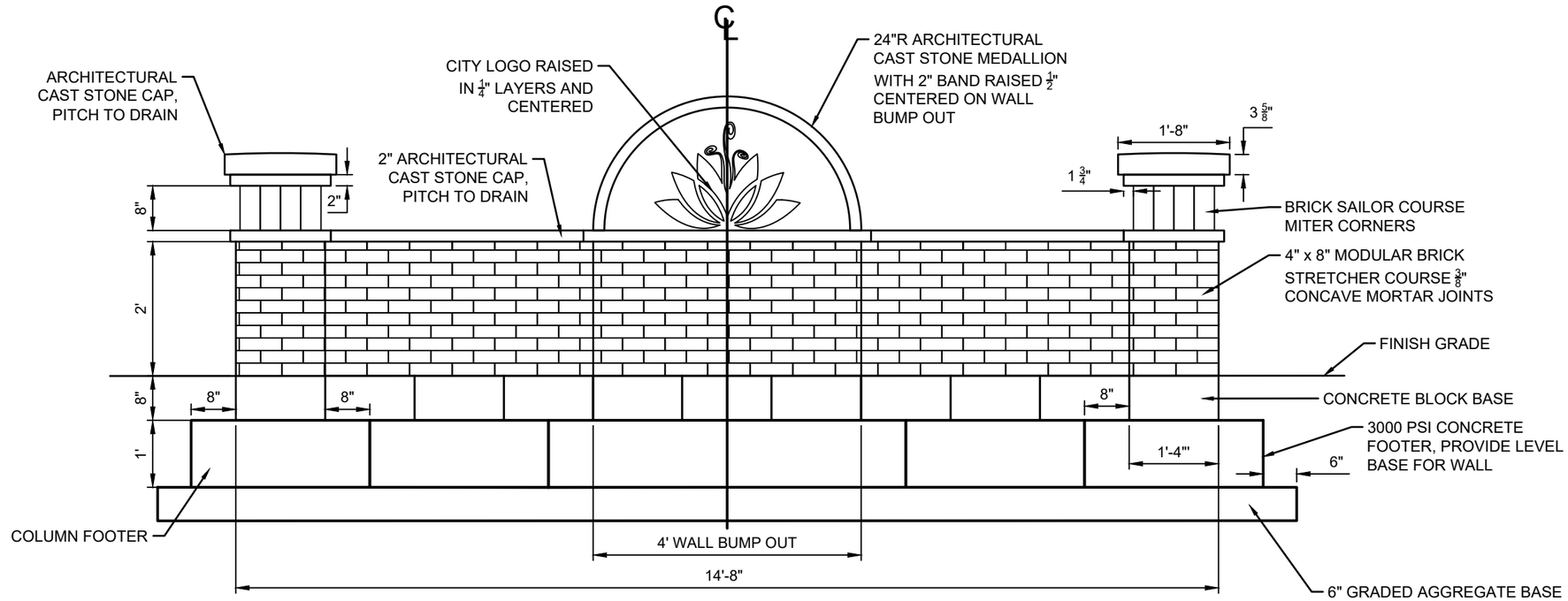

WALL DETAIL

SCALE 1/2" = 1'

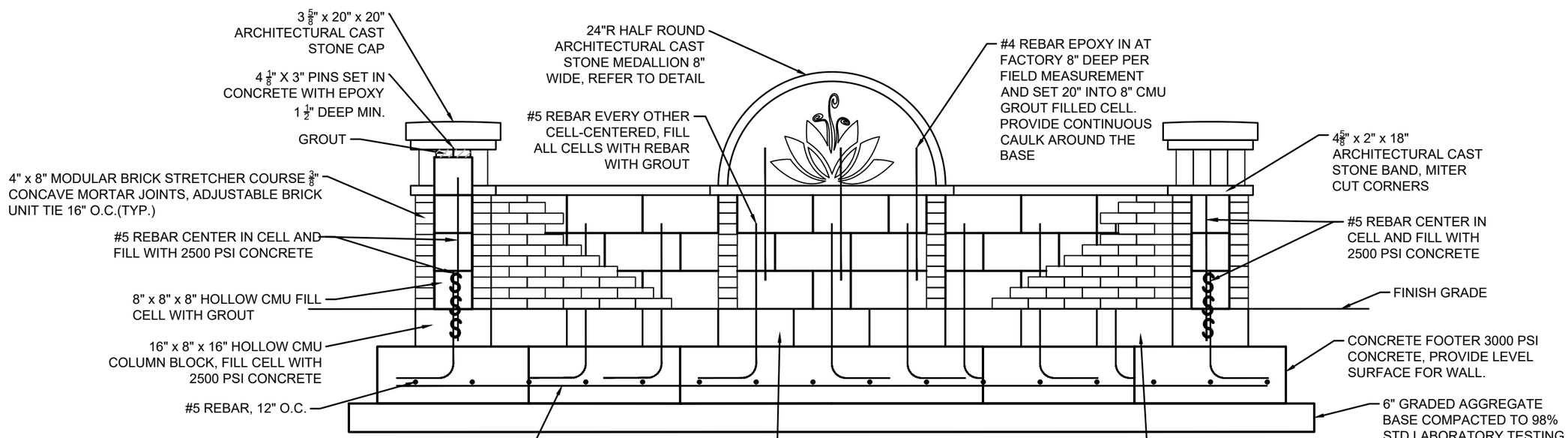

WALL SECTION DETAIL

SCALE 1/2" = 1'

No.	Date	Revision	By	No.	Date	Revision	By
1				1			
2				2			
3				3			
4				4			

cph — www.cphcorp.com

A Full Service A & E Firm: Architects, Engineers, Environmental, Landscape Architects, M/E/P, Planners, Surveyors, Traffic/Transportation

Offices In: • Florida • Puerto Rico • Connecticut • Maryland • Texas

Designed by:	JKW	Date: 9/11/2023	
Drawn by:	RES	Scale: AS NOTED	
Checked by:	JKW		
Approved by:	JKW		
Job No.	O6012	©2023	

Oakland Ave.
City of Ocoee, Florida

Plans Prepared By: CPH, Inc.
500 W. Fulton St. Sanford, FL 32771
Ph: 407.322.6841
Licenses:
Eng. C.O.A. No. 3215 Arch. Lic. No. AA2600926
Survey L.B. No. 7143 Landscp. Lic. No. LC0000298

Hardscape Drawing
Wall Detail

Sheet No. *H-1*

Drawing name: J:\O6012\Landscape\DWG\Preliminary\Design\Plans\O6012-H1SP.dwg Sep 11, 2023 - 9:14am rcrouch

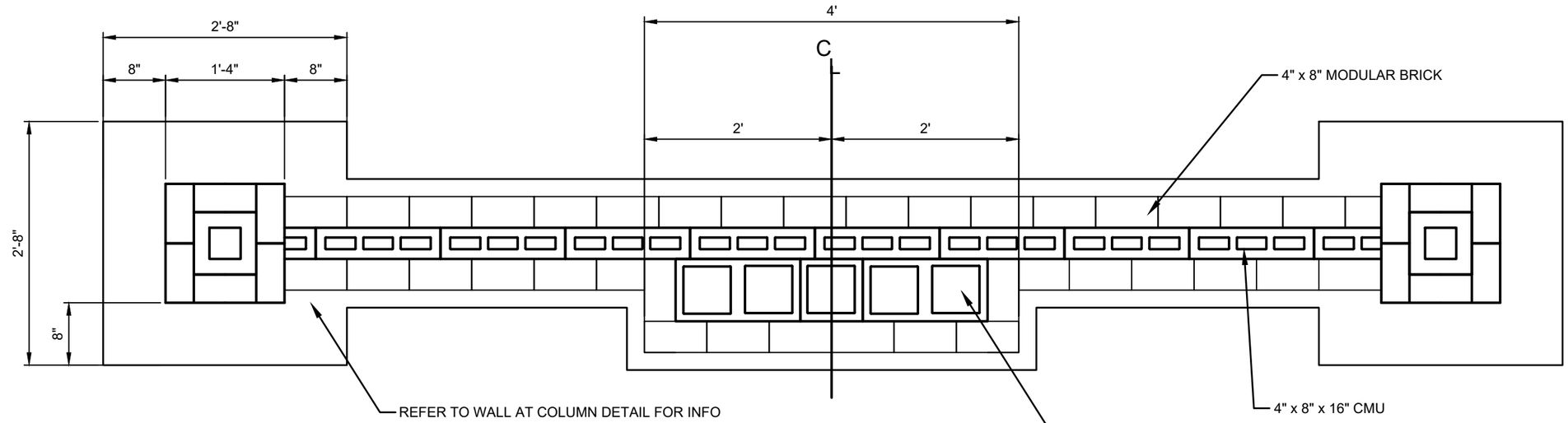

WALL SECTION DETAIL

SCALE $\frac{3}{4}$" = 1'

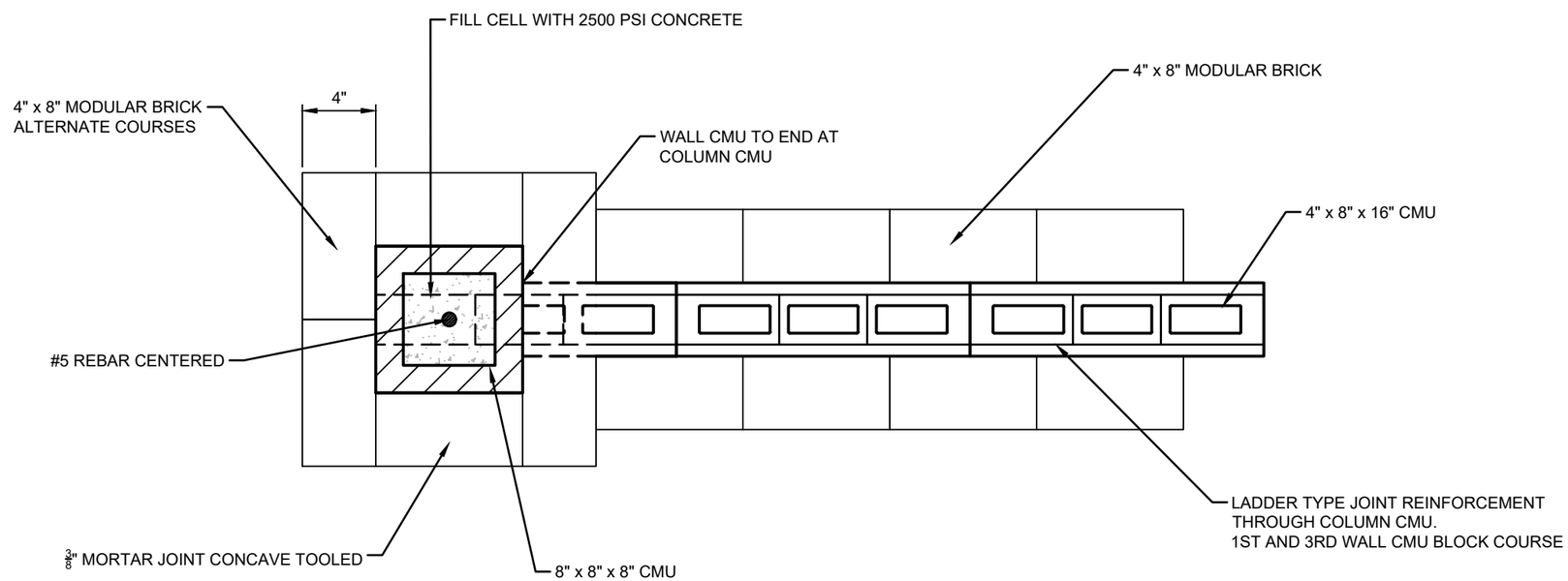

WALL AT COLUMN DETAIL

SCALE 1 $\frac{1}{2}$" = 1'

No.	Date	Revision	By	No.	Date	Revision	By
1				1			
2				2			
3				3			
4				4			

cph www.cphcorp.com

A Full Service A & E Firm
Architects, Engineers, Environmental, Landscape Architects, M/E/P, Planners, Surveyors, Traffic/Transportation

Offices In: • Florida • Puerto Rico • Connecticut • Maryland • Texas

Designed by:	JKW	Date: 9/11/2023	
Drawn by:	RES	Scale: AS NOTED	
Checked by:	JKW		
Approved by:	JKW		
Job No.	O6012	©2023	

Oakland Ave.
City of Ocoee, Florida

Plans Prepared By:
CPH, Inc.
500 W. Fulton St. Sanford, FL 32771
Ph: 407.322.6841
Licenses:
Eng. C.O.A. No. 3215 Arch. Lic. No. AA2600926
Survey L.B. No. 7143 Landscp. Lic. No. LC0000298

Hardscape Drawing
Wall Detail

Sheet No.
H-2

Drawing name: J:\O6012\Landscape\DWG\Preliminary\Design\Plans\O6012-HSP.dwg Sep 11, 2023 - 9:14am rcrouch

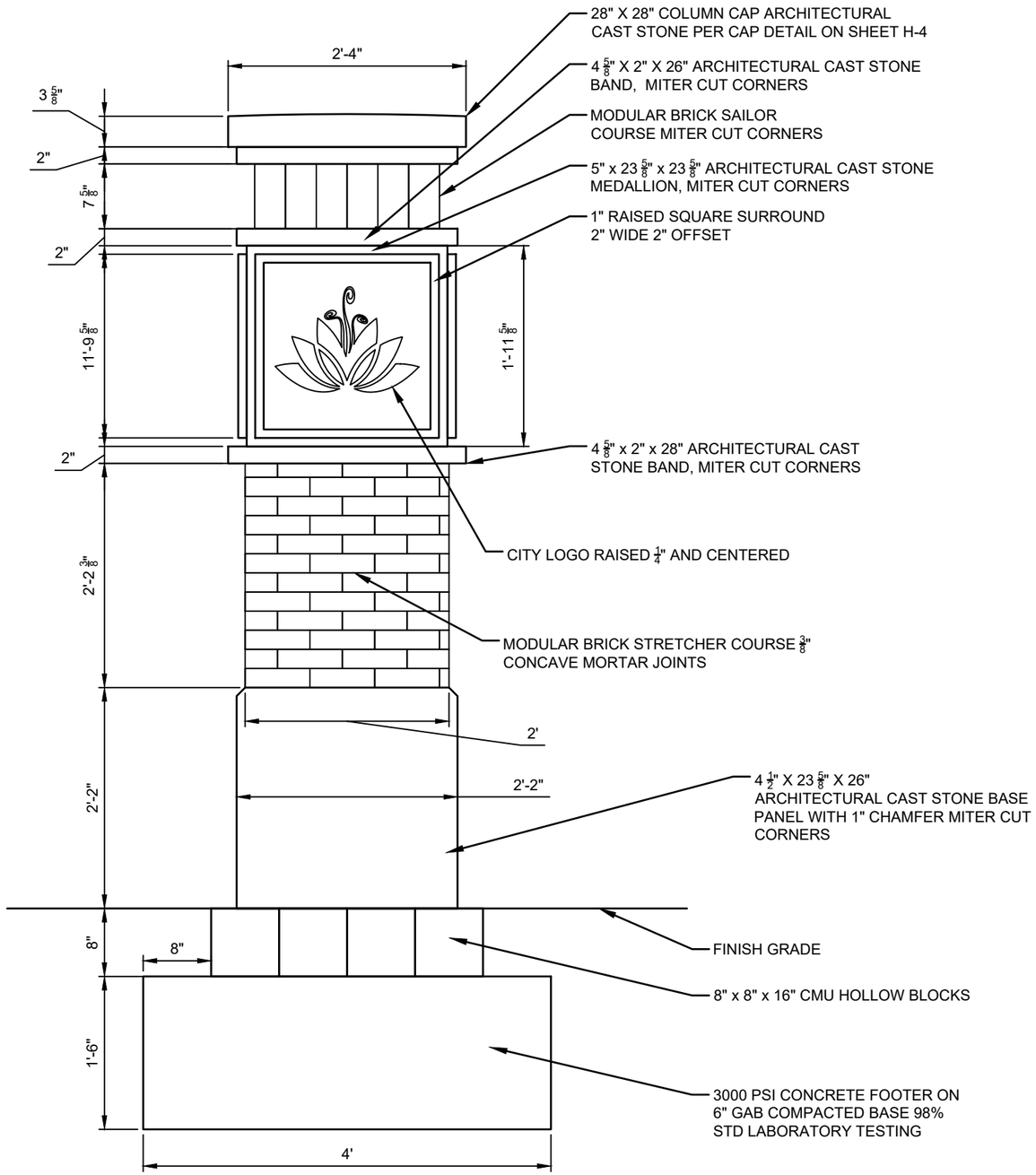

COLUMN DETAIL

SCALE 3/4" = 1'

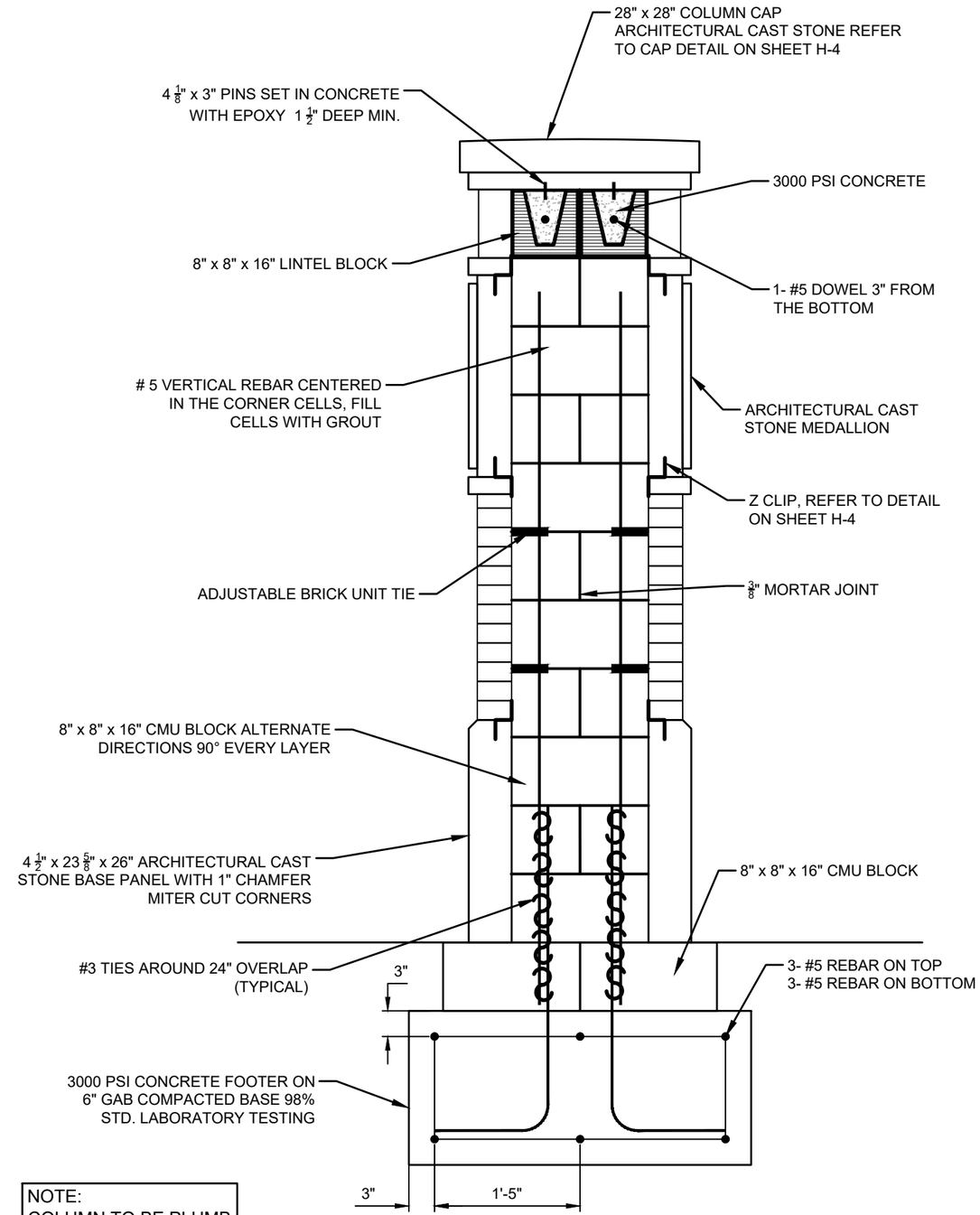

NOTE:
COLUMN TO BE PLUMB

COLUMN SECTION

SCALE 3/4" = 1'

No.	Date	Revision	By	No.	Date	Revision	By
1				1			
2				2			
3				3			
4				4			

cph — www.cphcorp.com

A Full Service A & E Firm: Architects, Engineers, Environmental, Landscape Architects, M/E/P, Planners, Surveyors, Traffic/Transportation

Offices In: • Florida • Puerto Rico • Connecticut • Maryland • Texas

Designed by:	JKW
Drawn by:	RES
Checked by:	JKW
Approved by:	JKW
Job No.	O6012

Date: 9/11/2023
Scale: AS NOTED
©2023

Oakland Ave.
City of Ocoee, Florida

Plans Prepared By:
CPH, Inc.
500 W. Fulton St. Sanford, FL 32771
Ph: 407.322.6841
Licenses:
Eng. C.O.A. No. 3215 Arch. Lic. No. AA2600926
Survey L.B. No. 7143 Landscp. Lic. No. LC0000298

Hardscape Drawing
Column Detail

Sheet No.
H-3

Drawing name: J:\O6012\Landscape\DWG\Preliminar\Design\Plans\O6012-HSP.dwg Sep 11, 2023 - 9:14am rccouch

NOTE: CONSTRUCT AS 1 PIECE

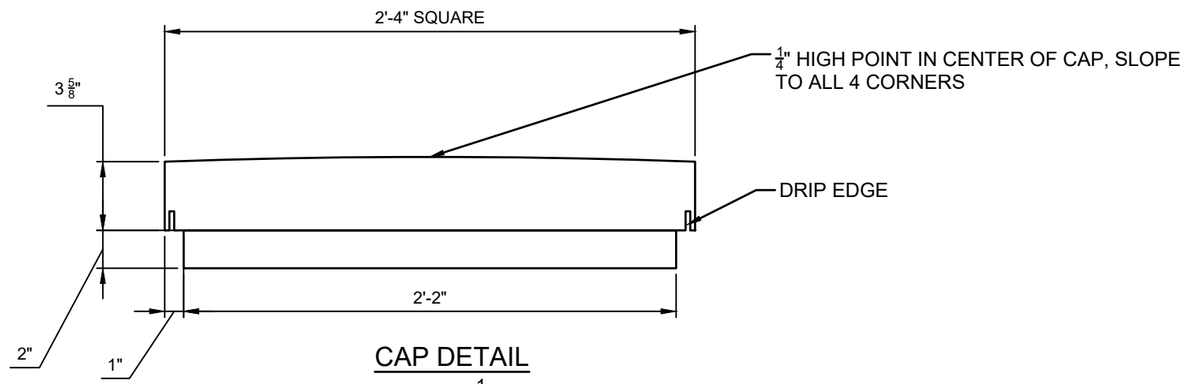

CAP DETAIL

SCALE $1\frac{1}{2}$" = 1'

NOTE: PROVIDE 4 Z CLIPS PER PANEL, 2 AT THE TOP AND 2 AT THE BOTTOM OFFSET THE EDGES OF THE PANELS BY 4" MINIMUM

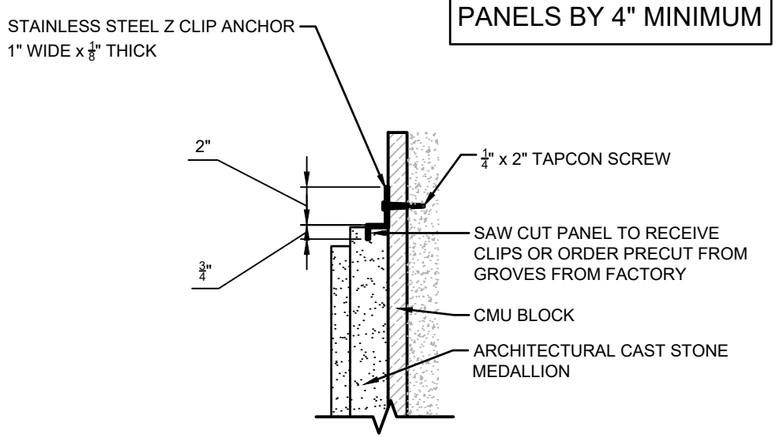

Z CLIP DETAIL

SCALE $1\frac{1}{2}$" = 1'

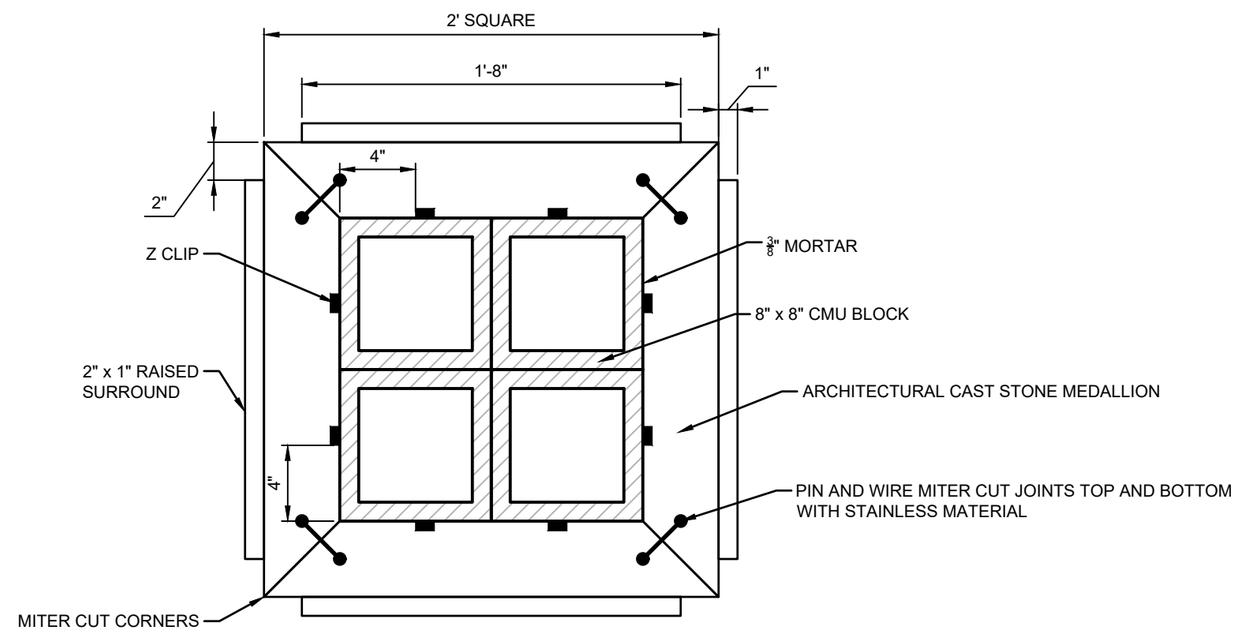

MEDALLION PLAN DETAIL

SCALE $1\frac{1}{2}$" = 1'

No.	Date	Revision	By	No.	Date	Revision	By
1				1			
2				2			
3				3			
4				4			

cph — www.cphcorp.com

A Full Service A & E Firm: Architects, Engineers, Environmental, Landscape Architects, M/E/P, Planners, Surveyors, Traffic/Transportation

Offices In: • Florida • Puerto Rico • Connecticut • Maryland • Texas

Designed by:	JKW
Drawn by:	RES
Checked by:	JKW
Approved by:	JKW
Job No.	O6012

Date: 9/11/2023
Scale: AS NOTED
©2023

Oakland Ave.
City of Ocoee, Florida

Plans Prepared By:
CPH, Inc.
500 W. Fulton St. Sanford, FL 32771
Ph: 407.322.6841
Licenses:
Eng. C.O.A. No. 3215 *Arch. Lic. No. AA26000926*
Survey L.B. No. 7143 *Landscp. Lic. No. LC0000298*

Hardscape Drawing
Column Detail

Sheet No.
H-4

Drawing name: J:\O6012\Landscape\DWG\Preliminar\Design\Plans\O6012-HSP.dwg Sep 11, 2023 - 9:14am rccouch

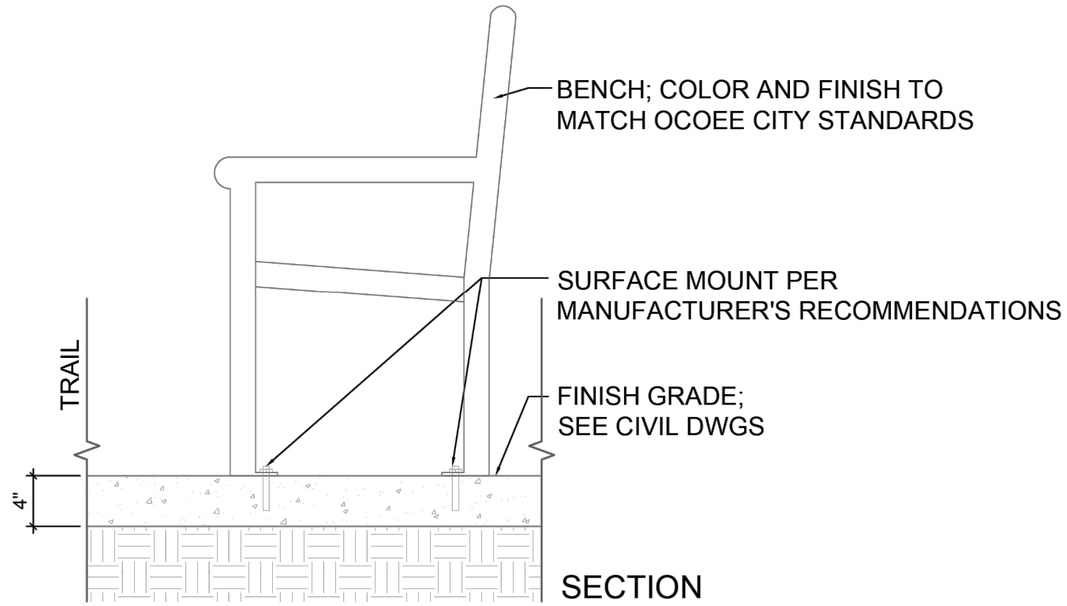

SECTION

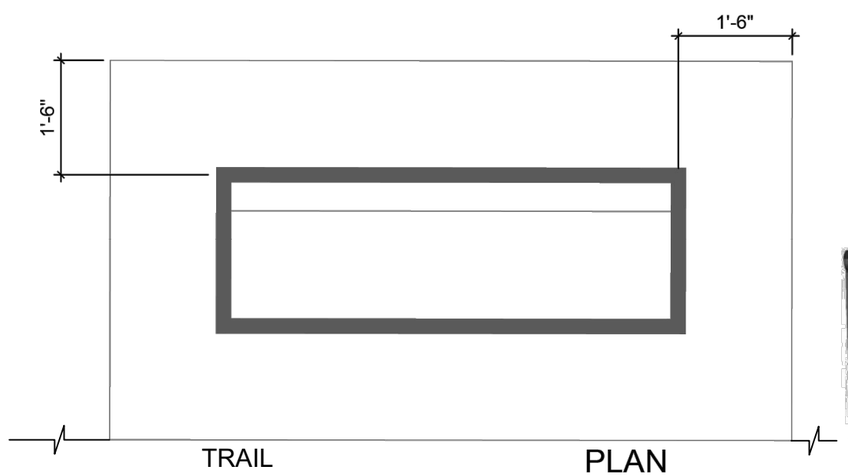

PLAN

BENCH DETAIL
SCALE: PLAN 1/2" = 1'

No.	Date	Revision	By	No.	Date	Revision	By
1				1			
2				2			
3				3			
4				4			

cph — www.cphcorp.com

A Full Service A & E Firm
Architects, Engineers, Environmental, Landscape Architects, M/E/P, Planners, Surveyors, Traffic/Transportation

Offices In: • Florida • Puerto Rico • Connecticut • Maryland • Texas

Designed by:	JKW	Date: 9/11/2023
Drawn by:	RES	Scale: AS NOTED
Checked by:	JKW	
Approved by:	JKW	
Job No.	O6012	©2023

Oakland Ave.
City of Ocoee, Florida

Plans Prepared By:
CPH, Inc.
500 W. Fulton St. Sanford, FL 32771
Ph: 407.322.6841
Licenses:
Eng. C.O.A. No. 3215 Arch. Lic. No. AA2600926
Survey L.B. No. 7143 Landscp. Lic. No. LC0000298

Hardscape Details

Sheet No.
H-5

Drawing name: J:\O6012\Landscape\DWG\Preliminar\Design\Plans\O6012-HSP.dwg Sep 11, 2023 - 9:14am rcrouch

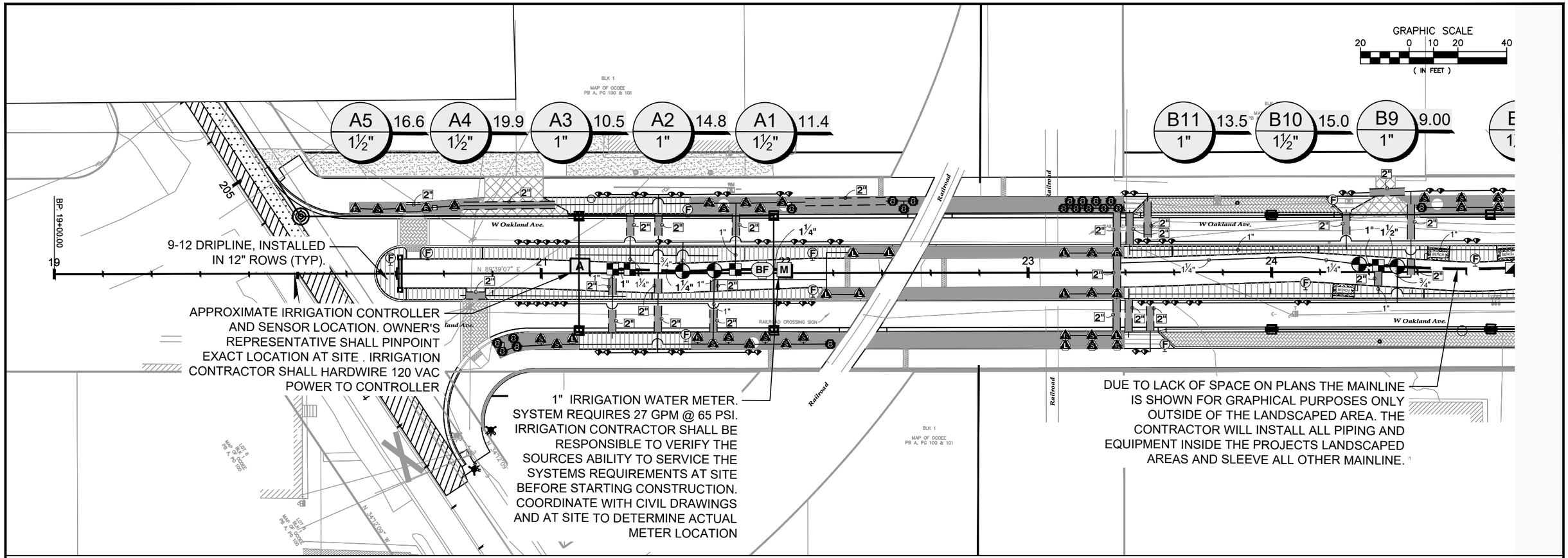

THE IRRIGATION SYSTEM IS TO BE CONVERTED TO RECLAIMED WATER ONCE THE RECLAIMED WATER SERVICE LINE IS AVAILABLE. THE IRRIGATION CONTRACTOR IS TO INSTALL ALL BELOW-GROUND EQUIPMENT TO THE LOCAL CODES PERTAINING TO THE USE OF RECLAIMED FOR IRRIGATION. ONCE THE RECLAIMED WATER SERVICE BECOMES AVAILABLE THE SYSTEM SHALL MEET ALL RE-USE WATER CODES.

THESE PLANS ARE DIAGRAMMATIC OF THE WORK TO BE PERFORMED. ALL LANDSCAPED AREAS ARE TO RECEIVED 100% COVERAGE. INSTALL THIS IRRIGATION SYSTEM PER THE SITE CONDITIONS, AVAILABLE FLOW/PRESSURE AND MANUFACTURERS RECOMMENDATIONS. ADJUST ZONE FLOWS TO ACCOMMODATE THE AVAILABLE MAINLINE FLOWS AND PRESSURES.

THE DESIGN PROFESSIONAL DOES NOT ACCEPT ANY/ALL RESPONSIBILITY AND/OR LIABILITY FOR PROBLEMS WHICH ARISE FROM FAILURE TO FOLLOW THESE PLANS, SPECIFICATIONS AND DESIGN INTENT THEY CONVEY OR PROBLEMS WHICH ARISE FROM OTHERS' FAILURE TO OBTAIN AND/OR FOLLOW THE DESIGN PROFESSIONALS GUIDANCE WITH RESPECT TO ANY ERRORS, OMISSIONS, INCONSISTENCIES, AMBIGUITIES OR CONFLICTS WHICH ARE ALLEGED.

Always call 811 two full business days before you dig
Sunshine811.com
www.sunshine811.com

IRR. DESIGN
AN IRRIGATION DESIGN COMPANY
3215 ELLEN DR.
ORLANDO, FLORIDA 32806
PHONE (407) 859-5790
www.irrdesign.com
Jason McElroy
irrdesign@gmail.com

THIS SHEET NOT VALID FOR CONSTRUCTION UNLESS STAMPED APPROVED

No.	Date	Revision	By	No.	Date	Revision	By
1				5			
2				6			
3				7			
4				8			

cph
www.cphcorp.com
A Full Service A & E Firm
Architects M/E/P
Engineers Planners
Environmental Surveyors
Landscape Architects Traffic/Transportation
Offices In: • Florida • Puerto Rico • Connecticut • Maryland • Texas

Designed by:	JKW	Date: 9/11/2023	
Drawn by:	RES	Scale: AS NOTED	
Checked by:	JKW		
Approved by:	JKW		
Job No.	O6012	©2023	

Oakland Ave.
City of Ocoee, Florida

Plans Prepared By:
CPH, Inc.
500 W. Fulton St. Sanford, FL 32771
Ph: 407.322.6841
Licenses:
Eng. C.O.A. No. 3215 Arch. Lic. No. AA2600926
Survey L.B. No. 7143 Landscp. Lic. No. LC0000298

Irrigation Plan
Sta. 20+00 to Sta. 25+00

Sheet No.
IR-1

Drawing name: J:\O6012\Landscape\DWG\Preliminary\Design\Plans\O6012-IRR.dwg Sep 11, 2023 - 9:14am rcrouch

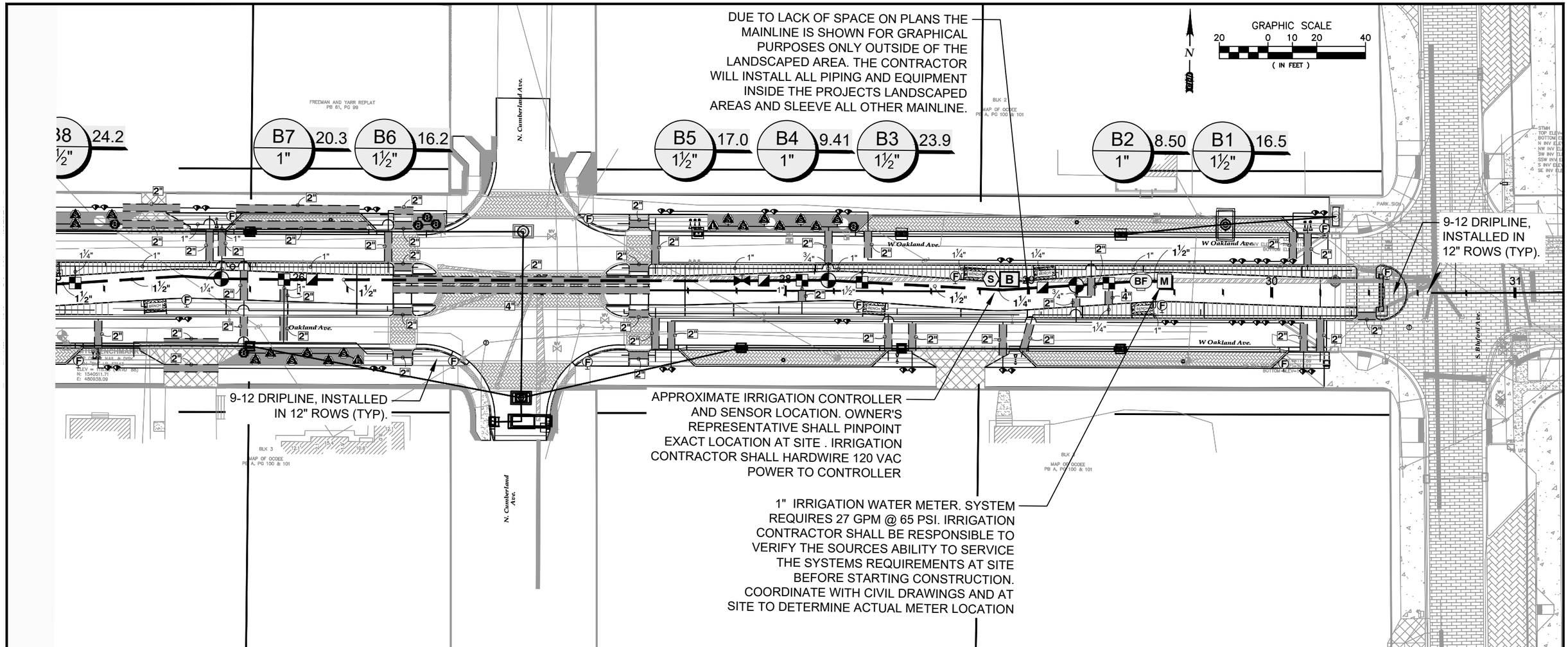

THE IRRIGATION SYSTEM IS TO BE CONVERTED TO RECLAIMED WATER ONCE THE RECLAIMED WATER SERVICE LINE IS AVAILABLE. THE IRRIGATION CONTRACTOR IS TO INSTALL ALL BELOW-GROUND EQUIPMENT TO THE LOCAL CODES PERTAINING TO THE USE OF RECLAIMED FOR IRRIGATION. ONCE THE RECLAIMED WATER SERVICE BECOMES AVAILABLE THE SYSTEM SHALL MEET ALL RE-USE WATER CODES.

THESE PLANS ARE DIAGRAMMATIC OF THE WORK TO BE PERFORMED. ALL LANDSCAPED AREAS ARE TO RECEIVED 100% COVERAGE. INSTALL THIS IRRIGATION SYSTEM PER THE SITE CONDITIONS, AVAILABLE FLOW/PRESSURE AND MANUFACTURERS RECOMMENDATIONS. ADJUST ZONE FLOWS TO ACCOMMODATE THE AVAILABLE MAINLINE FLOWS AND PRESSURES.

THE DESIGN PROFESSIONAL DOES NOT ACCEPT ANY/ALL RESPONSIBILITY AND/OR LIABILITY FOR PROBLEMS WHICH ARISE FROM FAILURE TO FOLLOW THESE PLANS, SPECIFICATIONS AND DESIGN INTENT THEY CONVEY OR PROBLEMS WHICH ARISE FROM OTHERS' FAILURE TO OBTAIN AND/OR FOLLOW THE DESIGN PROFESSIONALS GUIDANCE WITH RESPECT TO ANY ERRORS, OMISSIONS, INCONSISTENCIES, AMBIGUITIES OR CONFLICTS WHICH ARE ALLEGED.

Always call 811 two full business days before you dig
Sunshine811.com
www.sunshine811.com

IRR. DESIGN
AN IRRIGATION DESIGN COMPANY
3215 ELLEN DR.
ORLANDO, FLORIDA 32806
PHONE (407) 859-5790
www.irrdesign.com
Jason McElroy
irrdesign@gmail.com

THIS SHEET NOT VALID FOR CONSTRUCTION UNLESS STAMPED APPROVED

No.	Date	Revision	By	No.	Date	Revision	By
1				4			
2				5			
3				6			
4				7			

cph
www.cphcorp.com
A Full Service A & E Firm
Architects Engineers Environmental Landscape Architects
M/E/P Planners Surveyors Traffic/Transportation
Offices In: • Florida • Puerto Rico • Connecticut • Maryland • Texas

Designed by:	JKW	Date: 9/11/2023
Drawn by:	RES	Scale: AS NOTED
Checked by:	JKW	
Approved by:	JKW	
Job No.	O6012	©2023

Oakland Ave.
City of Ocoee, Florida

Plans Prepared By:
CPH, Inc.
500 W. Fulton St. Sanford, FL 32771
Ph: 407.322.6841
Licenses:
Eng. C.O.A. No. 3215 Arch. Lic. No. AA26000926
Survey L.B. No. 7143 Landscp. Lic. No. LC0000298

Irrigation Plan
Sta. 25+00 to Sta. 31+00

Sheet No.
IR-2

Drawing name: J:\O6012\Landscape\DWG\Preliminary\Design\Plans\O6012-IRR.dwg Sep 11, 2023 - 9:14am rocrouch

IRRIGATION SCHEDULE

SYMBOL	MANUFACTURER/MODEL/DESCRIPTION	QTY
	Rain Bird PESB 1", 1-1/2", 2" Plastic Industrial Valves. Low Flow Operating Capability, Globe Configuration. With Scrubber Technology for Reliable Performance in Dirty Water Irrigation Applications.	7
	Rain Bird 33-DLRC 3/4" Brass Quick-Coupling Valve, with Corrosion-Resistant Stainless Steel Spring, Locking Thermoplastic Rubber Cover, Double Track Key Lug, and 2-Piece Body.	4
	Nibco T-113-K Class 125 bronze gate shut off valve with cross handle, same size as mainline pipe diameter at valve location. Size Range - 1/4in. - 3in.	1
BF	Watts 919QT 1-1/4" Backflow reduced pressure zone - Installation by a licensed Florida Plumbing Contractor in accordance with Manufacturer`s recommendations and all federal, state and local codes.	2
B	Rain Bird ESP8LXME-LXMM with (01) ESPLXMSM4 12 Station Capable Commercial Controller. Mounted on a Powder-Coated Metal Cabinet. Without flow sensing.	1
A	Rain Bird ESP8LXME-LXMM-LXMMPED 8 Station Capable Commercial Controller. Mounted on a Powder-Coated Metal Pedestal. Without Flow Sensing.	1
S	Rain Bird RSD-CEx Rain Sensing Device, conduit mount. With threaded adapter, extension wire.	1
M	Water Meter 1" 1` water meter requires 27 GPM @ 65 PSI. irrigation contractor shall be responsible to verify the sources ability to service the systems requirements at site before starting construction.	2
	Irrigation Lateral Line: PVC Class 200 SDR 21-NP Only lateral transition pipe sizes 1" and above are indicated on the plan, with all others being 3/4" in size.Install 12" below final grade.	5,292 l.f.
	Irrigation Mainline: PVC Class 200 SDR 21-NP Pipe sizes 3" inch or smaller shall have bell and socket joints. Pipe sizes larger then than 3" inch shall have snap connections w/ rubber gasket joints, thrust blocked. Install 18" below grade.	590.8 l.f.
	Pipe Sleeve: PVC Class 200 Typical pipe sleeve for irrigation pipe. Pipe sleeve size shall allow for irrigation piping and their related couplings to easily slide through sleeving material. Extend sleeves 18 inches beyond edges of paving or construction.	999.7 l.f.

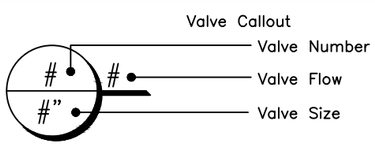

IRRIGATION SCHEDULE

SYMBOL	MANUFACTURER/MODEL/DESCRIPTION	QTY	PSI
E L R C S EST LCS RCS CST SST	Rain Bird 1806-U-SAM-PRS 15 Strip Series Turf Spray 6.0" Pop-Up Sprinkler with Co-Molded Wiper Seal. 1/2" NPT Female Threaded Inlet. With Seal-A-Matic Check Valve, and Pressure Regulating.	59	30
8 08HE-VAN 12 12HE-VAN 10 10HE-VAN 15 15HE-VAN	Rain Bird 1806-U-SAM-PRS HE-VAN Series Turf Spray 6.0" Pop-Up Sprinkler with Co-Molded Wiper Seal. 1/2" NPT Female Threaded Inlet. With Seal-A-Matic Check Valve, and Pressure Regulating.	25	30
1401 1402 1404 1408	Rain Bird 1800-1400 Flood Fixed flow rate 0.25 GPM - 2.0 GPM, full circle bubbler, 1/2in. FIPT.	112	20
SYMBOL	MANUFACTURER/MODEL/DESCRIPTION	QTY	
	Rain Bird XCZ-150-LCS High Flow Control Zone Kit, for Large Commercial Drip Zones. 1-1/2" PEB Globe Valve with single 1-1/2" Pressure Regulating (40psi) Quick-Check Basket Filters. Flow range: 15-62gpm.	9	
F	Rain Bird MDCFCAP Dripline Flush Valve cap in compression fitting coupler.	22	
	Area to Receive Dripline Rain Bird XFD-09-12 XFD On-Surface Pressure Compensating Landscape Dripline. 0.9 GPH emitters at 12" O.C. Dripline laterals spaced at 12" apart, with emitters offset for triangular pattern. UV Resistant. Specify XF insert fittings.	8,985 s.f.	

NOTES

- CONTRACTOR SHALL LOCATE ALL PROPERTY AND RIGHT OF WAY LINES BEFORE CONSTRUCTION BEGINS. THESE IRRIGATION PLANS ARE SCHEMATIC AND MAY BE EXAGGERATED. CONTRACTOR SHALL KEEP WITHIN ALL PROPERTY AND RIGHT OF WAY LINES DURING CONSTRUCTION. CONTRACTOR SHALL ADJUST ALL SPRAY HEADS SO AS NOT TO SPRAY ONTO IMPERVIOUS SURFACES.
- CONTRACTOR SHALL LOCATE AND VERIFY ALL EXISTING UTILITY DEPTHS AND COORDINATE IRRIGATION CONSTRUCTION WITH ALL EXISTING AND PROPOSED UTILITIES.
- ALL UNDERGROUND SLEEVES SHALL BE SCHEDULE 40 PVC AND SHALL BE TWICE THE DIAMETER OF ANY LINE IT HOUSES.
- CONTRACTOR TO PROTECT ALL EXISTING LANDSCAPING AND IRRIGATION
- ALL WIRE WILL BE COLOR-CODED DIRECT BURIAL UL/LF WIRE: COMMON (WHITE) #12-1, CONTROL WIRE (RED) #14-1
- IRRIGATION INSTALLATION CONTRACTOR SHALL INSTALL (2) SPARE CONTROL WIRES, COLOR-CODED YELLOW AND COMMON FROM CONTROLLER TO MIDPOINT OF MAINLINE, MOUNTED IN 10" ROUND VALVE BOX.

THESE PLANS ARE DIAGRAMMATIC OF THE WORK TO BE PERFORMED. ALL LANDSCAPED AREAS ARE TO RECEIVED 100% COVERAGE. INSTALL THIS IRRIGATION SYSTEM PER THE SITE CONDITIONS, AVAILABLE FLOW/PRESSURE AND MANUFACTURERS RECOMMENDATIONS. ADJUST ZONE FLOWS TO ACCOMMODATE THE AVAILABLE MAINLINE FLOWS AND PRESSURES.

THE DESIGN PROFESSIONAL DOES NOT ACCEPT ANY/ALL RESPONSIBILITY AND/OR LIABILITY FOR PROBLEMS WHICH ARISE FROM FAILURE TO FOLLOW THESE PLANS, SPECIFICATIONS AND DESIGN INTENT THEY CONVEY OR PROBLEMS WHICH ARISE FROM OTHERS' FAILURE TO OBTAIN AND/OR FOLLOW THE DESIGN PROFESSIONALS GUIDANCE WITH RESPECT TO ANY ERRORS, OMISSIONS, INCONSISTENCIES, AMBIGUITIES OR CONFLICTS WHICH ARE ALLEGED.

IRR. DESIGN
AN IRRIGATION DESIGN COMPANY
3215 ELLEN DR.
ORLANDO, FLORIDA 32806
PHONE (407) 859-5790
www.irrdesign.com
Jason McElroy
irrdesign@gmail.com

THIS SHEET NOT VALID FOR CONSTRUCTION UNLESS STAMPED APPROVED

No.	Date	Revision	By	No.	Date	Revision	By
1				4			
2				5			
3				6			

cph www.cphcorp.com
A Full Service A & E Firm
Architects M/E/P Engineers Planners Environmental Surveyors Landscape Architects Traffic/Transportation
Offices In: • Florida • Puerto Rico • Connecticut • Maryland • Texas
Designed by: JKW | Drawn by: RES | Checked by: JKW | Approved by: JKW | Job No. O6012
Date: 9/11/2023 | Scale: AS NOTED

©2023

Oakland Ave.
City of Ocoee, Florida

Plans Prepared By:
CPH, Inc.
500 W. Fulton St. Sanford, FL 32771
Ph: 407.322.6841
Licenses:
Eng. C.O.A. No. 3215 Arch. Lic. No. AA2600926
Survey L.B. No. 7143 Landscp. Lic. No. LC0000298

Irrigation Notes and Details

Sheet No.
IR-3

Drawing name: J:\O6012\Landscape\DWG\Preliminary\Design\Plans\O6012-IRR.dwg Sep 11, 2023 - 9:14am rcrouch

VALVE SCHEDULE - CONTROL SYSTEM "A"

NUMBER	MODEL	SIZE	TYPE	GPM	HEADS	PIPE 3/4"	PIPE 1"	PIPE 1 1/4"	WIRE	DESIGN PSI	FRICTION LOSS	PSI	PRECIP
A1	Rain Bird XCZ-150-LCS	1-1/2"	Turf Spray	11.43	14	254.1	27.2			30	1.65	34.7	1.61 in/h
A2	Rain Bird PESB	1"	Turf Spray	14.82	19	298.1	32.1			30	1.57	33.9	1.61 in/h
A3	Rain Bird PESB	1"	Bubbler	10.5	42	473.0				20	1.33	23.2	1.01 in/h
A4	Rain Bird XCZ-150-LCS	1-1/2"	Area for Dripline	19.88	359.2 l.f.	76.8		5.8		30	1.03	34.0	1.44 in/h
A5	Rain Bird XCZ-150-LCS	1-1/2"	Area for Dripline	16.56	1,103 l.f.	87.2	11.2			30	2.1	35.1	1.44 in/h

WATERING SCHEDULE - CONTROL SYSTEM "A"

NUMBER	MODEL	TYPE	PRECIP	SUN	MON	TUE	WED	THU	FRI	SAT	IN./WEEK	MIN./WEEK	GAL./WEEK	GAL./DAY
A1	Rain Bird XCZ-150-LCS	Turf Spray	1.61 in/h			19 min			19 min		1	38	434	217
A2	Rain Bird PESB	Turf Spray	1.61 in/h			19 min			19 min		1	38	563	282
A3	Rain Bird PESB	Bubbler	1.01 in/h			30 min			30 min		1	60	630	315
A4	Rain Bird XCZ-150-LCS	Area for Dripline	1.44 in/h			21 min			21 min		1	42	835	417
A5	Rain Bird XCZ-150-LCS	Area for Dripline	1.44 in/h			21 min			21 min		1	42	696	348
		TOTALS:				110			110			220	3,158	1,579

VALVE SCHEDULE - CONTROL SYSTEM "B"

NUMBER	MODEL	SIZE	TYPE	GPM	HEADS	PIPE 3/4"	PIPE 1"	PIPE 1 1/4"	PIPE 1 1/2"	WIRE	DESIGN PSI	FRICTION LOSS	PSI	PRECIP
B1	Rain Bird XCZ-150-LCS	1-1/2"	Area for Dripline	16.5	1,099 l.f.	154.5	37.8	13.2			30	2.84	35.8	1.45 in/h
B2	Rain Bird PESB	1"	Bubbler	8.5	34	703.1					20	0.58	22.4	0.99 in/h
B3	Rain Bird XCZ-150-LCS	1-1/2"	Area for Dripline	23.9	1,593 l.f.	135.8	144.2	82.0	5.5		30	2.76	35.8	1.45 in/h
B4	Rain Bird PESB	1"	Turf Spray	9.41	9	106.1					30	1.48	33.3	1.77 in/h
B5	Rain Bird XCZ-150-LCS	1-1/2"	Area for Dripline	17.01	1,134 l.f.	224.1	13.9				30	2.22	35.2	1.44 in/h
B6	Rain Bird XCZ-150-LCS	1-1/2"	Area for Dripline	16.22	1,081 l.f.	265.0	12.8				30	1.27	34.3	1.44 in/h
B7	Rain Bird PESB	1"	Turf Spray	20.31	21	318.1	57.6	8.2			30	2.27	35.3	1.64 in/h
B8	Rain Bird XCZ-150-LCS	1-1/2"	Area for Dripline	24.24	1,617 l.f.	125.6	295.0	6.9			30	2.85	35.8	1.44 in/h
B9	Rain Bird PESB	1"	Bubbler	9	36	797.4					20	0.72	22.5	0.99 in/h
B10	Rain Bird XCZ-150-LCS	1-1/2"	Area for Dripline	14.99	999.0 l.f.	198.3	11.7				30	2.67	35.7	1.44 in/h
B11	Rain Bird PESB	1"	Turf Spray	13.5	21	204.5		99.7			30	1.46	33.6	1.83 in/h

WATERING SCHEDULE - CONTROL SYSTEM "B"

NUMBER	MODEL	TYPE	PRECIP	SUN	MON	TUE	WED	THU	FRI	SAT	IN./WEEK	MIN./WEEK	GAL./WEEK	GAL./DAY
B1	Rain Bird XCZ-150-LCS	Area for Dripline	1.45 in/h			21 min			21 min		1	42	693	347
B2	Rain Bird PESB	Bubbler	0.99 in/h			31 min			31 min		1	61	519	259
B3	Rain Bird XCZ-150-LCS	Area for Dripline	1.45 in/h			21 min			21 min		1	42	1,004	502
B4	Rain Bird PESB	Turf Spray	1.77 in/h			17 min			17 min		1	34	320	160
B5	Rain Bird XCZ-150-LCS	Area for Dripline	1.44 in/h			21 min			21 min		1	42	714	357
B6	Rain Bird XCZ-150-LCS	Area for Dripline	1.44 in/h			21 min			21 min		1	42	681	341
B7	Rain Bird PESB	Turf Spray	1.64 in/h			19 min			19 min		1	37	751	376
B8	Rain Bird XCZ-150-LCS	Area for Dripline	1.44 in/h			21 min			21 min		1	42	1,018	509
B9	Rain Bird PESB	Bubbler	0.99 in/h			31 min			31 min		1	61	549	275
B10	Rain Bird XCZ-150-LCS	Area for Dripline	1.44 in/h			21 min			21 min		1	42	629	315
B11	Rain Bird PESB	Turf Spray	1.83 in/h			17 min			17 min		1	33	445	223
		TOTALS:				241			241			478	7,324	3,662

THIS SHEET NOT VALID FOR CONSTRUCTION UNLESS STAMPED APPROVED

IRR. DESIGN
AN IRRIGATION DESIGN COMPANY
3215 ELLEN DR.
ORLANDO, FLORIDA 32806
PHONE (407) 859-5790
www.irrdesign.com
Jason McElroy
irrdesign@gmail.com

Always call 811 two full business days before you dig
Sunshine811.com
www.sunshine811.com

No.	Date	Revision	By	No.	Date	Revision	By
1				1			
2				2			
3				3			
4				4			

cph www.cphcorp.com
A Full Service A & E Firm
Architects M/E/P Engineers Planners Environmental Surveyors Landscape Architects Traffic/Transportation
Offices In: • Florida • Puerto Rico • Connecticut • Maryland • Texas

Designed by:	JKW	Date: 9/11/2023
Drawn by:	RES	Scale: AS NOTED
Checked by:	JKW	
Approved by:	JKW	
Job No.	O6012	©2023

Plans Prepared By: CPH, Inc.
500 W. Fulton St. Sanford, FL 32771
Ph: 407.322.6841
Licenses: Eng. C.O.A. No. 3215 Arch. Lic. No. AA2600926 Survey L.B. No. 7143 Landscp. Lic. No. LC0000298

Oakland Ave.
City of Ocoee, Florida

Irrigation Schedules

Sheet No. IR-4

Drawing name: J:\O6012\Landscape\DWG\Preliminary\Design\Plans\O6012-IRR.dwg Sep 11, 2023 - 9:14am rocouch

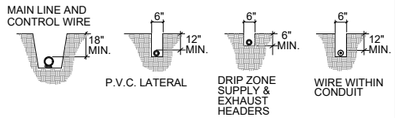

DETAIL NOTES:

1. ALL P.V.C. PIPING SHALL BE SNAKED IN TRENCHES.
2. ALL WIRING TO BE INSTALLED PER LOCAL CODES.
3. ALL WIRING TO BE BUNDLED AND TAPED AT 10' INTERVALS.
4. ALL MAIN SUPPLY LINES TO BE INSTALLED AS PER MANUFACTURER'S SPECIFICATIONS.
5. PROVIDE PIPE AND WIRE SLEEVES UNDER ALL PAVED SURFACES. WIRE SHALL BE WITHIN SEPARATE 2" ELECTRICAL CHASE.

TRENCHING DETAIL

TREE IRRIGATION AFTER PLANTING DURING ESTABLISHMENT

SIZE OF NURSERY STOCK	IRRIGATION SCHEDULE FOR VITALITY
LESS THAN 2" CALIPER	DAILY FOR TWO WEEKS, EVERY OTHER DAY FOR TWO MONTHS, WEEKLY UNTIL ESTABLISHED
2"-4" CALIPER	DAILY FOR ONE MONTH, EVERY OTHER DAY FOR THREE MONTHS, WEEKLY UNTIL ESTABLISHED.
GREATER THAN 4" CALIPER	DAILY FOR SIX WEEKS, EVERY OTHER DAY FOR FIVE MONTHS, WEEKLY UNTIL ESTABLISHED

1. AT EACH IRRIGATION, APPLY TWO TO THREE GALLONS PER INCH TRUNK CALIPER AT THE ROOT BALL SURFACE. APPLY IT IN A MANNER SO ALL WATER SOAKS THE ENTIRE ROOT BALL. DO NOT WATER IF THE ROOT BALL IS WET/SATURATED ON THE IRRIGATION DAY

2. DELETE DAILY IRRIGATION WHEN PLANTING IN WINTER. ESTABLISHMENT TAKES THREE (HARDINESS ZONE 10-11) TO FOUR (HARDINESS ZONE 8-9) MONTHS PER INCH TRUNK CALIPER. NEVER APPLY IRRIGATION IF THE SOIL IS SATURATED.

DRIP TUBING NOTES

1. INSTALL DRIP TUBING AT GRADE AND COVER WITH MULCH. TYPICAL SPACING FOR DRIP TUBING IS 12" TO 18" ON CENTER. SPACING TO BE DETERMINED BY PLANT LAYOUT. REFER TO LANDSCAPE PLAN. ANCHOR TUBING EVERY 10' WITH 12" LONG PLASTIC TUBING STAKES. INSTALL FLUSH VALVE ASSEMBLIES AT ALL TUBING "DEAD ENDS". INSTALL AIR/VACUUM RELIEF VALVES AT "HIGH POINTS" OF EVERY SECTION.
2. GRID LAYOUT SHALL BE USED ON THIS PROJECT. USE CENTER GRID LAYOUT WHERE POSSIBLE.
3. WHEN SLEEVING DRIPLINE, USE BLANK DRIPLINE IN SLEEVE. SLEEVE SHALL BE 2X DRIPLINE DIAMETER. NO EMITTER DRIPLINE SHALL BE PLACED IN SLEEVE.
4. THE LENGTH OF ANY DRIPLINE LATERAL SHALL NOT BE LONGER THAN:
   12" EMITTERS @ 0.9 GPH
   a) @ 15 PSI = 65 FEET
   b) @ 25 PSI = 194 FEET
   c) @ 35 PSI = 244 FEET
   d) @ 45 PSI = 280 FEET
   LATERAL DISTANCE DOUBLED WHEN CENTER FEED LAYOUT USED (SEE CENTER FEED LAYOUT DETAIL.
5. MANUAL FLUSH VALVE SHALL BE USED & PLACED WITH A 6" X 6" SUMP. VALVES SHALL BE OPENED EVERY WATERING DAY FOR 2 WEEKS AND THEN A MINIMUM OF 2 TIMES A YEAR TO CLEAR DRIPLINE OF DEBRIS.
6. AIR/VACUUM RELIEF SHALL BE INSTALLED WHEN THE CHANGE IN SLOPE OCCURS 3% OR GREATER.
7. STAPLES SHALL BE USED AT 5' O.C. AND 2 STAPLES 'X'ED OVER EACH OTHER WITH ANY CHANGE IN DIRECTION, ELBOWS, OR CROSSES.
8. SUPPLY, EXHAUST HEADERS AND DRIPLINE SHALL BE PLACED 2"- 4" FROM PLANTS AND PAVEMENT EDGES.
9. BLANK DRIPLINE SHALL BE USED FOR ALL SUPPLY AND EXHAUST HEADERS, UNLESS OTHERWISE NOTED ON PLANS.
10. PRIOR TO COVERING DRIPLINE, DRIPLINE CIRCUIT WILL BE PRESSURIZED AND TESTED FOR PROPER OPERATION.
11. DRIP LINE LATERALS SHALL BE LAID IN THE LONGEST RUN, WHETHER IT BE THE WIDTH OR LENGTH OF THE ZONE.

IRRIGATION SYSTEM WATER RESTRICTION

- Outdoor irrigation is limited to one day a week during Eastern Standard Time (from the first Sunday in November until the second Sunday in March) and two days a week during Daylight Saving Time (from the second Sunday in March until the first Sunday in November).
- Water only if necessary and not between 10:00 a.m. and 4:00 p.m.
- Water for no more than one hour per zone.

Addresses ending in:	Authorized Watering Days (DST):	Authorized Watering Days (EST):
EVEN numbers: 0, 2, 4, 6, 8	Thursday and/or Sunday	Sunday
ODD numbers: 1, 3, 5, 7, 9	Wednesday and/or Saturday	Saturday
Non Residential properties	Tuesday and/or Friday	Tuesday

IRRIGATION SYSTEM PERFORMANCE NOTES

1. IRRIGATION SYSTEM IS DESIGNED TO OPERATE OFF A POTABLE WATER METER PROVIDING A MINIMUM FLOW OF 27 GPM AND A MINIMUM PRESSURE OF 65 PSI.

   CONTRACTOR MUST CONTACT THE LANDSCAPE ARCHITECT PRIOR TO THE COMMENCEMENT OF ANY CONSTRUCTION IF THE AVAILABLE FLOW AND PRESSURE DEVIATES MORE THEN 5% OR WILL AFFECT THE PERFORMANCE OF THE SYSTEM.

   MINIMUM PRESSURE REQUIREMENTS - 65 PSI AT THE POINT OF CONNECTION
   A. 45 PSI AT THE BASE OF THE POP-UP ROTOR/ROTATOR HEADS
   B. 30 PSI AT THE BASE OF THE POP-UP SPRAY HEADS

2. HEAD LAYOUT IS BASED ON BASE INFORMATION PROVIDED. HEADS SHALL BE ADJUSTED TO ACCOMMODATE FIELD VARIATIONS WHILE MAINTAINING 100% COVERAGE AND MINIMIZING OVER-SPRAY ONTO PAVED AREAS AND BUILDINGS.

3. ½" PIPE SHALL NOT BE USED FOR LATERAL PIPING

SLEEVING NOTES

1. THE LOCATIONS OF SLEEVES, AS SHOWN ON THIS PLAN, ARE SCHEMATIC. THE CONTRACTOR SHALL MAKE ANY ADJUSTMENTS NECESSARY TO ACCOMMODATE EXISTING VEGETATION, UTILITIES, OR OTHER MAJOR CONSTRUCTION.
2. ANY DAMAGE TO EXISTING UTILITIES, STRUCTURES, OR OTHER CONSTRUCTION RESULTING FROM INSTALLATION OF SLEEVES IS THE RESPONSIBILITY OF THE CONTRACTOR.
3. WHERE A PIPE JOINT BETWEEN SECTIONS IS NECESSARY, THE INSIDE DIAMETER OF THE PIPE SHALL NOT BE SIGNIFICANTLY REDUCED.
4. PVC SLEEVES SHALL BE INSTALLED AT A DEPTH OF AT LEAST 18" BELOW PAVEMENT SURFACE, AND IS NOT TO EXCEED THE DETAILED DEPTH REQUIREMENTS BY 6". END OF THE SHALL EXTEND 12" BEYOND CURB OR PAVEMENT EDGE.
5. BACKFILL MATERIAL PLACED AROUND THE SLEEVES SHALL BE FREE OF ROCKS OR OTHER FOREIGN MATTER THAT MAY CAUSE DAMAGE TO THE PIPE.
6. THE SLEEVING CONTRACTOR SHALL INSTALL A PVC STUB THAT IS AT LEAST 18" ABOVE GRADE AT EACH END OF THE SLEEVE TO MARK ITS EXACT LOCATION (SEE SLEEVING DETAIL)
7. ONCE THE SLEEVING IS INSTALLED, THE CONTRACTOR SHALL INSTALL A TEMPORARY CAP ON EACH END OF THE PIPE ACCORDING TO THE DETAIL TO PREVENT SOIL OR OTHER DEBRIS FROM ENTERING THE PIPE.
8. ALL MODIFICATIONS OF THIS PLAN ARE SUBJECT TO THE APPROVAL OF THE L.A.
9. THE SLEEVING CONTRACTOR SHALL SUPPLY THE LANDSCAPE ARCHITECT WITH AN "AS-BUILT" PLAN OF THE LOCATION OF ALL SLEEVES PRIOR TO ACCEPTANCE OF THE WORK.
10. SLEEVE SIZES ARE AS NOTED ON THE PLAN.
11. THERE SHALL BE NO TURNS OR BENDS IN THE SLEEVES.
12. THE GENERAL CONTRACTOR WILL BE RESPONSIBLE FOR EXPOSING HORIZONTAL ENDS
13. BELOW FINISHED GRADE IN ALL AREAS WHERE SLEEVING IS NOT INSTALLED AS DETAILED.
14. IRRIGATION SLEEVES ARE TO BE CLASS 200 PIPE FOR 6" AND LARGER AND SCHEDULE 40 PVC FOR 4" AND SMALLER.

THE IRRIGATION SYSTEM IS TO BE CONVERTED TO RECLAIMED WATER ONCE THE RECLAIMED WATER SERVICE LINE IS AVAILABLE. THE IRRIGATION CONTRACTOR IS TO INSTALL ALL BELOW-GROUND EQUIPMENT TO THE LOCAL CODES PERTAINING TO THE USE OF RECLAIMED FOR IRRIGATION. ONCE THE RECLAIMED WATER SERVICE BECOMES AVAILABLE THE SYSTEM SHALL MEET ALL RE-USE WATER CODES.

GENERAL IRRIGATION NOTES

1. ALL MAINLINES TO HAVE A MINIMUM OF 18" OF COVER. (CLASS 200 PVC PIPE).
2. ALL LATERAL AND SUB-MAIN PIPE TO HAVE A MINIMUM OF 12" OF COVER (CLASS 200 PVC PIPE).
3. NO ROCKS, BOULDER, OR OTHER EXTRANEOUS MATERIALS TO BE USED IN BACKFILLING OF TRENCH.
4. ALL PIPE TO BE INSTALLED AS PER MANUFACTURERS' SPECIFICATIONS.
5. ALL THREADED JOINTS TO BE COATED WITH TEFLON TAPE OR LIQUID TEFLON.
6. ALL LINES TO BE THOROUGHLY FLUSHED BEFORE INSTALLATION OF SPRINKLER HEADS.
7. SPRINKLER AND RELATED EQUIPMENT TO BE INSTALLED AS PER DETAILS.
8. ALL ELECTRICAL JOINTS TO BE MADE USING WATERPROOF CONNECTIONS AS SHOWN ON DETAILS.
9. ALL EQUIPMENT NOT SPECIFIED IN THE LEGEND SHALL BE DETERMINED AND FURNISHED BY THE CONTRACTOR.
10. NO ELECTRICAL CONNECTIONS SHALL BE MADE IN THE FIELD EXCEPT AT A VALVE CONTROL BOX OR ANOTHER VALVE BOX SPECIFICALLY FOR CONNECTIONS.
11. ANY DISCREPANCY BETWEEN THIS SHEET AND OTHERS IN THIS SET MUST BE REFERRED TO THE IRRIGATION CONSULTANT BY THE CONTRACTOR FOR CLARIFICATION BEFORE PRECEDING WITH THE WORK.
12. ALL 24 VOLT WIRE SHALL BE #12 UF/UL FOR COMMON WIRE, AND #14 UF/UL FOR CONTROL WIRES, DIRECT BURIAL, SOLID COPPER.
13. CONTRACTOR TO BE RESPONSIBLE FOR PROPER COVERAGE OF AREAS TO BE WATERED. i.e ADJUST HEADS WITH INSUFFICIENT COVERAGE DUE TO BLOCKAGE BY EXISTING OR PROPOSED SITE FEATURES.
14. CONTRACTOR TO REFER TO LANDSCAPE PLAN TO KEEP SPRINKLER EQUIPMENT AND ACCESSORY MATERIAL FROM INTERFERING WITH PROPER PLANTING, i.e VERIFY ROOT BALL SIZE FOR PLANTING
15. CONTRACTOR SHALL PROVIDE EXPANSION COILS AT EACH WIRE CONNECTION IN A VALVE BOX (WRAP AROUND 3/4" PIPE 12 TIMES.
16. SPRINKLERS IN LOW-LYING AREAS SHALL HAVE CHECK VALVES.
17. ALL SPRINKLERS TO BE MOUNTED ON FLEX PIPE - REFER TO DETAILS.
18. PROVIDE DRIP LINE EMITTER TUBING SYSTEM FOR PLANTING AREAS AS SHOWN ON DRAWINGS.
19. INSTALL DRIP LINE TUBING AND NON-PRESSURE LATERAL LEAD LINE PIPING IN LANDSCAPE AREAS AND ADJACENT TO SELECTED PLANT MATERIAL AS SHOWN IN DETAILS.
20. CONTRACTOR SHALL UTILIZE VALVE I.D. TAGS ON ALL REMOTE CONTROL VALVES.
21. 24 VOLT WIRE SHALL BE COLOR CODE; COMMON-WHITE, CONTROL-RED.
22. CONTRACTOR SHALL INSTALL MANUFACTURERS' RECOMMENDED GROUNDING EQUIPMENT FOR POWER SUPPLY AND VALVE OUTPUT WITH (2) 5/8" COPPER CLAD GROUND RODS.
23. CONTRACTOR SHALL INSTALL MANUFACTURERS' RECOMMENDATION ON FAULT GROUND AND LIGHTENING PROTECTION.
24. CONTROLLER GROUNDING MUST BE PER ASIC REQUIREMENTS.
25. ALL MATERIAL TO BE SUPPLIED BY CONTRACTOR TO OWNER:
    A. TWO WRENCHES FOR DISASSEMBLING AND ADJUSTING EACH TYPE OF SPRINKLER HEAD AND VALVE SUPPLIED.
    B. TWO KEYS FOR EACH OF THE AUTOMATIC CONTROLLERS.
    C. TWO QUICK COUPLER KEYS WITH MATCHING HOSE SWIVELS.
26. SYSTEM IS DIAGRAMMATIC TO IMPROVE CLARITY. ALL MAINLINE PIPING, ELECTRIC VALVES AND WIRING ARE TO BE INSTALLED IN LANDSCAPED AREAS AND REFERENCE THE LANDSCAPE PLAN PRIOR TO THE INSTALLATION OF PIPING TO AVOID CONTACT WITH PLANT MATERIALS EXISTING OR NEW..
27. CONTRACTOR SHALL INSTALL SPRINKLER EQUIPMENT 12" FROM FOUNDATIONS, ALSO INSTALL SPRINKLERS 4" FROM CURBS OR WALKS.
28. PRIOR TO BID IRRIGATION CONTRACTOR SHALL VERIFY RIGHT-OF-WAY AND BACKFLOW REQUIREMENTS NO LATER THAN FIVE DAYS BEFORE BID SUBMITTALS. CONTRACTOR SHALL NOTIFY CONSULTANT OF ANY CHANGES FROM PLANS OR SPECIFICATIONS.
29. IRRIGATION CONTRACTOR SHALL PROVIDE THE OWNER AND LANDSCAPE ARCHITECT WITH A REPRODUCIBLE CROSS MEASURED AS-BUILT DRAWING OF THE INSTALLED IRRIGATION SYSTEM IN AUTOCAD 2010 FORMAT BEFORE FINAL ACCEPTANCE.
30. A 1-YEAR WARRANTY PERIOD SHALL BE PROVIDED FOR SYSTEM AFTER SUBSTANTIAL COMPLETION IS ACCEPTED. START UP AND ADJUSTING OF SYSTEM IN SPRING TIME SHALL BE INCLUDED IN WARRANTY.
31. PRIOR TO BID, CONTRACTOR SHALL VERIFY THAT ALL MATERIAL, INSTALLATION PARAMETERS AND OPERATIONS CONFORM TO ALL APPLICABLE CODES AND ORDINANCES NO LATER THAN FIVE DAYS BEFORE BID SUBMITTALS. CONTRACTOR SHALL NOTIFY IRRIGATION CONSULTANT/DESIGNER OF ANY CHANGES REQUIRED DUE TO CURRENT CODE OR ORDINANCE DISCREPANCIES. IF CONTRACTOR DOES NOT COMPLY TO THIS NOTIFICATION, THE CONTRACTOR SHALL BE RESPONSIBLE FOR ALL NECESSARY INSTALLATION CHANGE AND REDESIGN COSTS FOR NON-COMPLIANCE.
32. UNLESS OTHERWISE NOTED, THE CONTRACTOR MUST COMPLETE TWP PRESSURE TESTS OF THE IRRIGATION SYSTEM MAINLINE(BOTH TO SHOW NO DROP IN PRESSURE DURING DURATION OF THE TEST).
    A. 2-HOUR PRESSURE TEST AT 1.5 TIMES THE SYSTEM STATIC PRESSURE
    B. 24-HOUR PRESSURE TEST AT THE SYSTEM STATIC PRESSURE
34. IRRIGATION INSTALLATION CONTRACTOR SHALL PROVIDE THE OWNER WITH A COLOR-CODED ZONE DIAGRAM PLAN, 8-1/2"X11" LAMINATED SHEET(S) TO IDENTIFY CONTROLLER STATION TO THE CONTROL VALVE NUMBER FOR EACH CONTROLLER. CHART IS TO BE LOCATED IN AN ADHESIVE POUCH ATTACHED TO THE INSIDE OF CONTROLLER(S).
35. THE CONTROLLER(S) SHALL SCHEDULE PROGRAM "A" TO A REGULAR RUN-TIME SETTINGS FOR AFTER THE ESTABLISHMENT PERIOD OF THE PLANT MATERIAL. PROGRAM "B" SHALL BE USED DURING THE ESTABLISHMENT PERIOD AND TURNED OFF AFTER THE 30-60 DAYS OF PLANT INSTALLATION.
18. THE IRRIGATION CONTRACTOR WILL READ ALL SPECIFICATIONS AND REVIEW ALL DETAILS AND EXAMINE THESE PLANS CAREFULLY PRIOR TO BIDDING THIS PROJECT. FAILURE TO READ THIS INFORMATION IS NOT AN ACCEPTABLE REASON IF THE JOB IS UNDERBID.
19. THE PLAN MAY NOT INCLUDE ALL MATERIALS. THIS DOESN'T RELIEVE THE CONTRACTOR FROM BEING RESPONSIBLE TO PROVIDE A COMPLETE SYSTEM IN PERFECT WORKING ORDER.

IRR. DESIGN
AN IRRIGATION DESIGN COMPANY
3215 ELLEN DR.
ORLANDO, FLORIDA 32806
PHONE (407) 859-5790
www.irrdesign.com
Jason McElroy
irrdesign@gmail.com

Always call 811 two full business days before you dig
Sunshine811.com
www.sunshine811.com

THIS SHEET NOT VALID FOR CONSTRUCTION UNLESS STAMPED APPROVED

No.	Date	Revision	By	No.	Date	Revision	By
1				5			
2				6			
3				7			
4				8			

cph
www.cphcorp.com
A Full Service A & E Firm
Architects M/E/P
Engineers Planners
Environmental Surveyors
Landscape Architects Traffic/Transportation
Offices In: • Florida • Puerto Rico • Connecticut • Maryland • Texas

Designed by:	JKW	Date: 9/11/2023	
Drawn by:	RES	Scale: AS NOTED	
Checked by:	JKW		
Approved by:	JKW		
Job No.	O6012	©2023	

Oakland Ave.
City of Ocoee, Florida

Plans Prepared By:
CPH, Inc.
500 W. Fulton St. Sanford, FL 32771
Ph: 407.322.6841
Licenses:
Eng. C.O.A. No. 3215 Arch. Lic. No. AA26600926
Survey L.B. No. 7143 Landscp. Lic. No. LC0000298

Irrigation Notes

Sheet No.
IR-5

Drawing name: J:\O6012\Landscape\DWG\Preliminary\Design\Plans\O6012-IRR.dwg Sep 11, 2023 - 9:14am rocrouch

SPRINKLERS IN LOW LYING AREAS SHALL HAVE CHECK VALVES.

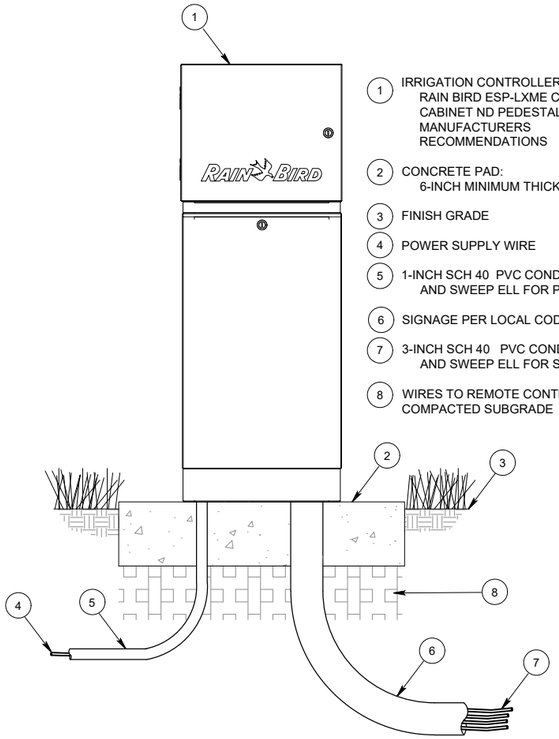

1. IRRIGATION CONTROLLER" RAIN BIRD ESP-LXME CONTROLLER, CABINET ND PEDESTAL PER MANUFACTURERS RECOMMENDATIONS
2. CONCRETE PAD: 6-INCH MINIMUM THICKNESS
3. FINISH GRADE
4. POWER SUPPLY WIRE
5. 1-INCH SCH 40 PVC CONDUIT, FITTINGS AND SWEEP ELL FOR POWER SUPPLY
6. SIGNAGE PER LOCAL CODES
7. 3-INCH SCH 40 PVC CONDUIT, FITTINGS AND SWEEP ELL FOR STATION WIRES
8. WIRES TO REMOTE CONTROL VALVES COMPACTED SUBGRADE

ESP-LXMECONTROLLER IN METAL PEDESTAL

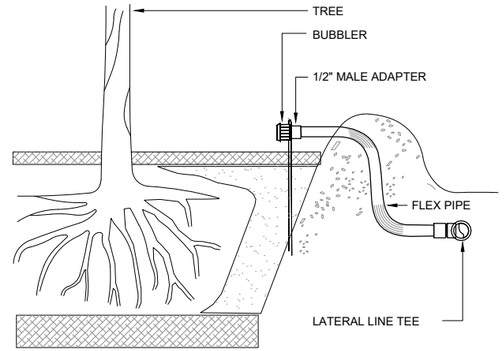

TREE BUBBLER DETAIL

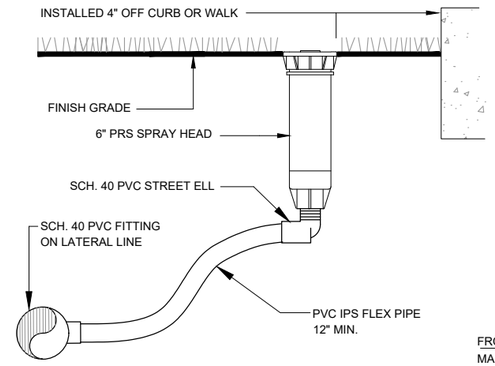

6" POP-UP SPRAY HEAD DETAIL

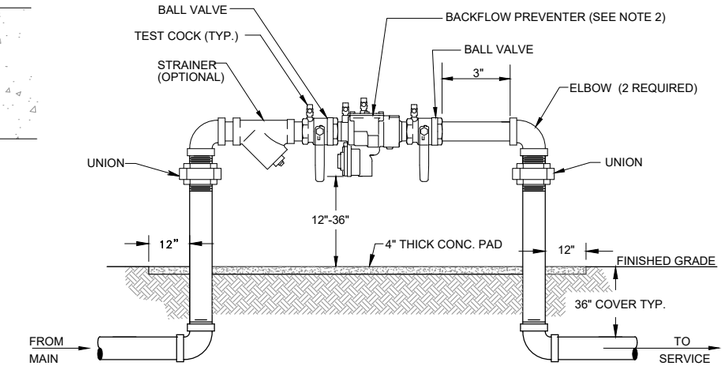

NOTES:
1. ALL PIPE AND FITTINGS 2" AND SMALLER SHALL BE THREADED SCHEDULE 40 GALVANIZED STEEL OR BRASS.
2. ALL BACKFLOW PREVENTER DEVICES SHALL BE APPROVED BY THE CITY/COUNTY BACKFLOW PREVENTER TECHNICIAN. ALL REDUCED PRESSURE BACKFLOW DEVICES SHALL BE USC APPROVED.
3. CONCRETE PAD IS REQUIRED FOR ALL INSTALLATIONS 1-1/2" OR LARGER.

REDUCED PRESSURE BACKFLOW PREVENTER

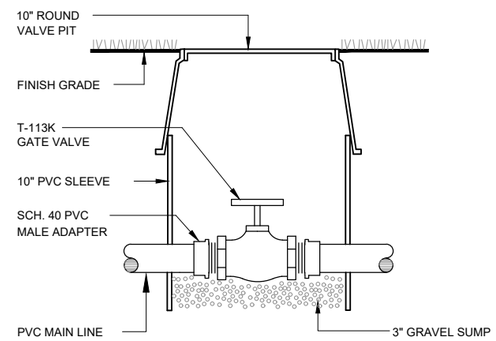

ISOLATION GATE VALVE

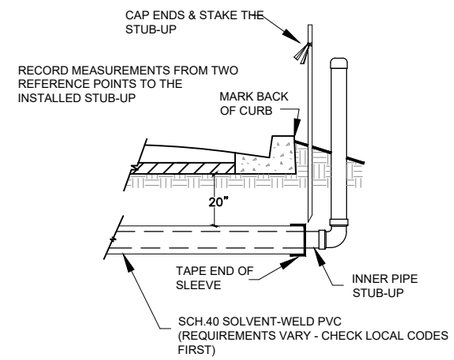

ROUGH IN SLEEVING DETAIL

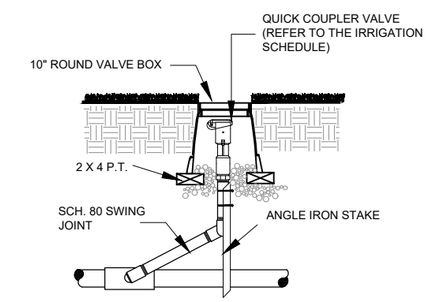

QUICK COUPLER TYPICAL DETAIL

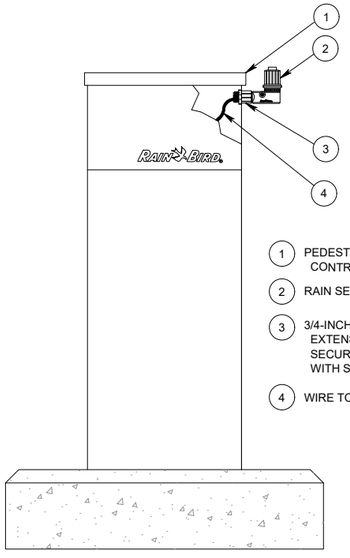

1. PEDESTAL MOUNTED IRRIGATION CONTROLLER ENCLOSURE
2. RAIN SENSOR: RAIN BIRD RSD-CEx
3. 3/4-INCH SCH 40 RISER EXTENSION (FIPT X MIPT) SECURED TO ENCLOSURE WITH SCH 40 NUT
4. WIRE TO IRRIGATION CONTROLLER

RAIN SENSOR - RSD-CEx PEDESTAL MOUNT

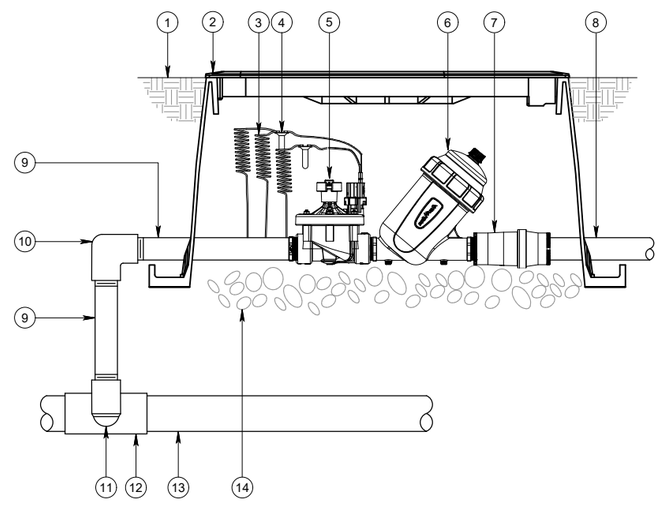

1. FINISH GRADE/TOP OF MULCH
2. JUMBO VALVE BOX WITH COVER: RAIN BIRD VBJMBL
3. 30-INCH LINEAR LENGTH OF WIRE, COILED
4. WATERPROOF CONNECTION: RAIN BIRD DB SERIES
5. 1 1/2" PEB VALVE (INCLUDED IN XCZ-150-LCS KIT)
6. 1 1/2" FILTER - RAIN BIRD LARGE CAPACITY SCREEN FILTER (INCLUDED IN XCZ-150-LCS KIT)
7. 1 1/2" HIGH FLOW PRESSURE REGULATOR (INCLUDED IN XCZ-150-LCS KIT)
8. LATERAL PIPE
9. PVC SCH 80 NIPPLE 1 1/2"
10. PVC SCH 40 ELBOW
11. PVC SCH 80 NIPPLE (2" LENGTH, HIDDEN) AND PVC 40 ELBOW
12. PVC SCH 40 TEE OR ELBOW
13. MAINLINE PIPE
14. 3" MINIMUM DEPTH OF 3/4" WASHED GRAVEL

RAIN BIRD XCZ-150-LCS 1.5" COMMERCIAL CONTROL ZONE KIT IN JUMBO VALVE BOX

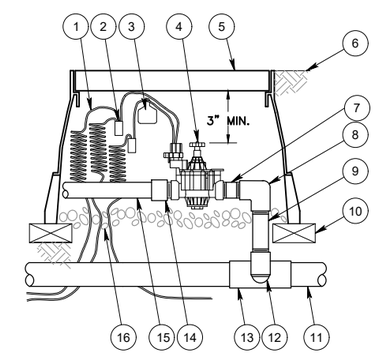

1. 30" LINEAR LENGTH OF WIRE, COILED
2. WATERPROOF CONNECTION RAIN BIRD SPLICE-1 (1 OF 2)
3. ID TAG: RAIN BIRD VID SERIES
4. REMOTE CONTROL VALVE: RAIN BIRD PESB
5. VALVE BOX WITH COVER RAIN BIRD VB-STDP
6. FINISH GRADE/TOP OF MULCH
7. PVC SCH 80 NIPPLE (CLOSE)
8. PVC SCH 40 ELL
9. PVC SCH 80 NIPPLE (LENGTH AS REQUIRED)
10. BRICK (1 OF 4)
11. PVC MAINLINE PIPE
12. SCH 80 NIPPLE (2" LENGTH, HIDDEN) AND SCH 40 ELL
13. PVC SCH 40 TEE OR ELL
14. PVC SCH 40 MALE ADAPTER
15. PVC LATERAL LINE
16. 3" MINIMUM DEPTH OF $\frac{3}{4}$" WASHED GRAVEL

ELECTRIC REMOTE CONTROL VALVE - PESB SERIES

THIS SHEET NOT VALID FOR CONSTRUCTION UNLESS STAMPED APPROVED

No.	Date	Revision	By	No.	Date	Revision	By
1				1			
2				2			
3				3			
4				4			

cph — www.cphcorp.com

A Full Service A & E Firm: Architects, Engineers, Environmental, Landscape Architects, M/E/P, Planners, Surveyors, Traffic/Transportation

Offices In: • Florida • Puerto Rico • Connecticut • Maryland • Texas

Designed by:	JKW	Date: 9/11/2023	
Drawn by:	RES	Scale: AS NOTED	
Checked by:	JKW		
Approved by:	JKW		
Job No.	O6012	©2023	

Oakland Ave.
City of Ocoee, Florida

Plans Prepared By: CPH, Inc.
500 W. Fulton St. Sanford, FL 32771
Ph: 407.322.6841
Licenses:
Eng. C.O.A. No. 3215 Arch. Lic. No. AA26009 26
Survey L.B. No. 7143 Landscp. Lic. No. LC0000298

Irrigation Details

Sheet No. *IR-6*

Drawing name: J:\O6012\Landscape\DWG\Preliminary Design\Plans\O6012-IRR.dwg Sep 11, 2023 - 9:14am nonouch

LEGEND

- RIGHT OF WAY LINE
- LIMITED ACCESS RIGHT OF WAY LINE
- EASEMENT LINE
- PARCEL / PROPERTY LINE
- WETLAND BOUNDARY LINE
- EXISTING FENCE
- EXISTING CABLE TV
- EXISTING FIBER OPTIC CABLE
- EXISTING BURIED ELECTRIC
- EXISTING OVER FORCE MAIN
- EXISTING GAS
- EXISTING IRRIGATION
- EXISTING OVER HEAD UTILITY
- EXISTING RECLAIMED WATER MAIN
- EXISTING SANITARY SEWER
- EXISTING TELEPHONE
- EXISTING WATER MAIN

- REMOVE AND REPLACE CONC SIDEWALK AND DRIVEWAY
- ASPHALT ROADWAY RESTORATION
- MILL AND RESURFACE ASPHALT PAVEMENT
- EXISTING PIPE TO BE REMOVED
- EXISTING PIPE TO BE ABANDONED
- TH-# SOFT DIG LOCATION MARKER AND IDENTIFICATION TAG
- SOIL BORING LOCATION MARKER

- TAPPING SLEEVE AND VALVE
- TEE
- LINE STOP ASSEMBLY
- GATE VALVE
- SLEEVE
- CAP
- AIR RELEASE VALVE ASSEMBLY
- HDPE / DI MJ ADAPTER
- # UNKNOWN ELEVATION OF EXISTING UTILITY AS INDICATED ON PROFILE SHEETS

UTILITY PIPE DESIGNATION

SIZE — MATL — TYPE — QUALITY LEVEL

8" CLAY SAN (C)

NOTE: THIS DRAWING WAS PREPARED IN CONFORMANCE WITH ASCE STANDARD CE/ASCE 38-02 "AMERICAN SOCIETY OF CIVIL ENGINEERS STANDARD GUIDELINE FOR THE COLLECTION AND DEPICTION OF EXISTING SUBSURFACE UTILITY DATA"

CI/ASCE 3802 SUBSURFACE UTILITY QUALITY LEVEL INDEX

1. QUALITY LEVEL A (QLA): UTILITY INFORMATION WHICH HAS BEEN VISUALLY VERIFIED, SURVEY LOCATED (BOTH HORIZONTALLY AND VERTICALLY) AND ACCURATELY REDUCED ONTO THE DRAWINGS. THIS IS TYPICALLY SHOWN AS A HV VERIFICATION EXCAVATION HOLE.

2. QUALITY LEVEL B (QLB): UTILITY INFORMATION DERIVED BY MARKING THE APPROXIMATE SURFACE HORIZONTAL LOCATION OF UTILITY USING ELECTRONIC METHODS BY THE UTILITY OWNER. MARKINGS BY UTILITY OWNERS ARE ASSUMED TO BE LOCATED BY ELECTRONIC METHODS AND SEPARATE LOCATES WILL NOT BE PERFORMED BY THE ENGINEER. MARKING IS SUBSEQUENTLY FIELD SURVEY LOCATED AND ACCURATELY REDUCED ONTO THE DRAWINGS.

3. QUALITY LEVEL C (QLC): UTILITY INFORMATION OBTAINED AS BELOW FOR QUALITY LEVEL D, PLOTTED TO CORRELATE WITH SURFACE UTILITY FEATURES WHICH HAVE BEEN FIELD VERIFIED, SURVEY LOCATED AND ACCURATELY REDUCED ONTO THE DRAWINGS. INCLUDED IN THIS CATEGORY ARE AERIAL UTILITY INFORMATION AND UTILITY DEPICTIONS, WHICH IN THE PROFESSIONAL OPINION OF THE SUBSURFACE UTILITY ENGINEER, REPRESENT THE MOST PROBABLE APPROXIMATE HORIZONTAL LOCATION, TYPE AND / OR EXISTENCE OF A UTILITY.

4. QUALITY LEVEL D (QLD): UTILITY INFORMATION PLOTTED ON THE DRAWING BASED SOLELY ON RECORD INFORMATION, INDIVIDUAL RECOLLECTIONS OR THE EXISTENCE OF UTILITY SERVICE. IT SHALL BE NOTED THAT ALL INFORMATION SHOWN (OTHER THAN AT TEST HOLE LOCATIONS, SEE QLA ABOVE) WITH REFERENCE TO A UTILITIES SIZE, CAPACITY, MATERIAL COMPOSITION, CONDITION OR SERVICE STATUS SHALL BE CONSIDERED QLD EVEN THOUGH THE UTILITY MAY BE PLOTTED AND LABELED QLC OR QLB.

ABBREVIATIONS

AC	ASBESTOS CEMENT
ADPT	ADAPTER
ALT	ALTERNATE
ALUM	ALUMINUM
APPROX	APPROXIMATELY
ARV	AIR RELEASE VALVE ASSEMBLY
ASPH	ASPHALT
ASSEM	ASSEMBLY
AUX	AUXILIARY
B	BEND
BFO	BURIED FIBER OPTIC
BFP	BACKFLOW PREVENTER
BFV	BUTTERFLY VALVE
BL	BASE LINE
BLDG	BUILDING
BM	BENCHMARK
BO	BLOW OFF
BOT	BOTTOM
BRKT	BRACKET
BV	BALL VALVE
CB	CATCH BASIN
C\C	CENTER LINE TO CENTER LINE
CFS	CUBIC FEET PER SECOND
C&G	CURB AND GUTTER
CIP	CAST IRON PIPE
CIS	CUT IN SLEEVE
CL	CENTER LINE
CLF	CHAIN LINK FENCE
CM	CONCRETE MONUMENT
CMP	CORRUGATED METAL PIPE
CO	CLEAN OUT
CONC	CONCRETE
CONN	CONNECT
CONST	CONSTRUCT
CONT	CONTINUATION
CORP	CORPORATION
CPLG	COUPLING
CULV	CULVERT
CV	CHECK VALVE
CY	CUBIC YARD
DBI	DITCH BOTTOM INVERT
DBL	DOUBLE
DEFL	DEFLECTION
DHW	DESIGN HIGH WATER
DIA	DIAMETER
DIM	DIMENSION
DIP	DUCTILE IRON PIPE
DWLS	DOWELS
DWG	DRAWING
DWY	DRIVEWAY
ELEC	ELECTRIC
EA	EACH
EFF	EFFLUENT
ELEV	ELEVATION
EMB	EMBED OR EMBEDDED
E\P	EDGE OF PAVEMENT
ESMT	EASEMENT
EW	EACH WAY
EXIST	EXISTING
EXP JT	EXPANSION JOINT
FD	FLOOR DRAIN
FDEP	FLORIDA DEPT OF ENVIRON PROTECTION
FDOT	FLORIDA DEPT OF TRANSPORTATION
FA	FLANGED ADAPTER
FF	FINISH FLOOR
FCA	FLANGED COUPLING ADAPTER
FHA	FIRE HYDRANT ASSEMBLY
FIG	FIGURE
FLG	FLANGE
FL	FLOW LINE
FM	FORCE MAIN
FT	FEET
FTG	FOOTING
GA	GAUGE
GAL	GALLON
GALV	GALVANIZED
GEN	GENERATOR
GRD	GROUND
GSP	GALVANIZED STEEL PIPE
GM	GAS MAIN
GPM	GALLONS PER MINUTE
GV	GATE VALVE
HB	HOSE BIBB
HDD	HORIZONTAL DIRECTIONAL DRILL
HDPE	HIGH DENSITY POLYETHYLENE
HDWL	HEADWALL
HFCA	HARNESSED FLANGE COUPLING ADAPTER
HT	HEIGHT
HP	HORSE POWER
HORIZ	HORIZONTAL
HWL	HIGH WATER LEVEL
IE	INVERT ELEVATION
ID	INSIDE DIAMETER
IN	INCHES
INV	INVERT
IP	IRON PIPE
IR	IRON ROD
JB	JUNCTION BOX
JUNC	JUNCTION
LAT	LATERAL
LF	LINEAR FEET
LPS	LOW PRESSURE SEWER
LS	LIFT STATION
LT	LEFT
LWL	LOW WATER LEVEL
MAX	MAXIMUM
MATL	MATERIAL
MEG	MATCH EXISTING GRADE
MES	MITERED END SECTION
MFR	MANUFACTURER
MGD	MILLION GALLONS PER DAY
MH	MANHOLE
MIN	MINIMUM
MJ	MECHANICAL JOINT
MOD	MODIFIED
MOT	MAINTENANCE OF TRAFFIC
MTD	MOUNTED
MTG	MOUNTING
NG	NATURAL GROUND
NIC	NOT IN CONTRACT
NO	NUMBER
NOM	NOMINAL
NPT	NATIONAL PIPE THREAD
NPW	NON-POTABLE WATER
NTS	NOT TO SCALE
OCU	ORANGE COUNTY UTILITIES
OD	OUTSIDE DIAMETER
OHU	OVERHEAD UTILITY
O\E	OR EQUAL
O\O	OUTSIDE TO OUTSIDE
OPER	OPERATOR
OPNG	OPENING
OUC	ORLANDO UTILITIES COMMISSION
PAVT	PAVEMENT
PB	PULL BOX
PE	PLAIN END
PE	POLYETHYLENE
PG	PAGE
PI	POINT OF INTERSECTION
PH	PHASE
PL	PROPERTY LINE
PLS	PROFESSIONAL LAND SURVEYOR
POLY	POLYETHYLENE
PP	POWER POLE
PROP	PROPOSED
PS	PUMP STATION
PSI	POUNDS PER SQUARE INCH
PSM	PROFESSIONAL SURVEYOR & MAPPER
PUE	PERMANENT UTILITY EASEMENT
PV	PLUG VALVE
PVC	POLYVINYL CHLORIDE PIPE
QTY	QUANTITY
RAD PT	RADIUS POINT
R	RADIUS
RJ	RESTRAINED JOINT
R\R	RAIL ROAD
RCP	REINFORCED CONCRETE PIPE
RED	REDUCER
REINF	REINFORCED
REQ	REQUIRED
RESTR	RESTRAINED
RPZ	REDUCED PRESSURE ZONE
RT	RIGHT
RW	RECLAIMED WATER
R\W	RIGHT OF WAY
SAN	SANITARY SEWER
SB	SOIL BORING
SCH	SCHEDULE
SD	STORM DRAIN
SECT	SECTION
SF	SQUARE FEET
SHT	SHEET
SLV	SLEEVE
SPECS	SPECIFICATIONS
SQ	SQUARE
SS	STAINLESS STEEL
STA	STATION
STD	STANDARD
STL	STEEL
SY	SQUARE YARDS
SYS	SYSTEM
T&B	TOP AND BOTTOM
TBM	TEMPORARY BENCHMARK
TCE	TEMPORARY CONSTRUCTION EASEMENT
TEL	TELEPHONE
TEMP	TEMPORARY
THD	THREADED
THK	THICK
TOB	TOP OF BANK
TOC	TOP OF CONCRETE
TOS	TOP OF SLAB
TOW	TOP OF WALL
TS&V	TAPPING SLEEVE AND VALVE
TYP	TYPICAL
UG	UNDERGROUND
UKN	UNKNOWN
VAC	VOLTAGE ALTERNATING CURRENT
VCP	VITRIFIED CLAY PIPE
VDC	VOLTAGE DIRECT CURRENT
VERT	VERTICAL
VVH	VERIFIED VERTICALLY & HORIZONTALLY
w/	WITH
w/o	WITH OUT
WL	WATER LEVEL
WM	WATER MAIN
W\M	WATER METER
WP	WALL PIPE
WRF	WATER RECLAMATION FACILITY
WS	WATER SERVICE
WS	WATER SURFACE
WWF	WELDED WIRE FABRIC

No.	Date	Revision	By	No.	Date	Revision	By
1				1			
2				2			
3				3			
4				4			

BFA

BARNES, FERLAND AND ASSOCIATES, INC.
1230 HILLCREST ST., STE 100
ORLANDO, FL 32803
PH: (407) 896-8608
ENGINEERING REGISTRY NO. 6899

Designed by:	WET	Date: 10/19/2023
Drawn by:	JAB	Scale: AS NOTED
Checked by:	WET	
Approved by:	WET	
Job No.	2018-11A	©2023

Oakland Ave Phase 2
City of Ocoee, Florida

Plans Prepared By:
CPH, Inc.
500 W. Fulton St. Sanford, FL 32771
Ph: 407.322.6841
Licenses:
Eng. C.O.A. No. 3215 *Arch. Lic. No. AA26000926*
Survey L.B. No. 7143 *Landscp. Lic. No. LC0000298*

WILLIE E. THOMAS, P.E.
FL P.E. No. 57612

LEGEND AND ABBREVIATIONS

Sheet No.
U-1

Drawing name: F:\CIVIL\PROJECTS\2018\2018-11 CPH Ocoee Downtown Streets Redev\2018-11 A Oakland Avenue\5.0 Drawings\2018-11 A Oakland PH 2 U-01.dwg Oct 19, 2023 - 10:13am jbish

GENERAL UTILITY NOTES:

1. ALL WORK, MATERIAL, TESTING AND SAMPLING MUST BE IN ACCORDANCE WITH THE CONTRACT DOCUMENTS WHICH SHALL INCLUDE, BUT NOT BE LIMITED TO THE AGREEMENT, SPECIFIC CONDITIONS, METHOD OF PAYMENT AND THE CITY OF OCOEE "ENGINEERING STANDARDS MANUAL" 2012 EDITION. CONFLICTS BETWEEN THE ENGINEERING STANDARDS MANUAL AND SPECIFIED REQUIREMENTS OR INSTRUCTIONS SHALL BE RESOLVED BY THE MORE STRINGENT REQUIREMENTS.
2. THESE NOTES AND OTHER REFERENCES WITHIN THE CONTRACT DOCUMENTS TO ANY SPECIFIC ARTICLE OF THE ENGINEERING STANDARDS MANUAL SHALL NOT BE INTERPRETED TO EXCLUDE ANY OTHER REQUIREMENTS NOT DIRECTLY MENTIONED WITHIN THE ENGINEERING STANDARDS MANUAL.
3. THE CITY OF OCOEE ENGINEERING STANDARDS MANUAL'S PURPOSE IS TO PROVIDE DIRECTION TO THE DEVELOPMENT COMMUNITY FOR IMPROVEMENTS TO BE DEDICATED AND/OR MAINTAINED BY THE CITY AND TO SUPPLIMENT CONTRACT DOCUMENTS WITH SPECIFICATIONS, MATERIALS AND TESTING REQUIREMENTS. THE CONTRACTOR SHALL INTERPRET APPLICABLE REFERENCES TO DEVELOPER, OWNER AND/OR DEVELOPER'S PERSONNEL INCLUDING ENGINEER AS "CONTRACTOR". ANY REFERENCE WITHIN THE ENGINEERING STANDARDS MANUAL TO "CITY ENGINEER" AND/OR "ENGINEER" SHALL MEAN "UTILITIES DIRECTOR".
4. CONTACT THE CITY OF OCOEE UTILITIES DEPARTMENT AT 407-9053159 (EMERGENCY AFTER-HOURS 407-428-5766).
5. CITY OF OCOEE WATER, WASTEWATER AND RECLAIMED WATER VALVES, PUMP STATIONS OR OTHER UTILITY INFRASTRUCTURE ARE TO BE OPERATED ONLY BY CITY OF OCOEE PERSONNEL.
6. CONTRACTOR SHALL COMPLY WITH CHAPTER 556, F.S., "UNDERGROUND FACILITY DAMAGE PREVENTION AND SAFETY ACT" AND CHAPTER 553, F.S., "FLORIDA TRENCH SAFETY ACT, PART IV".
7. CONTRACTOR SHALL COMPLY WITH ALL CONDITIONS OF THE FLORIDA STATUTES (F.S.) CHAPTER 556; "UNDERGROUND FACILITY DAMAGE PREVENTION AND SAFETY ACT" WHICH SHALL INCLUDE BUT NOT BE LIMITED TO, CALLING "SUNSHINE 811 BEFORE EXCAVATION(S).
8. CONTRACTOR SHALL EXERCISE EXTREME CAUTION WHEN EXCAVATING IN PROXIMITY OF WATER MAINS, WASTEWATER FORCE AND GRAVITY MAINS, AND RECLAIMED WATER MAIN. LOCATIONS SHOWN ON THE PLANS ARE NOT EXACT OR GUARANTEED. THE CONTRACTOR IS RESPONSIBLE FOR FIELD VERIFICATION OF EXISTING UTILITY LOCATIONS.
9. CONTRACTOR SHALL FIELD VERIFY THE EXISTENCE AND LOCATION OF ALL ABOVEGROUND AND UNDERGROUND UTILITIES. EXTREME CAUTION SHALL BE EXERCISED IN AREAS OF FIBER OPTICS. CONTRACTOR SHALL BRING ALL CONFLICTS TO THE CITY'S ATTENTION.
10. CONTRACTOR SHALL COORDINATE WITH ALL OTHER UTILITY OWNERS FOR RESOLUTION OF CONFLICTS. CONTRACTOR SHALL HAVE 48 HOURS TO DETERMINE THE RESOLUTION OF ANY UNKNOWN OR UNFORSEEN CONFLICTS. COORDINATION COST INCURRED SHALL BE BORNE BY THE CONTRACTOR.
11. CONTRACTOR SHALL SUPPORT AND PROTECT ALL EXISTING UTILITIES; AND SHALL BE RESPONSIBLE FOR COORDINATING WITH UTILITY OWNERS AND FOR PROVIDING TEMPORARY SUPPORT FOR UTILITY POLES AND ALL OTHER UTILITIES DURING CONSTRUCTION.
12. NO VALVE BOXES, METERS, PORTIONS OF MANHOLES, OR OTHER APPURTENANCES OF ANY KIND RELATING TO CONTRACTOR'S WORK SHALL BE LOCATED IN THE CURB, SIDEWALK, ROADWAY AND/OR DRIVEWAY UNLESS SPECIFICALLY NOTED ON THE PLANS OR DIRECTED BY THE ENGINEER.
13. WHERE REQUIRED, AT NO ADDIONAL COST TO THE CITY, THE CONTRACTOR SHALL USE TEMPORARY SHEETING OR TRENCH BOXES TO MINIMIZE THE SIZE OF THE EXCAVATIONS AND PROTECT EXISTING ROADWAYS, UTILITIES, AND OTHER FACILITIES, OR AS NEEDED TO REMAIN WITHIN THE LIMITS OF

GENERAL UTILITY NOTES:

1. CONTRACTOR SHALL PROVIDE CITY WITH AS-BUILT DRAWING DOCUMENTATION CERTIFIED BY A REGISTERED FLORIDA LAND SURVEYOR AS DESCRIBED IN THE FOLLOWING ITEMS.
2. AS-BUILT PLANS HORIZONTAL CONTROL SHALL BE BASED ON FLORIDA STATE PLANE COORDINATES "FLORIDA EAST NAD27". VERTICAL CONTROL SHALL BE BASED ON NAD83.
3. CONTROL SHALL BE PROVIDED ON ALL WATER SYSTEMS INCLUDING BUT NOT LIMITED TO MAINS, FITTINGS, SERVICE CONNECTIONS (BOTH ENDS), VALVES, FIRE HYDRANTS, AND APPURTENANCES. AS-BUILT PLANS SHALL NOTE ALL DEVIATIONS FROM PLANS INCLUDING SIZES, MATERIALS, AND DEFLECTION BOTH VERTICAL AND HORIZONTAL.
4. "AS-BUILT" INFORMATION SUBMITTED TO THE CITY SHALL BE SUBMITTED BOTH IN PAPER AND ELECTRONIC (AUTOCAD DWG) FORMATS. THE DATA MUST BE ACCURATE, CLEAR AND LEGIBLE TO SATISFY THE CITY THAT THE INFORMATION PROVIDES A TRUE REPRESENTATION OF THE IMPROVEMENTS CONSTRUCTED.
5. THE SUBMITTED DATA MUST BE CERTIFIED (SIGNED AND SEALED WHEN APPLICABLE) BY A STATE OF FLORIDA LICENSED PROFESSIONAL LAND SURVEYOR.
6. CONTRACTOR SHALL SUBMIT SIGNED & SEALED AS-BUILTS TO THE CITY IN ACCORDANCE WITH SECTION 3.01.05 OF THE ENGINEERING STANDARDS MANUAL IN THE FOLLOWING FORMATS:
   A) 1 HARD COPY,
   B) 1 PDF COPY,
   C) CAD COPY DRAWN IN STATE PLANE COORDINATES.

WATER, WASTEWATER AND RECLAIMED WATER SYSTEM GENERAL NOTES:

1. THIS PROJECT IS EXCLUSIVE TO WATER (POTABLE) SYSTEM AND SANITARY SEWER FORCE MAINS; AND SPECIFIC NOTES AND/OR REFERENCES GRAVITY SANITARY SEWER AND/OR RECLAIMED WATER CONSTRUCTION NOTES SHALL NOT BE GERMANE TO THIS PROJECT.
2. PAVEMENT REMOVAL AND REPLACEMENT SHALL BE BASED ON ARTICLE 3, 9, 11, 12 AND 13: ENGINEERING STANDARDS MANUAL. PAVEMENT SECTION SHALL BE TO A STANDARD A, 2" ASPHALT SERVICE, 8" LIMEROCK BASE (OR EQUAL) AND 12" STABILIZED SUB-BASE.
3. WATER MAIN MAY BE INSTALLED USING THE DIRECTIONAL DRILL METHOD BUT SHALL BE LIMITED TO MAINS FROM NOMINAL SIZES OF 4" TO 12". DIRECTIONAL DRILL MATERIAL SHALL BE HIGH DENSITY POLYETHYLENE MATERIAL AND METHODS SHALL BE IN ACCORDANCE WITH "ARTICLE 33 ENGINEERING STANDARD". PAYMENT FOR THIS METHOD SHALL UTILIZE SIMILAR DIRECT BURIAL METHOD AND SHALL NOT RESULT IN ADDITIONAL COST TO THE CITY.
4. CONTRACTOR SHALL FLUSH, DISINFECT AND PERFORM HYDROSTATIC TESTING OF CONSTRUCTED WATER MAINS INCLUDING ALL SERVICES, VALVES, HYDRANTS AND APPURTENANCES PER "ARTICLE 31: ENGINEERING STANDARDS MANUAL". CONTRACTOR SHALL COORDINATE WITH CITY PERSONNEL, WITH 48 HOURS NOTICE, THE COLLECTION AND CONVEYANCE OF SAMPLES TO A CITY APPROVED TESTING LABORATORY. CONTRACTOR SHALL REIMBURSE CITY FOR ALL FAILED MATERIAL TESTING SAMPLES.
5. ALL EXISTING MAINS SHALL REMAIN IN SERVICE UNTIL THE PROPOSED MAIN(S) ARE ACCEPTED FOR SERVICE AND CLEARED FOR SERVICE BY FDEP. CONTRACTOR SHALL COORDINATE WITH CITY FOR THE CITY TO RELOCATE EXISTING WATER METERS TO NEW SERVICES. CONTRACTOR'S WORK WILL NOT INCLUDE RELOCATING, ADJUSTING, AND/OR TYING-IN EXISTING METERS.
6. CITY SHALL PROVIDE REASONABLE AND NECESSARY WATER FOR CONSTRUCTION THROUGH A CONSTRUCTION METER/BACKFLOW JUMPER AT NO COST TO THE CONTRACTOR. CONTRACTOR SHALL SUPPLY JUMPER OR MAY CHECK OUT A CITY-OWNED CONSTRUCTION METER/BACKFLOW HYDRANT METER. CONTRACTOR SHALL BE RESPONSIBLE FOR LOSS OR DAMAGE TO THE HYDRANT METER.
7. PIPE MATERIAL, INCLUDING FITTINGS, SHALL BE PER "ARTICLE 31: ENGINEERING STANDARDS MANUAL".
8. ALL POLYETHYLENE TUBING, SERVICES, AND MAINS SHALL BE CONTINUOUS WITH THE MINIMUM FITTINGS AND SHALL BE JOINED EXCLUSIVELY BY UTILIZING COMPRESSION-TYPE FITTINGS WITH CONFINED GRIP SEALS AND COUPLING NUTS.
9. POLYETHYLENE WRAP OR ENCASEMENT IS NOT REQUIRED FOR THIS PROJECT.
10. DE-WATERING SHALL BE PROVIDED DURING CONSTRUCTION TO KEEP GROUND WATER ELEVATION TO A MINIMUM OF 6 INCHES BELOW PROPOSED WATER MAIN.
11. CONTRACTOR SHALL BE RESPONSIBLE FOR SUBMITTING A CONSTRUCTION PHASING PLAN/SCHEDULE FOR CITY APPROVAL PRIOR TO (14) DAYS BEFORE BEGINNING CONSTRUCTION. PHASING PLAN/SCHEDULE SHALL INCLUDE TESTING, SAMPLING AND FDEP CLEARANCE MILESTONES AND COMPLETED WORK DATE.
12. ALL THRUST PROTECTION SHALL BE BY RETAINING GLANDS UNLESS SPECIFICALLY CALLED OUT IN PLANS OR AS APPROVED BY THE ENGINEER.
13. WATER MAIN SEPARATIONS FOR ENVIRONMENTAL HAZARDS SHALL BE IN ACCORDANCE WITH FDEP REQUIREMENTS AND OR AS SPECIFIED WITH THE PLAN DETAIL.
14. CONTRACTOR'S WORK WILL NOT INCLUDE THE ABANDONMENT OF WATER LINES UNLESS SPECIFICALLY ADDRESS IN THE CONSTRUCTION PLANS.

EROSION CONTROL NOTES:

1. THE CONTACTOR SHALL PROVIDE TEMPORARY EROSION AND SEDIMENTATION MEASURES IN ACCORDANCE WITH NPDES MS4 PERMIT REQUIREMENTS. THE CONTRACTOR'S MEASURES SHALL PROTECT THE CONDITION OF EXISTING SLOPES AND CONTROL SEDIMENTATION AND TURBIDITY WITHIN WATER COURSES AND WETLANDS WITHIN LIMITS THAT ARE ACCEPTABLE TO THE REGULATORY AGENCIES HAVING JURISDICTION. THESE MEASURES SHALL INCLUDE SILT FENCING, BARRIERS, SYNTHETIC HAY BALES OR OTHER ACCEPTABLE MEASURES. CONTRACTOR SHALL BE RESPONSIBLE FOR DEVELOPING A STORM WATER POLLUTION PREVENTION PLAN AND FOLLOWING ALL BEST MANAGEMENT PRACTICES INCLUDING OBTAINING ALL REQUIRED PERMITS.
2. EXISTING STORM WATER SYSTEMS SHALL BE PROTECTED AT ALL TIMES TO PREVENT SEDIMENTATION WITHIN THEIR CONVEYANCE.SEDIMENTATION PRTEVENTION SHALL COMPLY WITH OR EXCEED "BEST MANAGEMENT PRACTICES" IN ACCORDANCE WITH THE ST. JOHNS RIVER WATER MANAGEMENT DISTRICT.
3. STORM DRAIN INLET PROTECTION SHALL BE ACCOMPLISHED BY: PERFORATED UNDER-DRAIN PIPE WITH SOCK OR OTHER APPROVED METHODS FIXED TO ENSURE NO FLOATING AND/OR SHORT CIRCUITING OF RUN-OFF.
4. ANY SEDIMENTATION OCCURRING DURING CONSTRUCTION SHALL BE CLEANED AND REMOVED DAILY AND AFTER EACH RAIN EVENT AT THE CONTRACTOR'S EXPENSE.

No.	Date	Revision	By	No.	Date	Revision	By
1				1			
2				2			
3				3			
4				4			

BFA

BARNES, FERLAND AND ASSOCIATES, INC.
1230 HILLCREST ST., STE 100
ORLANDO, FL 32803
PH: (407) 896-8608
ENGINEERING REGISTRY NO. 6899

Designed by:	WET	Date: 10/19/2023
Drawn by:	JAB	Scale: AS NOTED
Checked by:	WET	
Approved by:	WET	
Job No.	2018-11A	©2023

Oakland Ave Phase 2
City of Ocoee, Florida

Plans Prepared By:
CPH, Inc.
500 W. Fulton St. Sanford, FL 32771
Ph: 407.322.6841
Licenses:
Eng. C.O.A. No. 3215 *Arch. Lic. No. AA26000926*
Survey L.B. No. 7143 *Landscp. Lic. No. LC0000298*

WILLIE E. THOMAS, P.E.
FL P.E. No. 57612

GENERAL NOTES

Sheet No.
U-2

Drawing name: F:\CIVIL\PROJECTS\2018\2018-11 CPH Ocoee Downtown Streets Redev\2018-11 A Oakland Avenue\5.0 Drawings\2018-11 A Oakland PH 2 U-02.dwg Oct 19, 2023 - 10:13am jbish

NOTE A
RESTRAIN EXIST WM PER NOTE #5

NOTE B
STA 18+87.75.75, 214.50'L
INSTALL:
1-8"x6" TEE
1-8" GV (PLUGGED)

NOTE C
STA 18+77.17, 207.58' L
CONNECT TO EXIST 6" WM
INSTALL:
1-6" TAPPING SLEEVE AND VALVE
1-6" LINE STOP ASSEMBLY
1-6" CAP

NOTE D
STA 18+92.25, 209.0' L
INSTALL:
2-8" 45° BENDS
1-OFFSET ARV ASSEMBLY

NOTE E
STA 19+03.50, 192.33' L
INSTALL:
2-8" 45° BENDS

NOTE F
STA 19+12.33, 176.75' L
REMOVE AND REPLACE EXIST FHA
INSTALL:
1- FIRE HYDRANT ASSEMBLY

NOTES:
1. ALL IMPROVEMENTS SHALL BE IN CONFORMANCE WITH THE CURRENT CITY OF OCOEE ENGINEERING STANDARDS MANUAL, MATERIAL LIST, AND DETAILS. FINAL PLAN APPROVAL DOES NOT PROVIDE EXEMPTION FROM THESE REQUIREMENTS.
2. ANY DEVIATION FROM THE CITY OF OCOEE ENGINEERING AND FDEP STANDARDS MUST REQUESTED AND APPROVED IN WRITING PRIOR TO CONSTRUCTION.
3. THE MOST STRINGENT STANDARDS BETWEEN THE CITY OF OCOEE AND FDEP STANDARDS SHALL BE FOLLOWED FOR ALL PUBLIC UTILITIES.
4. CONTRACTOR SHALL REFER TO THE CITY OF OCOEE ENGINEERING STANDARDS MANUAL, LAND DEVELOPMENT CODE, APPROVED MATERIALS LIST, AND CITY DETAILS. THE MOST STRINGENT STANDARDS BETWEEN THE CITY OF OCOEE AND STANDARDS SET FORTH IN THESE NOTES SHALL BE FOLLOWED.
5. THE CONTRACTOR SHALL INSTALL MECHANICAL JOINT RESTRAINTS TO EXISTING WATER MAINS AS REQUIRED FOR PLUG/TEE CONDITION, SEE DETAILS.

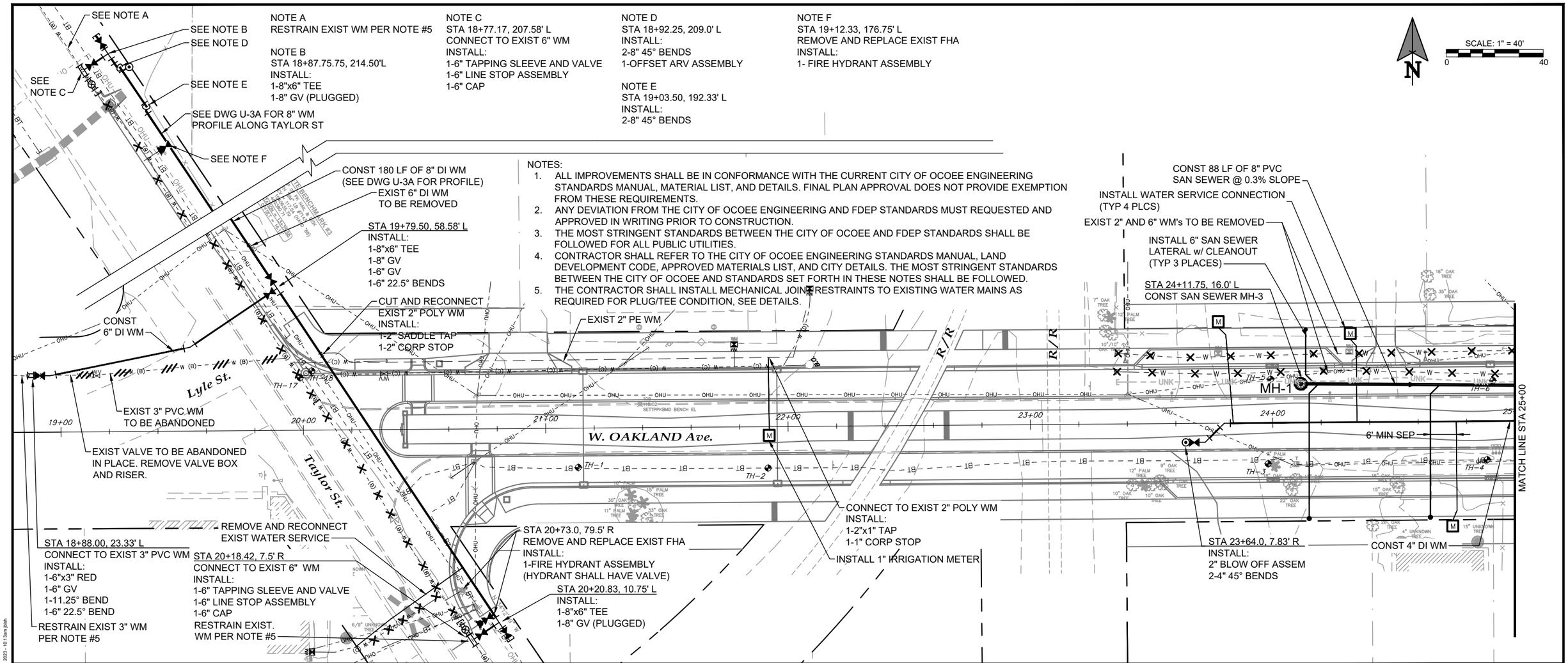

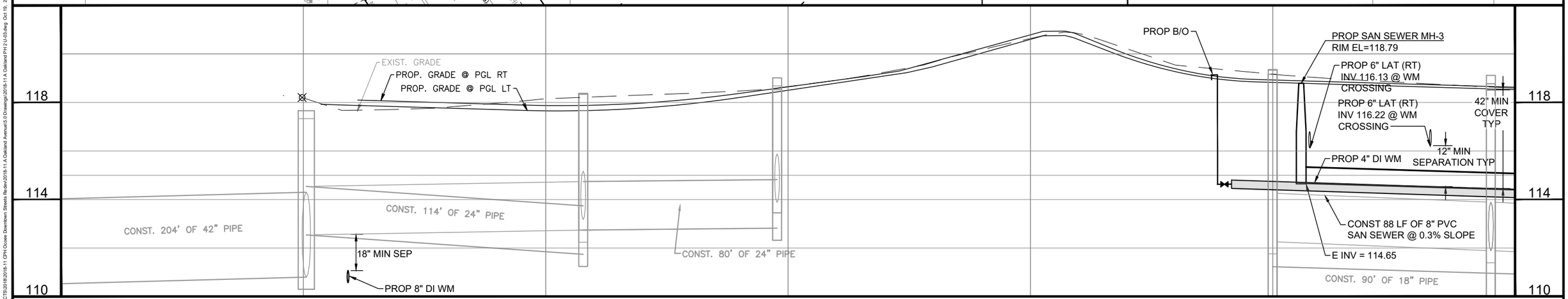

No.	Date	Revision	By	No.	Date	Revision	By
1				1			
2				2			
3				3			
4				4			

BFA

BARNES, FERLAND AND ASSOCIATES, INC.
1230 HILLCREST ST., STE 100
ORLANDO, FL 32803
PH: (407) 896-8608
ENGINEERING REGISTRY NO. 6899

Designed by:	WET	Date: 10/19/2023	
Drawn by:	JAB	Scale: AS NOTED	
Checked by:	WET		
Approved by:	WET		
Job No.	2018-11A	©2023	

Oakland Ave Phase 2
City of Ocoee, Florida

Plans Prepared By:
CPH, Inc.
500 W. Fulton St. Sanford, FL 32771
Ph: 407.322.6841
Licenses:
Eng. C.O.A. No. 3215 *Arch. Lic. No. AA26000926*
Survey L.B. No. 7143 *Landscp. Lic. No. LC0000298*

WILLIE E. THOMAS, P.E.
FL P.E. No. 57612

OAKLAND AVE
PLAN AND PROFILE
STA 20+00 TO STA 25+00

Sheet No.
U-3

Drawing name: F:\CIVIL\PROJECTS\2018\2018-11 CPH Ocoee Downtown Sheets Redev\2018-11 A Oakland Avenue\5.0 Drawings\2018-11 A Oakland PH 2 U-03.dwg Oct 19, 2023 - 10:13am jsiah

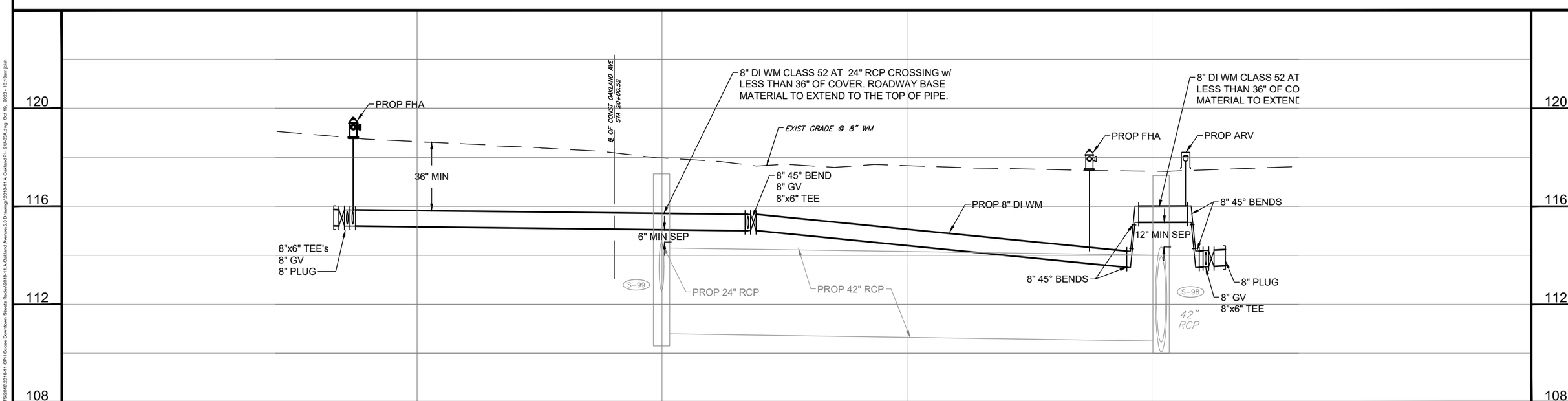

No.	Date	Revision	By	No.	Date	Revision	By
1				1			
2				2			
3				3			
4				4			

BFA

BARNES, FERLAND AND ASSOCIATES, INC.
1230 HILLCREST ST., STE 100
ORLANDO, FL 32803
PH: (407) 896-8608
ENGINEERING REGISTRY NO. 6899

Designed by:	WET	Date: 10/19/2023
Drawn by:	JAB	Scale: AS NOTED
Checked by:	WET	
Approved by:	WET	
Job No.	2018-11A	©2023

Oakland Ave Phase 2
City of Ocoee, Florida

Plans Prepared By:
CPH, Inc.
500 W. Fulton St. Sanford, FL 32771
Ph: 407.322.6841
Licenses:
Eng. C.O.A. No. 3215 *Arch. Lic. No. AA26000926*
Survey L.B. No. 7143 *Landscp. Lic. No. LC0000298*

WILLIE E. THOMAS, P.E.
FL P.E. No. 57612

TAYLOR AVE
SPECIAL PROFILE

Sheet No.
U-3A

Drawing name: F:\OVIL\PROJECTS\2018\2018-11 CPH Ocoee Downtown Streets Redev\2018-11 A Oakland Avenue\5.0 Drawings\2018-11 A Oakland PH 2 U-03A.dwg Oct 19, 2023 - 10:13am jsish

NOTES:

1. ALL IMPROVEMENTS SHALL BE IN CONFORMANCE WITH THE CURRENT CITY OF OCOEE ENGINEERING STANDARDS MANUAL, MATERIAL LIST, AND DETAILS. FINAL PLAN APPROVAL DOES NOT PROVIDE EXEMPTION FROM THESE REQUIREMENTS.
2. ANY DEVIATION FROM THE CITY OF OCOEE ENGINEERING AND FDEP STANDARDS MUST REQUESTED AND APPROVED IN WRITING PRIOR TO CONSTRUCTION.
3. THE MOST STRINGENT STANDARDS BETWEEN THE CITY OF OCOEE AND FDEP STANDARDS SHALL BE FOLLOWED FOR ALL PUBLIC UTILITIES.
4. CONTRACTOR SHALL REFER TO THE CITY OF OCOEE ENGINEERING STANDARDS MANUAL, LAND DEVELOPMENT CODE, APPROVED MATERIALS LIST, AND CITY DETAILS. THE MOST STRINGENT STANDARDS BETWEEN THE CITY OF OCOEE AND STANDARDS SET FORTH IN THESE NOTES SHALL BE FOLLOWED.
5. THE CONTRACTOR SHALL INSTALL MECHANICAL JOINT RESTRAINTS TO EXISTING WATER MAINS AS REQUIRED FOR PLUG/TEE CONDITION, SEE DETAILS.

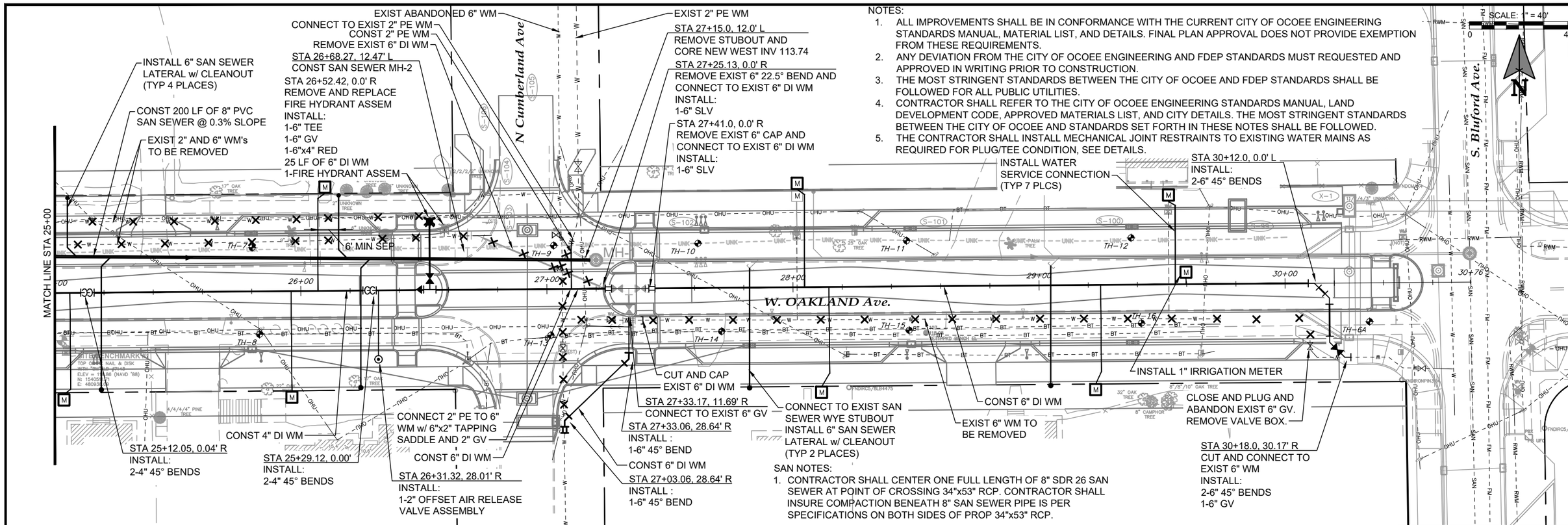

SAN NOTES:

1. CONTRACTOR SHALL CENTER ONE FULL LENGTH OF 8" SDR 26 SAN SEWER AT POINT OF CROSSING 34"x53" RCP. CONTRACTOR SHALL INSURE COMPACTION BENEATH 8" SAN SEWER PIPE IS PER SPECIFICATIONS ON BOTH SIDES OF PROP 34"x53" RCP.

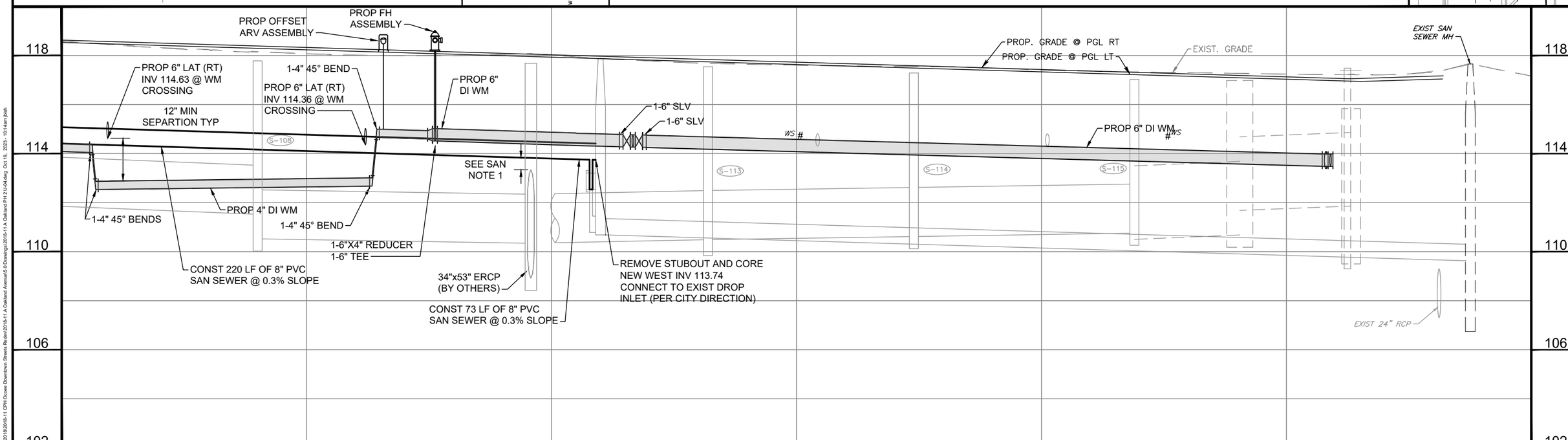

No.	Date	Revision	By	No.	Date	Revision	By
1				1			
2				2			
3				3			
4				4			

BFA

BARNES, FERLAND AND ASSOCIATES, INC.
1230 HILLCREST ST., STE 100
ORLANDO, FL 32803
PH: (407) 896-8608
ENGINEERING REGISTRY NO. 6899

Designed by:	WET	Date: 10/19/2023
Drawn by:	JAB	Scale: AS NOTED
Checked by:	WET	
Approved by:	WET	
Job No.	2018-11A	©2023

Oakland Ave Phase 2
City of Ocoee, Florida

Plans Prepared By:
CPH, Inc.
500 W. Fulton St. Sanford, FL 32771
Ph: 407.322.6841
Licenses:
Eng. C.O.A. No. 3215 *Arch. Lic. No. AA26000926*
Survey L.B. No. 7143 *Landscp. Lic. No. LC0000298*

WILLIE E. THOMAS, P.E.
FL P.E. No. 57612

OAKLAND AVE
PLAN AND PROFILE
STA 25+00 TO STA 30+76

Sheet No.
U-4

Drawing name: F:\CIVIL\PROJECTS\2018\2018-11 CPH Ocoee Downtown Streets Redev\2018-11 A Oakland Avenue\5.0 Drawings\2018-11 A Oakland PH 2 U-04.dwg Oct 19, 2023 - 10:14am jbish

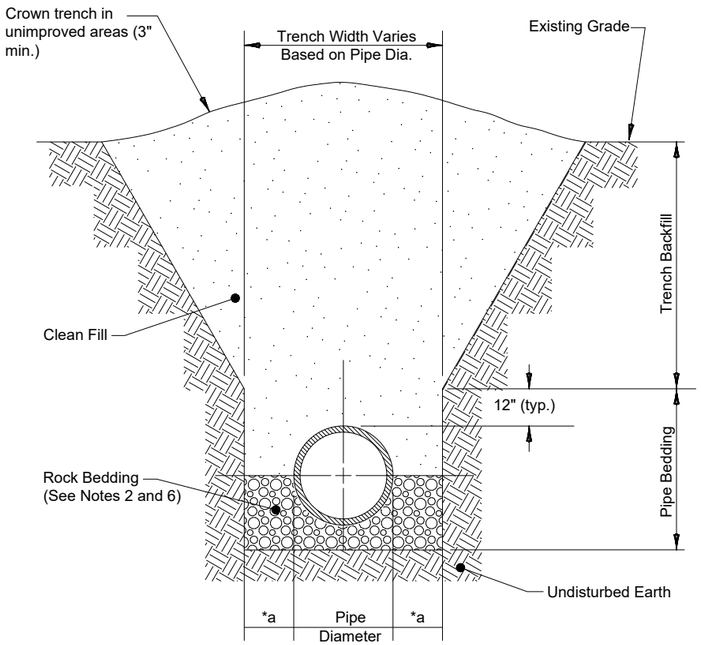

*a See Note 3

NOTES:

1. Pipe bedding material and trench backfill shall be select common (clean) fill compacted to 95% (98% in roadway) of the maximum density as per AASHTO T-180.
2. Contractor shall install crushed rock (or equivalent bedding material) where pipe bedding does not provide solid support (yielding or plastic). Depth of material shall be a minimum of 6", or as needed, to provide non-yielding support for the pipe. All unsuitable material shall be removed from pipe bedding unless special provisions are approved by the City.
3. Excavated trench width at pipe haunch shall be sufficient in size for haunch compaction, but shall be no greater than 15" on each side of pipe for pipes less than 24" in diameter (24" for pipes 24" in diameter or greater.)
4. Water shall not be permitted in trench line during construction.
5. Pipe line shall be installed with bell fitting facing upgrade.
6. Gravity sewer shall have a 6" minimum rock bed.

Pipe Bedding and Trench Detail
September 2019 N.T.S. Ocoee UT001

PVC/HDPE Restraint Table

Minimum Length (FT) to be Restrained on each side of Fitting(s)

Fittings	Pipe Size						
	4"	6"	8"	10"	12"	16"	20"
90° Bend	18	24	32	38	44	55	74
45° Bend	10	10	13	16	18	23	31
22 1/2° Bend	10	10	10	10	10	11	15
11 1/4° Bend	10	10	10	10	10	10	10
Plug or Branch of Tee	30	47	64	81	98	133	167

NOTES:

1. The restraint values as indicated by the "Restraint Table" are minimum values. Design engineer shall be responsible for confirming field conditions, and make adjustments accordingly.
2. All fittings shall have restrained joints unless otherwise indicated.
3. No restraints required if continuous pipe length to fitting is greater than value provided in "Restraint Table" above.
4. Where two or more fittings are laid in-line, use greatest restraint length for coverage.
5. For in-line valves and through run of tees: outside limits of restrained joints from other fittings need not be restrained unless otherwise indicated.
6. Lengths shown in the table have been calculated in accordance with the procedures outlined in "Thrust Restraint Design for Ductile Iron Pipe" as published by DIPRA, with the following assumptions:

   Working Pressure: 150 PSI
   Soil Designation: SM (Silty Sand, Sand-Silt Mix.)
   Laying Conditions: 5

7. For pipe sizes not included in the Restraint Table or pipe material not adhering to given conditions, design engineer shall determine and specify pipe lengths which shall be approved by the City.

PVC/HDPE Restraint Table
April 2019 N.T.S. Ocoee UT004

D.I.P. Restraint Table

Minimum Length (FT) to be Restrained on Each Side of Fitting(s)

Fittings	Pipe Size					
	4"	6"	8"	10"	12"	16"
90° Bend	15	21	27	32	37	47
45° Bend	7	5	11	13	16	20
22 1/2° Bend	5	5	6	7	8	10
11 1/4° Bend	5	5	5	5	5	6
Plug or Branch of Tee	30	47	64	81	98	133

NOTES:

1. The restraint values as indicated by the "Restraint Table" are minimum values.Design engineer shall be responsible for confirming field conditions, and make adjustments accordingly.
2. All fittings shall have restrained joints unless otherwise indicated.
3. No restraints required if continuous pipe length is greater than value provided in "Restraint Table" above.
4. Where two or more fittings are laid in-line, use greatest restraint length for coverage.
5. For in-line valves and through run of tees: outside limits of restrained joints from other fittings need not be restrained unless otherwise indicated.
6. Lengths shown in the table have been calculated in accordance with the procedures outlined in "Thrust Restraint Design for Ductile Iron Pipe" as published by DIPRA, with the following assumptions:

   Working Pressure: 150 PSI
   Soil Designation: SM (Silty Sand, Sand-Silt Mix.)
   Laying Conditions: 5

7. For pipe encased in polyethylene, use values given in parentheses or increase the given value by 150%.
8. For pipe sizes not included in the Restraint Table or pipe material not adhering to given conditions, design engineer shall determine and specify pipe lengths which shall be approved by the City.

Ductile Iron Pipe Restraint Table
April 2019 N.T.S. Ocoee UT005

No.	Date	Revision	By	No.	Date	Revision	By
1				5			
2				6			
3				7			
4				8			

BFA

BARNES, FERLAND AND ASSOCIATES, INC.
1230 HILLCREST ST., STE 100
ORLANDO, FL 32803
PH: (407) 896-8608
ENGINEERING REGISTRY NO. 6899

Designed by:	WET	Date: 10/19/2023
Drawn by:	JAB	Scale: AS NOTED
Checked by:	WET	
Approved by:	WET	
Job No.	2018-11A	©2023

Oakland Ave Phase 2
City of Ocoee, Florida

Plans Prepared By:
CPH, Inc.
500 W. Fulton St. Sanford, FL 32771
Ph: 407.322.6841
Licenses:
Eng. C.O.A. No. 3215 *Arch. Lic. No. AA2600926*
Survey L.B. No. 7143 *Landscp. Lic. No. LC0000298*

WILLIE E. THOMAS, P.E.
FL P.E. No. 57612

UTILITY CONSTRUCTION DETAILS

Sheet No.
U-5

Drawing name: F:\OVIL\PROJECTS\2018\2018-11 CPH Ocoee Downtown Streets Redev\2018-11 A Oakland Avenue\5.0 Drawings\2018-11 A Oakland PH 2 U-05.dwg Oct 19, 2023 - 10:14am jbah

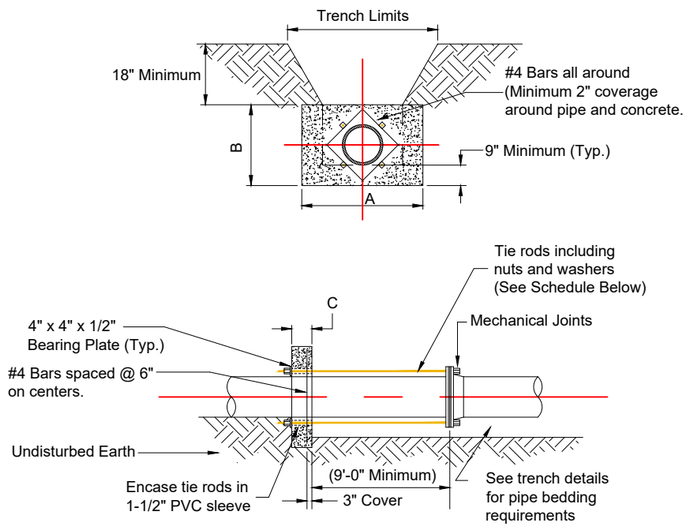

Schedule of Dimensions and Materials					
Pipe Size	Dimensions			Tie Rods Req'd	
	A	B	C	Dia.	No.
6"	2.0'	2.0'	1.0'	3/4"	2
8"	2.5'	2.5'	1.0'	3/4"	2
10"	3.5'	3.0'	1.0'	3/4"	4
12"	5.0'	3.0'	1.0'	3/4"	4
16"	6.0'	4.0'	1.5'	3/4"	4
20"	8.0'	5.0'	1.5'	3/4"	6
24"	9.0'	6.0'	1.5'	3/4"	8
Note: Thrust block areas to computed on 2,000 LBS. per square foot allowable soils pressure with a working pressure of 150 P.S.I. and pipe capped at the end. See Note 5 below conditions deviations.					

NOTES:

1. Use of a thrust collar shall only be allowed due to special conditions and must be approved by the City.
2. Additional reinforcements shall be as specified by the engineer.
3. Minimum compressive strength for concrete shall be 3,000 PSI @28 days.
4. Bedding, backfill, and compaction shall be as specified elsewhere in the standard drawings.
5. All form boards shall be removed prior backfill.
6. Condition where allowable soil bearing capacity is less than above specified and/or operating pressure are greater than specified, engineer/contractor shall submit for approval special design for the condition(s) deviating from standards.
7. No allowance shall be made for friction between the pipe wall and the thrust collar.

Utility Mains Thrust Collar Detail

April 2019 N.T.S. Ocoee UT006

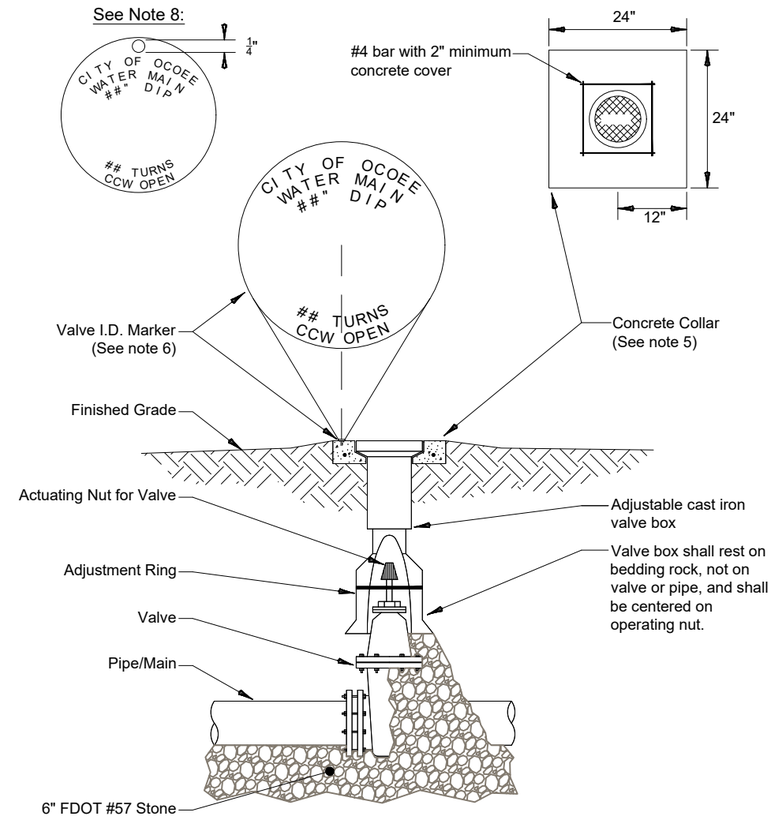

NOTES:

1. PVC extensions shall not be used on valve box.
2. The actuating nut for valves shall be no deeper than 24" from ultimate finished grade.
3. Valve assembly shall include center spacing guide from the City's Approved Materials List.
4. Where valve nut is more than 36" below grade, valve assembly shall include an extension from the City's Approved Materials List.
5. Valve collar shall be 24" x 24" x 6" square pad and concrete for collar shall be fc' of 3,000 psi minimum @ 28 days for non-pavement areas.
6. Valve Marker shall be from the City's Approved Materials List and shall include "City of Ocoee", main type, size, material, turns to open or close valve, and direction of rotation.
7. Valve Box shall not be located in pavement, sidewalk, or driveway unless approved by the City. If approved, Contractor/Developer shall reach out to the Utilities Department on the location of the Valve Tags.
8. For Valve Box approved in pavement, a disk valve marker shall hang in the valve box anchored to the locating wire.

Valve Box and Cover Detail

June 2021 N.T.S. Ocoee UT009

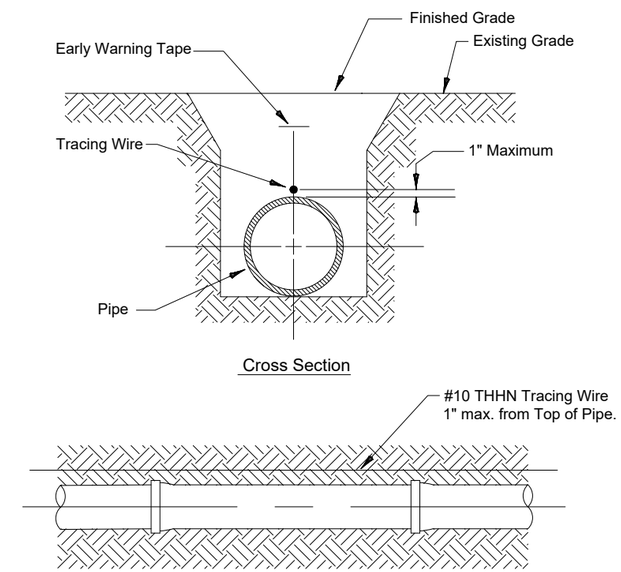

NOTES:

1. All pipe shall include the installation of #10 THHN copper tracing wire capable of detection by cable locating equipment.
2. Tracing wire shall be buried directly above the transverse centerline of the pipe.
3. End(s) of the locating wire shall be such that wire can be accessed by locating equipment assessing the wire in a valve vault or blow-off box. Wire is required to extend 12" minimum above finished grade.
4. Unless approved by the City, early warning tape indicating the type of pipe shall be required.
5. All directional drill pipe shall have locating wire attached to the top of pipe and shall remain on the top of the pipe during installation.
6. All service lines shall have locating wire placed on the pipe as described in City of Ocoee detail UT206 "Utility Service Connection"
7. All wire splices shall be completed with twist-on type wire nuts with gel or grease filled moisture seal.
8. All tracing wire installation shall be tested and verified for continuity by the contractor prior to final acceptance

Pipe Locating Wire Detail

April 2019 N.T.S. Ocoee UT010

No.	Date	Revision	By	No.	Date	Revision	By
1				1			
2				2			
3				3			
4				4			

BFA

BARNES, FERLAND AND ASSOCIATES, INC.
1230 HILLCREST ST., STE 100
ORLANDO, FL 32803
PH: (407) 896-8608
ENGINEERING REGISTRY NO. 6899

Designed by:	WET	Date: 10/19/2023
Drawn by:	JAB	Scale: AS NOTED
Checked by:	WET	
Approved by:	WET	
Job No.	2018-11A	©2023

Oakland Ave Phase 2
City of Ocoee, Florida

Plans Prepared By:
CPH, Inc.
500 W. Fulton St. Sanford, FL 32771
Ph: 407.322.6841
Licenses:
Eng. C.O.A. No. 3215 *Arch. Lic. No. AA26000926*
Survey L.B. No. 7143 *Landscp. Lic. No. LC0000298*

WILLIE E. THOMAS, P.E.
FL P.E. No. 57612

UTILITY CONSTRUCTION DETAILS

Sheet No.
U-6

Drawing name: F:\CIVIL\PROJECTS\2018\2018-11 CPH Ocoee Downtown Sheets Redev\2018-11 A Oakland Avenue\5.0 Drawings\2018-11 A Oakland PH 2 U-06.dwg Oct 19, 2023 - 10:14am jbish

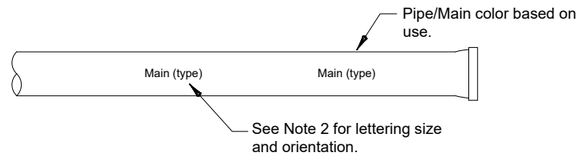

PIPE LETTERING NOTES:

1. Lettering shall be per the American Water Works Association.
2. Lettering shall be a minimum of 3/4" in height and shall be be facing up when the pipe is installed.
3. Lettering must be permanently imbedded into the pipe/main, not painted or stenciled.
4. Lettering shall be of contrasting color to pipe/main color.

Pipe Marking (Lettering)
N.T.S.

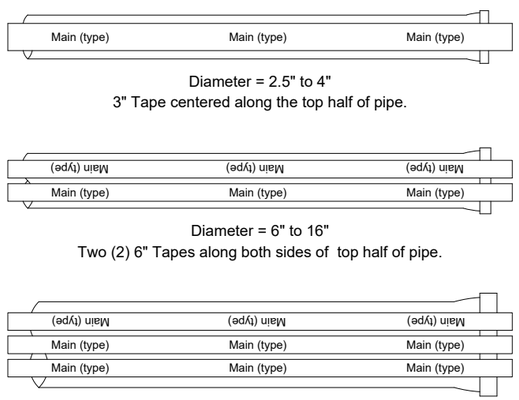

Warning Tape
N.T.S.

WARNING TAPE NOTES:

1. Tape color shall be in accordance with (same) as main/pipe color.
2. Tape lettering shall be at least 1" in height with no greater than 12" in spacing.
3. Warning tape shall extend total length of pipe.

Pipe Identification and Warning Tape Detail
April 2019 N.T.S. Ocoee UT011

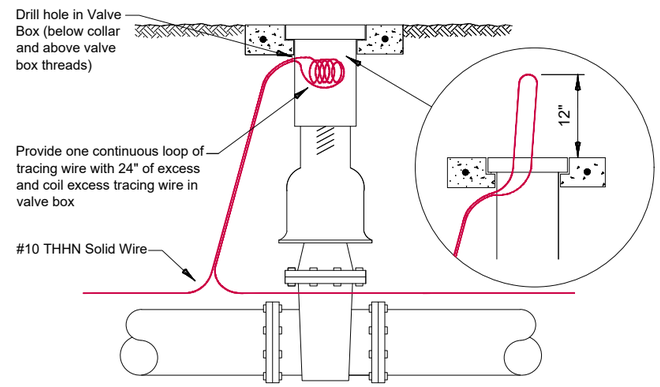

NOTES:

1. All pipe shall be installed with # 10 THHN solid copper tracing wire. Tracing wire must be installed directly above the pipe in a continuous circuit.
2. Tracing wire shall cover all main, pipe, branches (including fire hydrants) and service connections.
3. Tracing wire shall extend a minimum of 12" above grade at required intervals and/or valve lids.
4. Tracing wire shall be coiled and placed in a valve box and shall be easily accessible.
5. At dead ends of mains, pipe, and/or service, the tracing wire shall be placed in a properly identified cast iron valve box (Valve Box and Cover Detail UT009).

Tracing Wire Location Detail
April 2019 N.T.S. Ocoee UT012

Pipes/Mains Separation Requirement Table (See Note 11 for Structural)									
	Potable		Reclaimed		Sanitary Sewer		Storm Sewer		Structural
	Horiz.	Vert.	Horiz.	Vert.	Horiz.	Vert.	Horiz.	Vert.	Horiz.
Potable			3'	12"	10'	18"	3'	18"	10'
Reclaimed	3'	12"			3'	12"	3'	12"	10'
Sanitary Sewer	10'	18"	3'	12"			3'	12"	10'
Storm Sewer	3'	18"	3'	12"	3'	12"			10'

Joint Spacing Requirement Table (See Note 2)							
	Potable		Reclaimed	Sanitary Sewer	Storm Sewer		
Potable			3'	6'	3'		

NOTES:

1. The table above represents the minimum separation requirements as described in the City's Engineering Standards Manual. The most stringent requirements between the City's Standards and the guidelines set forth in the Florida Administrative Code 62-555.314 (F.A.C). shall apply between newly proposed utility lines and existing or proposed utility lines.
2. Joint spacing shall be based on one full length water main pipe centered above or below other pipes. The joint shall be no less than the required distance from the center of the crossing of the two pipes. (The water pipe shall be above the other pipe unless otherwise approved by the City.)
3. Where the City's minimum vertical and horizontal separation from potable water cannot be achieved from the outside of the potable water pipe and the outside of the other pipe/main, preferred separation in accordance with F.D.E.P. rules of the Florida Administrative Code 62-555.314 (F.A.C.) and 62-604.400 (F.A.C.) may be allowed upon approval by the City's Utilities Department.
   a. If it is not technically feasible or economically sensible to comply with the requirements set forth in 62-555.314 (F.A.C.), technical or economic justification for each exception must be submitted to F.D.E.P. with alternative construction features. Proof of F.D.E.P.'s approval for exceptions shall be submitted to the City.
4. For the purpose of this table, reclaimed water shall mean unrestricted public access reuse water as defined by F.A.C. 62-610. Other types of reclaimed water, not treated to public contact levels, shall be considered raw sewage, and the separation list for sanitary sewer shall apply.
5. Alternative water, such as storm water used for irrigation, shall be considered reclaimed water for separation requirements.
6. Pipe separation distance provided above shall mean the horizontal and/or vertical distance measured for the outside dimension of each pipe/main.
7. All Sanitary and Storm Structures shall follow separation requirements above.
8. Potable water pipes shall be laid above all pipes conveying raw sewage whenever they cross.
9. All utilities shall be installed with 36" of cover over the top of pipe. Cover shall be measured with current or future grading to ensure the 36" coverage.
10. No potable water pipe may pass through a sanitary sewer structure. Penetration through storm sewer must be approved by the City and is subject to special conditions and materials.
11. Structural shall refer to foundations, walls, etc. Additional separation shall be required by the City for construction of, including, but not limited to: live loads, multi-story commercial buildings, superstructures, embankments, retaining walls, bridges, railroads, high voltage transmission mains, gas mains, etc.

Pipes/Mains Separation Requirement Table
November 2022 N.T.S. Ocoee UT013

No.	Date	Revision	By	No.	Date	Revision	By
1				1			
2				2			
3				3			
4				4			

BFA
BARNES, FERLAND AND ASSOCIATES, INC.
1230 HILLCREST ST., STE 100
ORLANDO, FL 32803
PH: (407) 896-8608
ENGINEERING REGISTRY NO. 6899

Designed by:	WET	Date: 10/19/2023
Drawn by:	JAB	Scale: AS NOTED
Checked by:	WET	
Approved by:	WET	
Job No.	2018-11A	©2023

Oakland Ave Phase 2
City of Ocoee, Florida

Plans Prepared By:
CPH, Inc.
500 W. Fulton St. Sanford, FL 32771
Ph: 407.322.6841
Licenses:
Eng. C.O.A. No. 3215 *Arch. Lic. No. AA2600926*
Survey L.B. No. 7143 *Landscp. Lic. No. LC0000298*

WILLIE E. THOMAS, P.E.
FL P.E. No. 57612

UTILITY CONSTRUCTION DETAILS

Sheet No.
U-7

Drawing name: F:\CIVIL\PROJECTS\2018\2018-11 CPH Ocoee Downtown Sheets Redev\2018-11 A Oakland Avenue\5 O Drawings\2018-11 A Oakland PH 2 U-07.dwg Oct 19, 2023 - 10:14am jbish

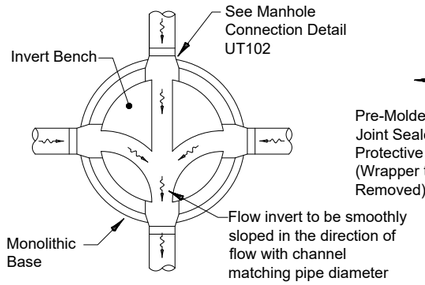

Invert Section

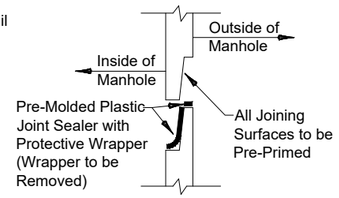

Wall Joint Section

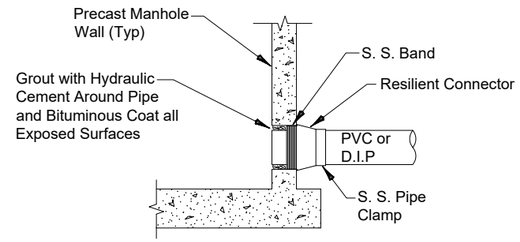

Pipe Connection for Pipes Less Than 24" Section

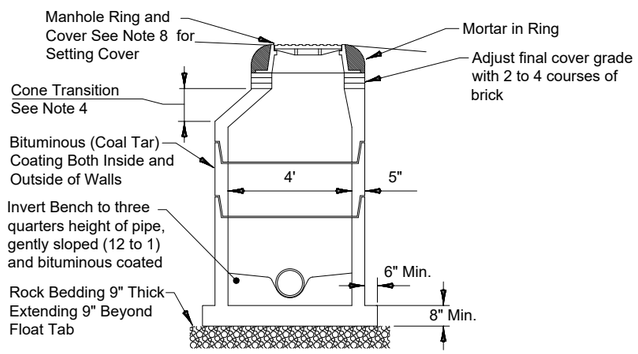

Manhole Section

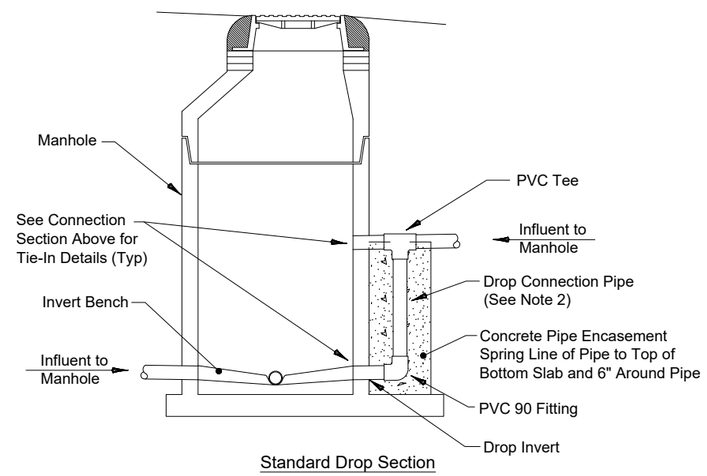

Standard Drop Section

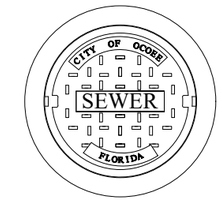

Cover

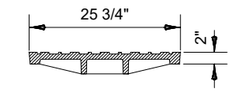

Cover Section
USF 45-1 Cover

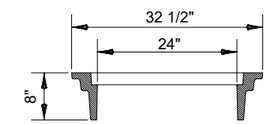

Flush Ring Section
USF 1295 Ring

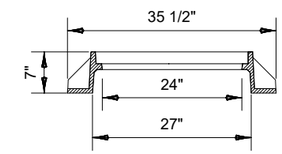

Ring Section
USF 227 Ring

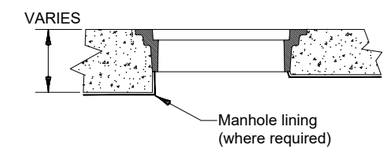

Flush Casting Mount

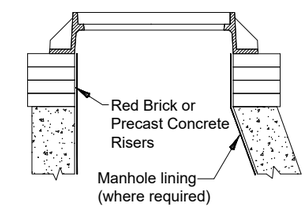

Standard Casting Mount

NOTES:

1. This detail is for pre-cast standard and receiving sanitary sewer manholes.
2. Sewer main sizes connecting to the manhole shall range from 6" to 24" in diameter and not less than 2" from floor of bottom casting. All other sizes shall require separate design and approval.
3. All manholes where any invert into the manhole exceeds 18" shall require a drop connection (See detail UT102).
4. Manhole cone/ring and cover shall be eccentric configured. Cone transition shall range from 18" to 36". Concentric configuration shall require written approval by the City.
5. Receiving, forcemain connected and drop manhole shall be continuously lined with an approved liner on the City of Ocoee's Approved Materials List at a minimum of 90 mil thickness.
6. Bottom casting shall be monolithic with first riser.
7. Riser between top cone and bottom casting shall be no shorter in height than 60".
8. Manhole cover to be set 1/4" above and matching slope pavement and should be set at plan grade unpaved areas.
9. All seams from structure joints, pipe connections and ring shall be WrapidSealed.

SANITARY SEWER MANHOLE DETAIL
July 2019 N.T.S. Ocoee UT101

NOTES:

1. For manhole covers, see UT103 Standard Manhole Ring and Cover Detail and UT104 Large & Receiving Manhole Ring and Double Cover Detail.
2. Drop pipe and fittings shall be of equal size and material to the influent sewer line.
3. The drop connection provided above is limited to pipe size less than 24". Alternative design must be approved by City for pipe sizes equal or greater than 24" in diameter.
4. An outside drop connection is required for all influent lines 18" or more above the manhole inverts.
5. Bottom elevation of drop shall be 0.1' above effluent invert.

SANITARY SEWER CONNECTION DETAIL
July 2019 N.T.S. Ocoee UT102

NOTES:

1. Use Ring & Covers Detail as depicted on this sheet for standard manhole applications. Refer to UT104 Large & Receiving Ring and Double Cover Detail for large (6' or greater) and receiving manholes.
2. For structures with top elevation at surface, use "Flush Structure Casting", USF 1295 Ring.
3. Brick shall be solid red (clay) brick meeting AASHTO M114 -Grade MW.
4. Red Brick or Precast Concrete Risers should not exceed four levels.
5. Manhole lid shall be Lettered with "City of Ocoee" (top), Sewer (center) and Florida (bottom).
6. Manhole lids shall have two (2) non-pentrating pick holes.
7. Where manhole lining (coating) is required, coating shall extend to ring sealing and coating ring's mortar bed.

Standard Manhole Ring and Cover Detail
April 2019 N.T.S. Ocoee UT103

No.	Date	Revision	By	No.	Date	Revision	By
1				1			
2				2			
3				3			
4				4			

BFA
BARNES, FERLAND AND ASSOCIATES, INC.
1230 HILLCREST ST., STE 100
ORLANDO, FL 32803
PH: (407) 896-8608
ENGINEERING REGISTRY NO. 6899

Designed by:	WET	Date: 10/19/2023
Drawn by:	JAB	Scale: AS NOTED
Checked by:	WET	
Approved by:	WET	
Job No.	2018-11A	©2023

Oakland Ave Phase 2
City of Ocoee, Florida

Plans Prepared By:
CPH, Inc.
500 W. Fulton St. Sanford, FL 32771
Ph: 407.322.6841
Licenses:
Eng. C.O.A. No. 3215 *Arch. Lic. No. AA2600926*
Survey L.B. No. 7143 *Landscp. Lic. No. LC0000298*

WILLIE E. THOMAS, P.E.
FL P.E. No. 57612

UTILITY CONSTRUCTION DETAILS

Sheet No.
U-8

Drawing name: F:\OVIL\PRO_ECTS\2018\2018-11 CPH Ocoee Downtown Streets Redev\2018-11 A Oakland Avenue\5.0 Drawings\2018-11 A Oakland PH 2 U-08.dwg Oct 19, 2023 - 10:15am jbah

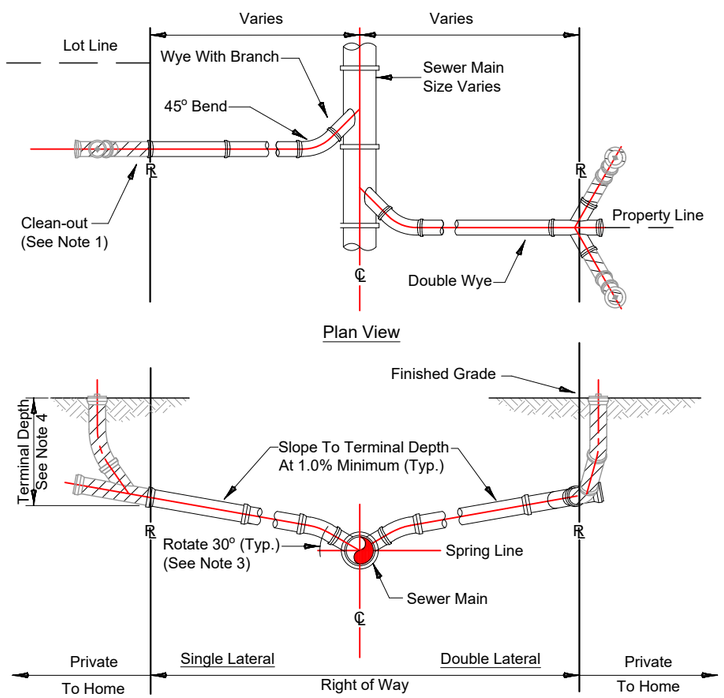

NOTES:

1. Clean-out (shown hatched) shall be installed by the builder in accordance with standard plumbing code.
2. Locate clean-outs as close to the property line as possible.
3. Invert of service lateral shall not enter sewer main below spring line.
4. The minimum terminal depth as required for house service is 3'.
5. Service Laterals shall be a minimum of 6" for non-residential scenarios. In residential areas, service laterals shall be a minimum of 4" to the right-of-way and then 6" to the sewer main.

Service Lateral Detail

April 2019 N.T.S. Ocoee UT105

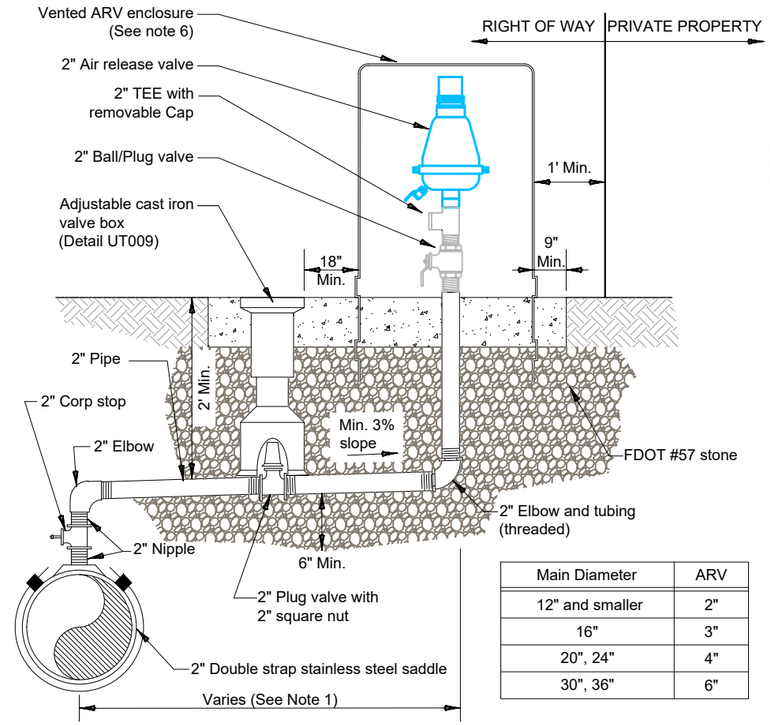

Main Diameter	ARV
12" and smaller	2"
16"	3"
20", 24"	4"
30", 36"	6"

NOTES:

1. Gas Release Valve shall mean Air, Combination Air/Vacuum, and Surge Protection Release Valve.
2. Offset distance to be field determined and as close to the right of way as possible and clear of pedestrian walkways. If pipe is at right of way line, no offset is required.
3. Above detail applies to a 2" ARV. For larger ARVs, pipe diameter and valves shall be equal to the size of the ARV.
4. All piping, valves and appurtenances to be brass or 316 Stainless Steel except where specified otherwise.
5. ARV shall have a Reinforced Nylon Body D-040 or Ductile Iron Body D-060 for Potable Water Systems. ARV shall be Reinforced Nylon Body D-021 or Ductile Iron Body D-060 for Reclaim Water Systems.
6. The enclosure shall follow the City's Approved Materials List or be an approved equal with temper proof locking device and vents must be capable of allowing at least the same amount of airflow as the valve.
7. Shop drawings for the ARV shall be submitted to the City for approval.
8. Any deviation from this detail shall be made known to the City for approval.

Gas Release Valve For Water/Reclaim

N.T.S. Ocoee UT204a

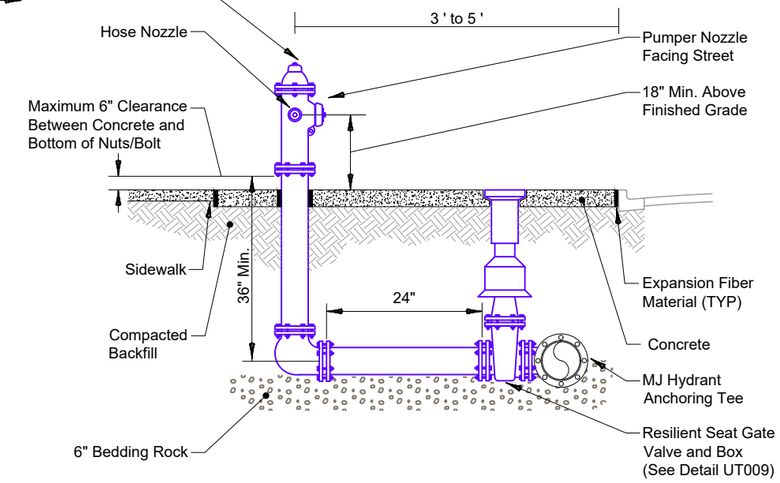

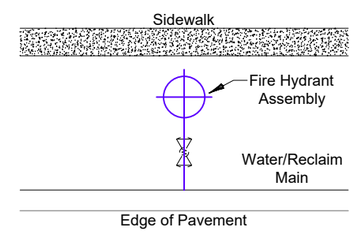

Standard Configuration

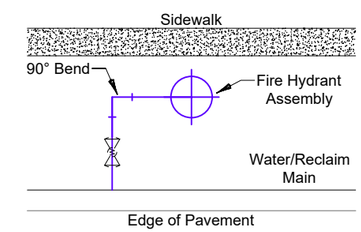

Alternate Configuration

Note:

1. Hydrants shall be painted with double coat enamel paint per the following:
   - Public Potable Water - Safety Yellow Pantone 13-0630TN
   - Reclaimed Water - Purple Pantone 522 C
   - Private Fire - Cherry Red HDC-MD-16
2. Concrete shear pad shall abut between sidewalk and curb. Where sidewalk is not present, concrete shear pad shall be approx. 7.5' x 3.5' min.
3. Concrete shall be 6" thick with fibermesh and shall be fc' of 3,000 psi minimum at 28 days.
4. Any deviation from this detail shall be made known to the City for approval.

Fire Hydrant Assembly Detail

June 2021 N.T.S. Ocoee UT201

No.	Date	Revision	By	No.	Date	Revision	By
1				1			
2				2			
3				3			
4				4			

BFA

BARNES, FERLAND AND ASSOCIATES, INC.
1230 HILLCREST ST., STE 100
ORLANDO, FL 32803
PH: (407) 896-8608
ENGINEERING REGISTRY NO. 6899

Designed by:	WET	Date: 10/19/2023
Drawn by:	JAB	Scale: AS NOTED
Checked by:	WET	
Approved by:	WET	
Job No.	2018-11A	©2023

Oakland Ave Phase 2
City of Ocoee, Florida

Plans Prepared By:
CPH, Inc.
500 W. Fulton St. Sanford, FL 32771
Ph: 407.322.6841
Licenses:
Eng. C.O.A. No. 3215 *Arch. Lic. No. AA26009926*
Survey L.B. No. 7143 *Landscp. Lic. No. LC0000298*

WILLIE E. THOMAS, P.E.
FL P.E. No. 57612

UTILITY CONSTRUCTION DETAILS

Sheet No.
U-9

Drawing name: F:\CIVIL\PROJECTS\2018\2018-11 CPH Ocoee Downtown Sheets Redev\2018-11 A Oakland Avenue\5 O Drawings\2018-11 A Oakland PH 2 U-09.dwg Oct 19, 2023 - 10:15am jbish

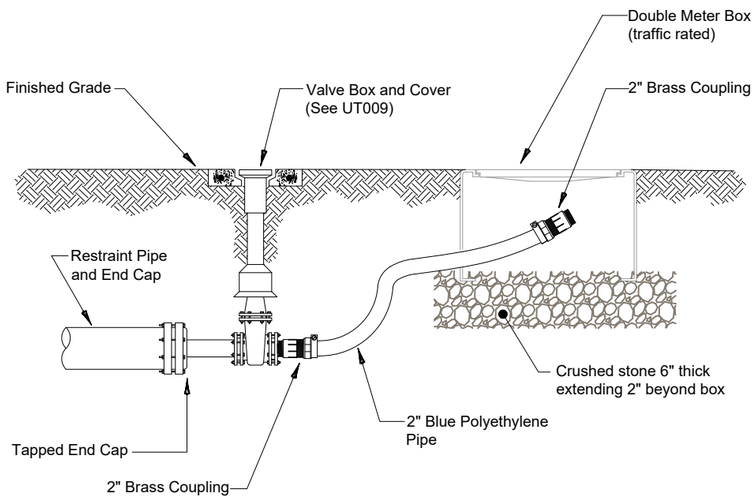

Cross Section

NOTES:

1. All pipes and fittings shall be schedule 40 brass or equivalent with threaded (NPT) joints except where denoted otherwise.
2. All pipe and fittings shall be in accordance with City Standards for the applicable service provided.
3. Pipe restraints shall be in accordance with City Standard Details UT004 for PVC/HDPE Pipe or UT005 for Ductile Iron Pipe.

Blowoff Assembly Detail

April 2019 N.T.S. Ocoee UT203

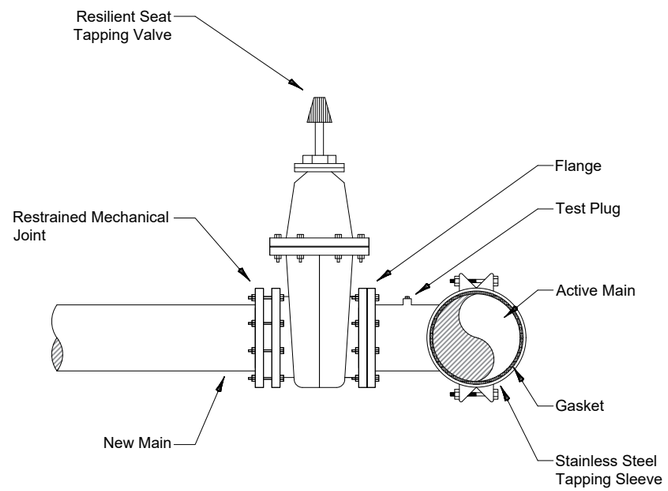

NOTES:

1. All Sleeves and Valves shall be water tested before tap.
2. No Wet Tap on Asbestos Cement water mains.
3. For Valve Box and Cover, see Ocoee UT009 Valve Box and Cover Detail.

Stainless Steel Tapping Sleeve and Gate Valve for Water and Reclaim

Feb. 2020 N.T.S. Ocoee UT205

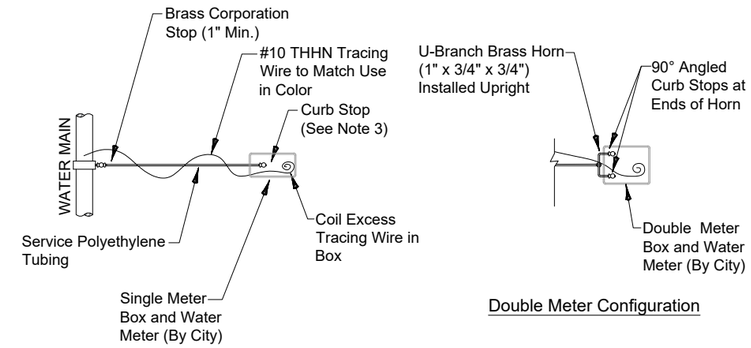

Double Meter Configuration

Service View with Single Meter

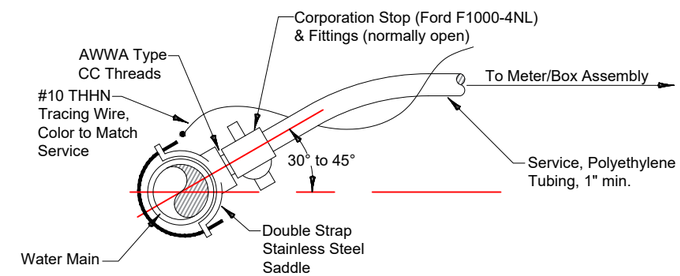

Tapping Section

NOTES:

1. All fittings shall be brass with compression-pack joint type connections.
2. No service line shall extend or terminate under a driveway.
3. Meter end of service shall terminate with curb stop (90°) for single service and dual horn and curb stops (90°)for dual services.
4. Meter end of service shall terminate 3' past meter location where service shall, unless directed otherwise, extend 3' above finished grade tied to a 2" x 4" x 4' stake. If directed, service connection shall be buried and located with an 2" x 4" x 4' painted marker. Stake or marker shall indicate lot(s) to be served.
5. Concrete curb shall be marked (stamped or saw-cut) with "W" locating service.
6. Service connection to the main shall use approved saddle, and tapping of main shall be by a method where a solid coupon is removed.
7. Services installed under finished or existing pavement shall be directionally drilled.
8. Upon approval, direct tap (no saddle) may be used on Ductile Iron Pipe.
9. Service color shall be blue for potable water and purple (magenta) for reclaimed water.

Utility (Water & Reclaim) Service Connection Detail

Sep. 2019 N.T.S. Ocoee UT206

No.	Date	Revision	By	No.	Date	Revision	By
1				1			
2				2			
3				3			
4				4			

BFA

BARNES, FERLAND AND ASSOCIATES, INC.
1230 HILLCREST ST., STE 100
ORLANDO, FL 32803
PH: (407) 896-8608
ENGINEERING REGISTRY NO. 6899

Designed by:	WET	Date: 10/19/2023
Drawn by:	JAB	Scale: AS NOTED
Checked by:	WET	
Approved by:	WET	
Job No.	2018-11A	©2023

Oakland Ave Phase 2
City of Ocoee, Florida

Plans Prepared By:
CPH, Inc.
500 W. Fulton St. Sanford, FL 32771
Ph: 407.322.6841
Licenses:
Eng. C.O.A. No. 3215 *Arch. Lic. No. AA26000926*
Survey L.B. No. 7143 *Landscp. Lic. No. LC0000298*

WILLIE E. THOMAS, P.E.
FL P.E. No. 57612

UTILITY CONSTRUCTION DETAILS

Sheet No.
U-10

Drawing name: F:\CIVIL\PROJECTS\2018\2018-11 CPH Ocoee Downtown Streets Redev\2018-11 A Oakland Avenue\5.0 Drawings\2018-11 A Oakland PH 2 U-10.dwg Oct 19, 2023 - 10:15am jbah

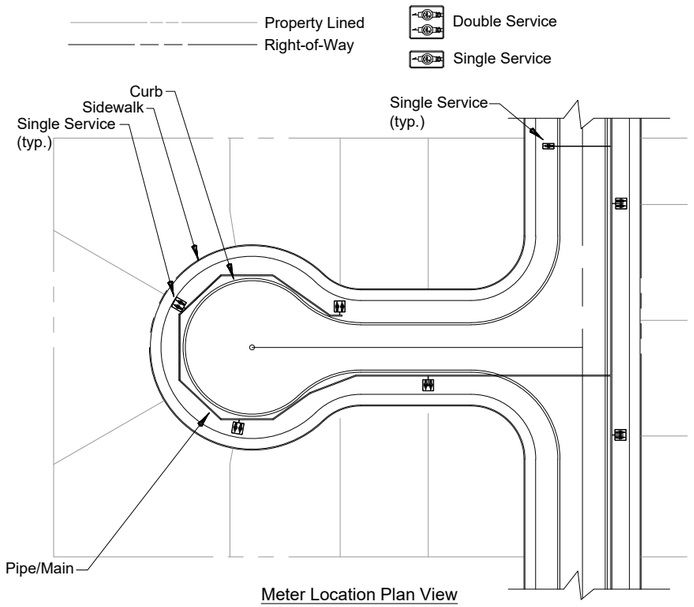

Meter Location Plan View

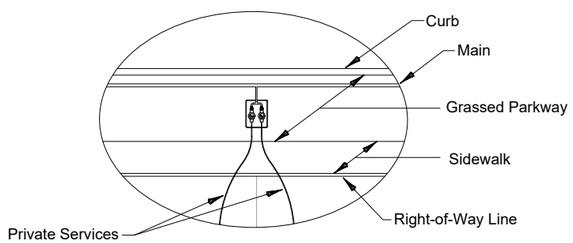

Typical Meter Layout

NOTES:

1. Pipes/mains in this detail are for representation purposes only. Refer to plan or utility sheets for pipes/main material, size, and configuration.
2. For meter configuration, including fittings and box, see City of Ocoee Meter and Meter Box Details UT207 for Single Family and UT208 for Commercial/Multi-Family.
3. Unless directed by City, reclaimed and potable meter boxes shall be separated by placing the boxes at opposite property lines.
4. Meters should be centered in grassed parkway, if possible, offset from front of sidewalk 2', and such that private service will not cross adjacent lot.

Meter & Service Location Detail

April 2019 N.T.S. Ocoee UT207

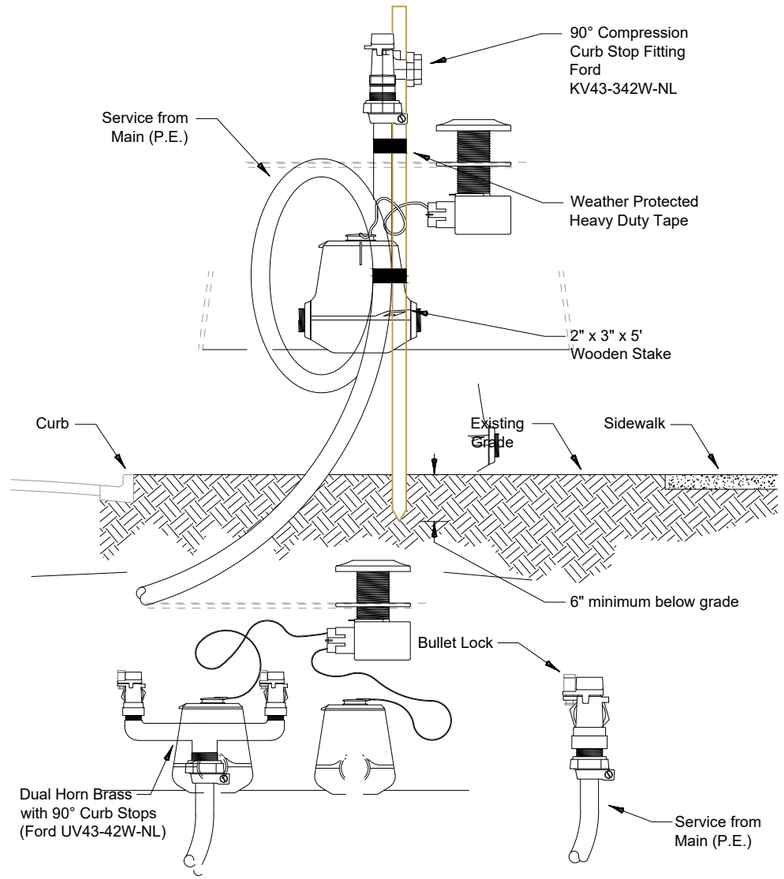

Double Meter Curb Stop

Single Meter Curb Stop

NOTES:

1. Water Service shall be 1" diameter P.E. minimum.
2. Service curb stop shall be bullet locked using High Field Manufacturing Cap Seal # 93210130, Bullet Stud 93210140 and Base 93210120.
3. Service shall extend 4' above finished grade and shall be no more than 2' from back of curb.
4. Top of stake shall be painted the color of the Utility Service and labeled with the Lot Number(s)/Address(es) it serves.
5. When water service will be used for Bacteriological Testing, a hose bib shall be installed on the Curb Stop.
6. Meter shall be installed by the City unless authorization has been given by the City (UT208b)
7. Private connection to the meter shall be the responsibility of the Owner/Owner's Contractor.

Single Family Residential Service Detail

June 2021 N.T.S. Ocoee UT208a

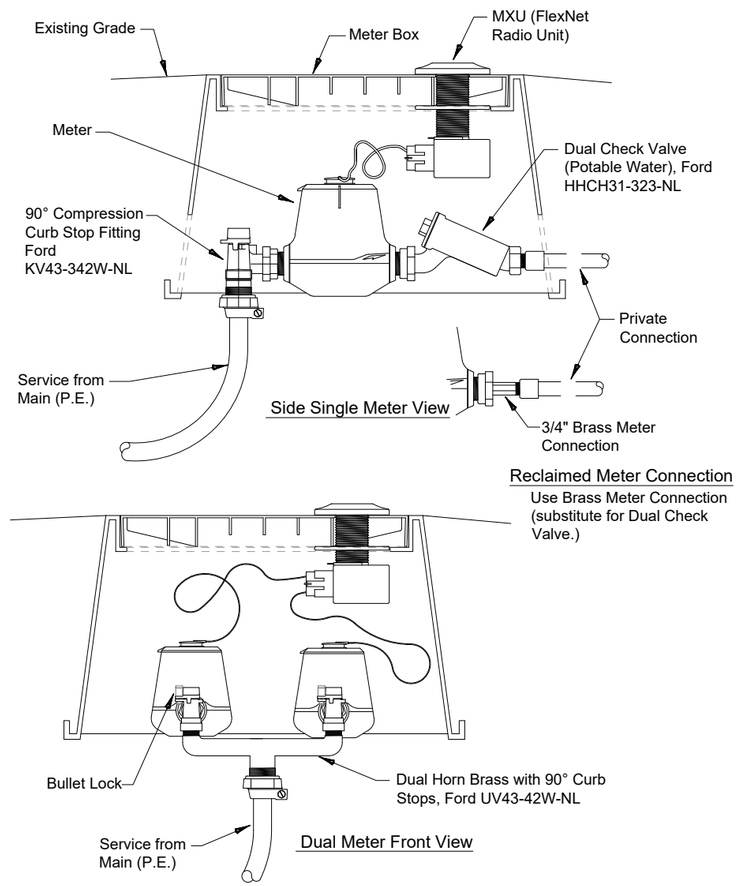

Side Single Meter View

Reclaimed Meter Connection

Use Brass Meter Connection (substitute for Dual Check Valve.)

Dual Meter Front View

NOTES:

1. This detail shall only be used when the Contractor/Developer has been given special permission by the City to place City Meters.
2. Water Service shall be 1" diameter P.E. minimum.
3. Service curb stop shall be bullet locked using High Field Manufacturing Cap Seal # 93210130, Bullet Stud 93210140 and Base 93210120.
4. Private connection to the meter shall be the responsibility of the Owner/Owner's Contractor.

Single Family Residence Meter Configuration Detail

February 2021 N.T.S. Ocoee UT208b

No.	Date	Revision	By	No.	Date	Revision	By
1				1			
2				2			
3				3			
4				4			

BFA

BARNES, FERLAND AND ASSOCIATES, INC.
1230 HILLCREST ST., STE 100
ORLANDO, FL 32803
PH: (407) 896-8608
ENGINEERING REGISTRY NO. 6899

Designed by:	WET	Date: 10/19/2023
Drawn by:	JAB	Scale: AS NOTED
Checked by:	WET	
Approved by:	WET	
Job No.	2018-11A	©2023

Oakland Ave Phase 2
City of Ocoee, Florida

Plans Prepared By:
CPH, Inc.
500 W. Fulton St. Sanford, FL 32771
Ph: 407.322.6841
Licenses:
Eng. C.O.A. No. 3215 *Arch. Lic. No. AA26000926*
Survey L.B. No. 7143 *Landscp. Lic. No. LC0000298*

WILLIE E. THOMAS, P.E.
FL P.E. No. 57612

UTILITY CONSTRUCTION DETAILS

Sheet No.
U-11

Drawing name: F:\CIVIL\PROJECTS\2018\2018-11 CPH Ocoee Downtown Streets Redev\2018-11 A Oakland Avenue\5.0 Drawings\2018-11 A Oakland PH 2 U-11.dwg Oct 19, 2023 - 10:15am jhish

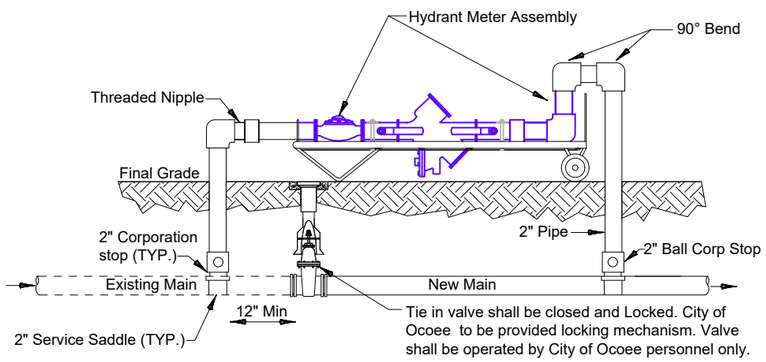

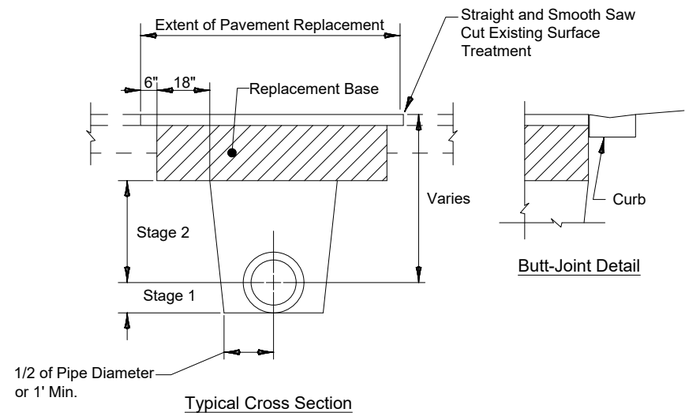

Typical Cross Section

NOTES:

1. Provide temporary pipe supports as required.
2. Do not use galvanized pipe or accessories. Polyethylene pipe can be used with approval by the City
3. A temporary jumper connection is required at all connections between existing active water mains and proposed new water main improvements.
4. The detail shown is to be used for filling any new water main of any size from existing active water mains and for flushing of new mains up to 8" diameter (2.5 fps min velocity) and for pulling bacteriological samples from any new water main of any size.
5. The jumper connection shall be maintained until after filling, flushing, testing, and disinfection of the new main has been successfully completed; and clearance for use from Florida Department of Environmental Protection (FDEP) and other pertinent agencies has been received.
6. Pipe and fittings used for connection of the new pipe to the existing pipe shall be disinfected prior to installation in accordance with AWWA C651, 2014 edition.
7. Swab or spray the exterior of the main to be tapped and the tapping saddle with 1% Hypochlorite solution.
8. The contractor shall reach out to the City to rent a City Hydrant Meter Assembly.
9. All installation and maintenance of the temporary jumper connection and associated hydrant meter assembly, fittings and valves, etc., shall be the responsibility of the contractor.

Temporary Jumper Connection

March 2020 N.T.S. Ocoee UT211

Stage Compactions:

1. Backfilling of trench shall be in six inch (6") maximum lifts.
2. Stage 1: Backfilling trench in Stage 1 shall use proper mechanical equipment to insure proper compaction throughout, including pipe haunches.
3. Stage 2: Backfilling trench in Stage 2 shall be to bottom of sub-grade.

NOTES:

1. All work and material for the Flexible Pavement Reconstruction shall be in accordance with the most current City of Ocoee - Engineering Standards Manual (available at OCOEE.ORG).
2. Any conflict between ESM specification and this sheet's specifications shall be resolved by the more stringent requirement.
3. Replacement asphalt shall match the existing structural and friction courses for type and thickness in accordance with requirements as set forth by the ESM.
4. Replacement asphalt shall be installed the to the full width of the travel lane.
5. Backfill and base material shall be clean and homogenous compacted to 98% of the maximum density per AASHTO T-180. Tack shall be added to the new base material prior to installing the replacement asphalt.
6. Base course shall be prepared in 6" lifts maximum, and thoroughly compacted.
7. Where trench line abuts existing curb(s), construct clean butt joint with curb. In the event curb is undermined and/or compromised, curb shall be replaced.

Open Cut- Flexible Pavement Replacement Detail

July 2022 N.T.S. Ocoee PW002

No.	Date	Revision	By	No.	Date	Revision	By
1				1			
2				2			
3				3			
4				4			

BFA

BARNES, FERLAND AND ASSOCIATES, INC.
1230 HILLCREST ST., STE 100
ORLANDO, FL 32803
PH: (407) 896-8608
ENGINEERING REGISTRY NO. 6899

Designed by:	WET	Date: 10/19/2023
Drawn by:	JAB	Scale: AS NOTED
Checked by:	WET	
Approved by:	WET	
Job No.	2018-11A	©2023

Oakland Ave Phase 2
City of Ocoee, Florida

Plans Prepared By:
CPH, Inc.
500 W. Fulton St. Sanford, FL 32771
Plc 407.322.6841
Licenses:
Eng. C.O.A. No. 3215 *Arch. Lic. No. AA26000926*
Survey L.B. No. 7143 *Landscp. Lic. No. LC0000298*

WILLIE E. THOMAS, P.E.
FL P.E. No. 57612

UTILITY CONSTRUCTION DETAILS

Sheet No.
U-12

Drawing name: F:\CIVIL\PROJECTS\2018\2018-11 CPH Ocoee Downtown Streets Redev\2018-11 A Oakland Avenue\5.0 Drawings\2018-11 A Oakland PH 2 U-12.dwg Oct 19, 2023 - 10:15am jbish

Mayor
Rusty Johnson

City Manager
Robert Frank

Commissioners
Scott R. Kennedy, District 1
Rosemary Wilsen, District 2
Richard Firstner, District 3
Ages Hart, District 4

November 9, 2023

ADDENDUM NO. ONE (1)
CITY OF OCOEE
ITB No. 24-002
W. OAKLAND AVE RECONSTRUCTION

This addendum shall modify and become a part of the original bid documents for the W. Oakland Ave Reconstruction Projects for FY 2024. This addendum consists of one (1) page. Bidders shall acknowledge receipt of this Addendum in the space provided on page 00300-1 of the bid documents (section 3000 - Bid Form). Failure to do so may subject the bidder to disqualification. **The bid date remains the same.**

Answers to questions received and/or amendments to the bid documents are as follows:

Prohibition Against Considering Social, Political or Ideological Interests in Government Contracting: Bidders are hereby notified of the provisions of section 287.05701, Florida Statutes, as amended, that the City will not request documentation of or consider a Bidder's social, political, or ideological interests when determining if the Bidder is a responsible Bidder. Bidders are further notified that the City's governing body may not give preference to a Bidder based on the Bidder's social, political, or ideological interests.

Q1. What are the number of days for Substantial and Final Completion?

A1. The Substantial work shall be complete within 450 calendar days, the final work shall be complete within 510 calendar days.

Olena Stokych

Olena Stokych
Purchasing Analyst
Cc: Milen Womack, City Engineer

Mayor
Rusty Johnson

City Manager
Robert Frank

Commissioners
Scott R. Kennedy, District 1
Rosemary Wilsen, District 2
Richard Firstner, District 3
Ages Hart, District 4

November 29, 2023

ADDENDUM NO. TWO (2)
CITY OF OCOEE
ITB No. 24-002
W. OAKLAND AVE RECONSTRUCTION

This addendum shall modify and become a part of the original bid documents for the W. Oakland Ave Reconstruction Projects for FY 2024. This addendum consists of three (3) pages. Bidders shall acknowledge receipt of this Addendum in the space provided on page 00300-1 of the bid documents (section 3000 - Bid Form). Failure to do so may subject the bidder to disqualification. **The bid date remains the same.**

Answers to questions received and/or amendments to the bid documents are as follows:

Q1: Please confirm the value of the liquidated damages:
- It appears section 00500 (3.3) states $ 200 / $ 250.
- Article 9.2 References FDOT Specification 2004 Edition.

A1: The liquidated damages will be as stated in Article 3.3 of Section 00500.

Q2: Please clarify what this structure is on page 14 of the plan set (heavy lined rectangle figure)? Is it the weigh scale that is a pay item that gets removed? Please clarify / detail the weigh scale assembly that is currently installed and where it is if it is not the rectangle figure and what needs to be removed and is the restoration just replacing brick pavers or paving over the disturbed area?

A2: The existing weigh scale to be removed is identified on sheet 9 of the plans. The description and instructions to contractors for the weigh scale removal can be found in the Measurement section. The structure indicated in the question is structure S-112 which is listed in the structure table on sheet 6 of the plans.

Q3: Are you providing an excel spreadsheet where we enter our unit prices either inside of the Bonfire application or as a separate file once completed that gets uploaded to the Bonfire application?

A3: No, please use the Bid Form that was provided in the solicitation.

Q4: Is the bid form available in excel?

A4: No.

Q5: Has Duke Energy completed the design for moving the existing 15-20 power poles currently located in the R/W of Oakland Ave and Taylor St?

A5: Duke Energy has completed design for moving the existing power poles and are working on a scheduled date for removal/relocation.

Q6: Please clarify the location of where the 1500' of 6" PVC pipe for Duke Energy is to be installed? Is it along the roadway R/W or is it located at several road crossings connecting the North R/W to the South R/W?

A6: Routing for the 6" Duke Energy conduit is shown on the "Duke Energy Conduit Plan". Precise location of the line will be coordinated in the field between City, Duke Energy, and contractor.

Q7: Please clarify the work to be done on Taylor St. Are we to mill from the C/L on Taylor to the West shoulder and reconstruct the part of Taylor St from the C/L on Taylor to the East shoulder? The detail on page 3 and the plan sheet 19 show only the East side of Taylor St having the milling and reconstruction work done and doing no work on the West side of Taylor St.

A7: The limits of milling, resurfacing, and roadway restoration for Taylor St are most clearly shown on Sheet 19 of the plans. Milling and resurfacing covers the northbound lane of Taylor St with complete reconstruction in areas affected by the stormwater installation.

Q8: Can the City clarify if the weigh scale is to be removed and demolished?

A8: The weigh scale needs to be removed and the area restored. Further details of the weigh scale removal can be found in the Measurement section of the bid documents.

Q9: Can the City provide more information or detail of the restoration to be done after the weigh scale is removed?

A9: Pedestrian Ingress and Egress to the business at 211 W Oakland needs to be provided once the scale is removed with areas disturbed to be resodded. Contractor must visit the site to review the weigh scale.

Q10: Can the City provide more information on the In-Situ Infiltrometer or a contracting supplier?

A10: A detail for the In-Situ Infiltrometer is provided on sheet 23 of the plans.

Q11: Does the City have a preferred supplier for the decorative benches?

A11: The City does not have a preferred supplier for the decorative benches. Benches must conform to the detail provide on sheet H-5 of the plans.

Q12: Does the City have a local contractor that does their decorative walls and columns?

A12: The City does not have a separate contractor for walls and columns.

Q13: Will the City provide the cast stone medallion?

A13: This shall be the responsibility of the Contractor.

Q14: Is Duke Energy providing the conduit?

A14: The conduit is to be provided by the Contractor. Further detail of the 6" PVC Schedule 40 Conduit F&I can be found in the Measurement section of the bid documents.

Q15: If the Contractor is required to provide the conduit, are there specs or an EMS available?

A15: Conduit specs are provided in the Customer Guide for Installing Conduit.

Q16: Is the work around the railroad tracks going to be monitored by the railroad system?

A16: The Contractor will have to coordinate with Florida Central Railroad for work around the railroad tracks.

Q17: Is railroad insurance required? Are railroad flaggers required?

A17: See previous answer.

Q18: Will the 6" trail paving have a special surface texture or be picture framed around the edges?

A18: No special finish or picture framing is required.

Q19: Does the 6" trail paving get a compacted base or stabilized Subgrade?

A19: Refer to Engineering Standards Manual Article 19 for compaction requirements.

Q20: Does the trail concrete get welded wire mesh or fiber mesh added to the concrete mix?

A20: All 6" concrete shall have fiber mesh added.

Olena Stokych

Olena Stokych
Purchasing Analyst
Cc: Milen Womack, City Engineer

Mayor
Rusty Johnson

City Manager
Robert Frank

Commissioners
Scott R. Kennedy, District 1
Rosemary Wilsen, District 2
Richard Firstner, District 3
Ages Hart, District 4

November 30, 2023

ADDENDUM NO. THREE (3)
CITY OF OCOEE
ITB No. 24-002
W. OAKLAND AVE RECONSTRUCTION

This addendum shall modify and become a part of the original bid documents for the W. Oakland Ave Reconstruction Projects for FY 2024. This addendum consists of one (1) page. Bidders shall acknowledge receipt of this Addendum in the space provided on page 00300-1 of the bid documents (section 3000 - Bid Form). Failure to do so may subject the bidder to disqualification. **The bid date remains the same.**

Answers to questions received and/or amendments to the bid documents are as follows:

Q1: Can the existing waterline that is shown to be removed once the new pipe is installed be grout filled with concrete and left in place if it is located under the existing asphalt on Oakland Ave and Taylor St?

A1: No, the line must be removed per the plans.

Olena Stokych

Olena Stokych
Purchasing Analyst
Cc: Milen Womack, City Engineer

STAFF REPORT

Meeting Date: January 16, 2024
Item #: 9

Contact Name: Stephen Krug
Contact Number: Ext. 6002

Department Director: Stephen Krug
City Manager: Robert Frank

Subject: Approval of 2023-2024 Budget Vehicle and Equipment Purchases. (Public Works Director Krug)

Background Summary: The City traditionally purchases vehicles through various competitively bid annual contracts. Public Works has researched pricing and has found the Sourcewell (National Auto Fleet Group) contract provides the lowest competitively bid pricing for vehicles utilizing competitively bid contracts. The following vehicle is incorporated into the approved budget for purchase through these contracts:

- 1 - Ford Transit T-350 Wagon @ $54,932 (Recreation - New).

The approved budget includes the following equipment items, priced through the Florida Sheriff's Association bid contract:

- 1 - JLG X600AJ Compact Crawler Boom Lift @ $162,490 (Facilities - New).

In addition to the above vehicle and equipment, the Commission approved Public Works to acquire a replacement concrete truck within the 23/24 budget. Attached is the description and quote for the below proposed concrete truck:

- 1 - Ford F-550 with mounted 2-yard Ernest Short Stop Mixer @ $119,235 (Streets - Replacement).

This is a specialty built item that allows Public Works to pick up small loads of concrete directly from the batch plant to be hauled to our repair projects within city neighborhoods and work sites. It will replace the 17-year-old Portamix 202 portable towed concrete mixer that was acquired in 2007 and has reached the end of its useful service life. Public Works has searched for companies that provide a truck with a similar configuration. However, Rush Truck Center is the only vendor offering a single-source turn-key product. Other companies offer a separate concrete mixer body option at a higher cost when combined with a separately purchased truck chassis. There is also not a current bid we can piggyback onto for this type of equipment already mounted onto the vehicle.

Public Works recommends approval to purchase the above vehicles and equipment based on published pricing for the 2023/2024 term contracts from Sourcewell and the Florida Sheriff's Association. Public Works also recommends approval to purchase the concrete truck described above.

Issue:
Should the Honorable Mayor and City Commissioners approve the acquisition of the budgeted 2023/2024 equipment and outright vehicle purchases?

Recommendations:
Staff recommends the Honorable Mayor and City Commissioners approve the acquisition of the above vehicle and equipment from the Sourcewell and Florida Sheriff's Association contracts, the acquisition of the above concrete truck, and authorize the City Manager and staff to approve changes to the vehicle and equipment orders up to the limit of his purchasing authority and up to the budget amount for any change order.

Attachments:
1. Ford T-350 Quote
2. JLG Compact Lift Quote
3. Concrete Truck Quote

Financial Impacts:
The vehicles and equipment are adequately funded in the 2023/2024 Department budgets.

Type of Item: Consent

ALAN JAY FLEET SALES

Sourcewell Formerly NJPA
Awarded Contract

Call Us first, for all of your Fleet Automotive, & Light Truck needs.

PHONE (800) ALANJAY (252-6529)		DIRECT 863-385-9610	WWW.ALANJAY.COM	Quote 49551-1
Corporate Office	2003 U.S. 27 South Sebring, FL 33870	MOBILE 904-838-4999 FAX 863-402-4221	Mailing Address	P.O. BOX 9200 Sebring, FL 33871-9200

ORIGINAL QUOTE DATE 10/23/2023

QUICK QUOTE SHEET

REVISED QUOTE DATE 10/23/2023

REQUESTING AGENCY **OCOEE, CITY OF**
CONTACT PERSON **KIEL GAJADHAR** EMAIL kgajadhar@OCOEE.ORG
PHONE **407-872-9104** MOBILE FAX

SOURCEWELL (FORMERLY NJPA) CONTRACT # 2024 091521-NAF & 06 **www.NationalAutoFleetGroup.com**

MODEL X2Y 301A 148 **MSRP** $53,955.00

2024 FORD TRANSIT T-350 WAGON XL LOW ROOF (12-PASS BASE) - RWD -

CUSTOMER ID **NJPA PRICE** **$51,989.00**

BED LENGTH	148" WB

*** All vehicles will be ordered white w/ darkest interior unless clearly stated otherwise on purchase order.*

FACTORY OPTIONS	DESCRIPTION	
YZ VK	Exterior color Oxford White with Dark Palazzo, Vinyl Front Bucket Seats .	$0.00
998 44U	3.5L PFDI V6 WITH 10-SPEED TRANSMISSION.	$0.00
153	FRONT LICENSE PLATE BRACKET	$0.00
53B	Heavy-Duty Trailer Tow Package	$484.00
68J	Extended Length Running Boards -inc: Covers A-B pillar driver-side and A-C pillar passenger-side	$654.00
86F	2 ADD'L KEYS with FOBS	$70.00
96P	15-PASSENGER SEATS	$1,490.00
BUC	FACTORY BACK UP CAMERA(STD).	$0.00
CPO	SEE ATTACHED PRINT OUT FOR COMPLETE VEHICLE DETAILS	$0.00
	FACTORY OPTIONS	**$2,698.00**

CONTRACT OPTIONS	DESCRIPTION	
NEW-TAG	New City tag Includes temp tag & two way overnight shipping for signature.(specify state, county, city, sheriff, etc.)	$245.00
	CONTRACT OPTIONS	**$245.00**

TRADE IN **TOTAL COST** **$54,932.00**

YES WE TAKE TRADE INS ~~~ ASK ABOUT MUNICIPAL FINANCING ~~~ $0.00

TOTAL COST LESS TRADE IN(S) **QTY** **1** **$54,932.00**

Estimated Annual payments for 60 months paid in advance: $12,302.51
Municipal finance for any essential use vehicle, requires lender approval, WAC.

Comments **QUOTE SUBJECT TO FACTORY ORDER ACCEPTANCE or 30 DAYS**

VEHICLE QUOTED BY **CHRISTY SELF** **GOVERNMENT ACCOUNT MANAGER** christy.self@alanjay.com

"I Want to be Your Fleet Provider"

I appreciate the opportunity to submit this quotation. Please review it carefully. If there are any errors or changes, please feel free to contact me at any time. I am always happy to be of assistance.

ALAN JAY FLEET
CHRISTY SELF | 863-385-9610 | CHRISTY.SELF@ALANJAY.COM

Vehicle: [Fleet] 2024 Ford Transit Passenger Wagon (X2Y) T-350 148" Low Roof XL RWD (✔ Complete)

Note:Photo may not represent exact vehicle or selected equipment.

Window Sticker

SUMMARY

[Fleet] 2024 Ford Transit Passenger Wagon (X2Y) T-350 148" Low Roof XL RWD — MSRP:$53,145.00

Interior:Dark Palazzo Gray, Vinyl Front Bucket Seats

Exterior 1:Oxford White

Exterior 2:No color has been selected.

Engine: 3.5L PFDi V6 Flex-Fuel

Transmission: 10-Spd Automatic w/OD & SelectShift

OPTIONS

CODE	MODEL	MSRP
X2Y	[Fleet] 2024 Ford Transit Passenger Wagon (X2Y) T-350 148" Low Roof XL RWD	$53,145.00
	OPTIONS	
153	Front License Plate Bracket	$0.00
21G	Dark Palazzo Gray Vinyl Bucket Seats	$0.00
301A	Order Code 301A	$0.00
44U	Transmission: 10-Spd Automatic w/OD & SelectShift	$0.00
53B	Heavy-Duty Trailer Tow Package	$485.00
68J	Extended Length Running Boards	$655.00
86F	2 Additional Keys (4 Total)	$75.00
96P	15-Passenger Seats	$1,495.00

This document contains information considered Confidential between GM and its Clients uniquely. The information provided is not intended for public disclosure. Prices, specifications, and availability are subject to change without notice, and do not include certain fees, taxes and charges that may be required by law or vary by manufacturer or region. Performance figures are guidelines only, and actual performance may vary. Photos may not represent actual vehicles or exact configurations. Content based on report preparer's input is subject to the accuracy of the input provided.
Data Version: 20767. Data Updated: Oct 22, 2023 6:43:00 PM PDT.

ALAN JAY FLEET

CHRISTY SELF | 863-385-9610 | CHRISTY.SELF@ALANJAY.COM

Vehicle: [Fleet] 2024 Ford Transit Passenger Wagon (X2Y) T-350 148" Low Roof XL RWD (✔ Complete)

998	Engine: 3.5L PFDi V6 Flex-Fuel		$0.00
VK	Dark Palazzo Gray, Vinyl Front Bucket Seats		$0.00
X73	3.73 Axle Ratio		$0.00
YZ	Oxford White		$0.00
___	GVWR: TBD	Inc.	
	SUBTOTAL		**$55,855.00**
	Adjustments Total		$0.00
	Destination Charge		$2,095.00
	TOTAL PRICE		**$57,950.00**

FUEL ECONOMY

Est City:N/A

Est Highway:N/A

Est Highway Cruising Range:N/A

This document contains information considered Confidential between GM and its Clients uniquely. The information provided is not intended for public disclosure. Prices, specifications, and availability are subject to change without notice, and do not include certain fees, taxes and charges that may be required by law or vary by manufacturer or region. Performance figures are guidelines only, and actual performance may vary. Photos may not represent actual vehicles or exact configurations. Content based on report preparer's input is subject to the accuracy of the input provided.

Data Version: 20767. Data Updated: Oct 22, 2023 6:43:00 PM PDT.

Vehicle: [Fleet] 2024 Ford Transit Passenger Wagon (X2Y) T-350 148" Low Roof XL RWD (✔ Complete)

Standard Equipment

Mechanical	
	Engine: 3.5L PFDi V6 Flex-Fuel -inc: port injection (STD)
	Transmission: 10-Spd Automatic w/OD & SelectShift -inc: auxiliary transmission oil cooler (STD)
	3.73 Axle Ratio (STD)
	50-State Emissions System
	Rear-Wheel Drive
	70-Amp/Hr Maintenance-Free Battery w/Run Down Protection
	HD 250 Amp Alternator
	3226# Maximum Payload
	GVWR: TBD
	Gas-Pressurized Front Shock Absorbers and HD Rear Shock Absorbers
	Front Anti-Roll Bar
	Electric Power-Assist Steering
	25.1 Gal. Fuel Tank
	Single Stainless Steel Exhaust
	Strut Front Suspension w/Coil Springs
	Solid Axle Rear Suspension w/Leaf Springs
	4-Wheel Disc Brakes w/4-Wheel ABS, Front Vented Discs, Brake Assist, Hill Hold Control and Electric Parking Brake
Exterior	
	Wheels: 16" Silver Steel w/Black Hubcap
	Tires: 235/65R16C 121/119 R AS BSW
	Steel Spare Wheel
	Full-Size Spare Tire Stored Underbody w/Crankdown
	Clearcoat Paint
	Black Front Bumper
	Black Rear Bumper w/1 Tow Hook
	Black Bodyside Cladding and Black Wheel Well Trim
	Black Side Windows Trim and Black Front Windshield Trim
	Black Door Handles

This document contains information considered Confidential between GM and its Clients uniquely. The information provided is not intended for public disclosure. Prices, specifications, and availability are subject to change without notice, and do not include certain fees, taxes and charges that may be required by law or vary by manufacturer or region. Performance figures are guidelines only, and actual performance may vary. Photos may not represent actual vehicles or exact configurations. Content based on report preparer's input is subject to the accuracy of the input provided.
Data Version: 20767. Data Updated: Oct 22, 2023 6:43:00 PM PDT.

Vehicle: [Fleet] 2024 Ford Transit Passenger Wagon (X2Y) T-350 148" Low Roof XL RWD (✔ Complete)

Exterior	
	Black Power Side Mirrors w/Convex Spotter and Manual Folding
	Fixed Rear Window w/Defroster
	Light Tinted Glass
	Rain Detecting Variable Intermittent Wipers
	Fully Galvanized Steel Panels
	Black Grille
	Sliding Rear Passenger Side Door
	Split Swing-Out Rear Cargo Access
	Tailgate/Rear Door Lock Included w/Power Door Locks
	Ford Co-Pilot360 - Autolamp Auto On/Off Aero-Composite Halogen Auto High-Beam Headlamps w/Delay-Off
	Headlights-Automatic Highbeams
Entertainment	
	Radio w/Seek-Scan, Clock, Aux Audio Input Jack, Steering Wheel Controls and SYNC 3 External Memory Control
	Radio: AM/FM Stereo -inc: 4.0" multi-function display, Bluetooth and dual USB ports
	Streaming Audio
	Fixed Antenna
	8 Speakers (4 Front/4 Rear)
	Bluetooth Wireless Phone Connectivity
	1 LCD Monitor In The Front
Interior	
	Dark Palazzo Gray Cloth Bucket Seats -inc: 2-way manual driver seat w/lumbar, 2-way manual passenger seat and driver and passenger armrest (STD)
	4-Way Driver Seat
	4-Way Passenger Seat
	Removable Bench Front Facing Rear Seat
	Manual Tilt/Telescoping Steering Column
	Gauges -inc: Speedometer, Odometer, Engine Coolant Temp, Tachometer and Trip Odometer
	Fixed Rear Windows and Fixed 3rd Row Windows
	FordPass Connect 4G Mobile Hotspot Internet Access
	Removable Split-Bench 3rd Row Seat Front, 3 Manual and Adjustable Head Restraints

This document contains information considered Confidential between GM and its Clients uniquely. The information provided is not intended for public disclosure. Prices, specifications, and availability are subject to change without notice, and do not include certain fees, taxes and charges that may be required by law or vary by manufacturer or region. Performance figures are guidelines only, and actual performance may vary. Photos may not represent actual vehicles or exact configurations. Content based on report preparer's input is subject to the accuracy of the input provided.

Data Version: 20767. Data Updated: Oct 22, 2023 6:43:00 PM PDT.

Vehicle: [Fleet] 2024 Ford Transit Passenger Wagon (X2Y) T-350 148" Low Roof XL RWD (✔ Complete)

Interior	
	Removable Split-Bench Front Facing 4th Row Seat Number, Control and Type Head Restraint
	Front Cupholder
	Rear Cupholder
	Remote Keyless Entry w/Integrated Key Transmitter, Illuminated Entry and Panic Button
	Cruise Control w/Steering Wheel Controls
	Manual Air Conditioning
	Rear HVAC
	HVAC -inc: Underseat Ducts
	Locking Glove Box
	Driver Foot Rest
	Interior Trim -inc: Metal-Look Instrument Panel Insert
	Full Cloth Headliner
	Urethane Gear Shifter Material
	Cloth Front Bucket Seats
	Day-Night Rearview Mirror
	Driver And Passenger Visor Vanity Mirrors w/Driver And Passenger Illumination
	Partial Floor Console w/Storage and 2 12V DC Power Outlets
	Front Map Lights
	Fade-To-Off Interior Lighting
	Full Vinyl/Rubber Floor Covering
	Vinyl/Rubber Floor Trim
	Cargo Space Lights
	Pre-Collision Assist w/Automatic Emergency Braking
	Instrument Panel Bin, Driver / Passenger And Rear Door Bins
	Power 1st Row Windows w/Driver 1-Touch Down
	Power Door Locks w/Autolock Feature
	Driver Information Center
	Analog Appearance
	Seats w/Cloth Back Material
	Manual Adjustable Front Head Restraints and Manual Adjustable Rear Head Restraints

This document contains information considered Confidential between GM and its Clients uniquely. The information provided is not intended for public disclosure. Prices, specifications, and availability are subject to change without notice, and do not include certain fees, taxes and charges that may be required by law or vary by manufacturer or region. Performance figures are guidelines only, and actual performance may vary. Photos may not represent actual vehicles or exact configurations. Content based on report preparer's input is subject to the accuracy of the input provided.
Data Version: 20767. Data Updated: Oct 22, 2023 6:43:00 PM PDT.

Vehicle: [Fleet] 2024 Ford Transit Passenger Wagon (X2Y) T-350 148" Low Roof XL RWD (✔ Complete)

Interior	
	Securilock Anti-Theft Ignition (pats) Immobilizer
	2 12V DC Power Outlets
Safety-Mechanical	
	Ford Co-Pilot360 w/Side Wind Stabilization Electronic Stability Control (ESC) And Roll Stability Control (RSC)
	ABS And Driveline Traction Control
Safety-Exterior	
	Side Impact Beams
Safety-Interior	
	Dual Stage Driver And Passenger Seat-Mounted Side Airbags
	Lane-Keeping System Lane Departure Warning
	Driver Monitoring-Alert
	Low Tire Pressure Warning
	Dual Stage Driver And Passenger Front Airbags
	Safety Canopy System Curtain 1st, 2nd And 3rd Row Airbags
	Airbag Occupancy Sensor
	Outboard Front Lap And Shoulder Safety Belts -inc: Rear Center 3 Point, Height Adjusters and Pretensioners
	Back-Up Camera
WARRANTY	
	Basic Years: 3 Basic Miles/km: 36,000 Drivetrain Years: 5 Drivetrain Miles/km: 60,000 Corrosion Years: 5 Corrosion Miles/km: Unlimited Roadside Assistance Years: 5 Roadside Assistance Miles/km: 60,000

This document contains information considered Confidential between GM and its Clients uniquely. The information provided is not intended for public disclosure. Prices, specifications, and availability are subject to change without notice, and do not include certain fees, taxes and charges that may be required by law or vary by manufacturer or region. Performance figures are guidelines only, and actual performance may vary. Photos may not represent actual vehicles or exact configurations. Content based on report preparer's input is subject to the accuracy of the input provided.
Data Version: 20767. Data Updated: Oct 22, 2023 6:43:00 PM PDT.

Kelly Tractor Co.
Serving the Industry Since 1933

ktccat@kellytractor.com
www.kellytractor.com

December 4, 2023
City of Ocoee
Attn: Kiel Gajadhar
(407) 554-7305

REF: Florida Sheriff's Association Contract quote.
Term: October 1, 2023 – September 30, 2025
Contract: FSA23-EQU21.0, Equipment
Group: LIFT: Scissor Lift - Self Propelled
Item: 198, JLG X600AJ Compact Crawler Boom

JLG X600AJ Compact Crawler Boom

- **Horizontal Outreach**: 30 ft. 7 in.
- **Working Height**: 65 ft.
- **Platform Capacity:** 500 lbs.
- **Platform Height**: 59 ft. 3 in.
- **Machine Width**: 2 ft. 7 in.

STANDARD FEATURES

••Electronic Controls with One-Touch Outrigger Deployment
••5 ft Articulating Jib
••58 x 30 in. Removable Aluminum Platform
••Removable Controller
••Powered Track Widening
••Non-Marking Tracks
••AC Motor for Indoor Operation
••Lifting Eyes
••Fork Lift Pockets
••Air/Water Line to Platform
••110V AC Receptacle in Platform
••360 Degree Non-Continuous Swing
••Emergency Lowering Pump
••Proportional Controls
••Tie Down Lugs
••Telematics-Ready Harness
••SkyGuard™

POWER

••Kubota Diesel 7602 19.5 hp (14.5Kw)

JLG X600AJ Pkg 1-Diesel List Price	$177,730
Less 3% Contract Discount	$ -5,332
Contract Price	$172,398
Less Additional Discount	$ -13,157
Quote Total	**$162,490**

Includes delivery to City of Ocoee
Projected Availability: July/August 2024
Thank you for consideration of our product. Quote is valid for thirty days.

Greg Bennett
Governmental Sales
(305) 592-5360 office
(786) 579-2651 Direct
(786) 229-7037 cell
greg_bennett@kellytractor.com
www.kellytractor.com/governmental

} 1

City Of Ocoee

HOME TRUCK INVENTORY 2023 FORD F-550

2023 FORD F-550

2023 Ford F550 4x4
2Yrd Ernest Short Stop Mixer
$ 116,750.00
Delivery to Ocoee Fl.
$ 2575.00
Total price delivered $119235.00
Term needs funded before leaving Ernest factory.

John Fiedler
Truck Sales Representative

Rush Truck Center - Columbus
3950 Parkwest Drive
Columbus, OH 43228

fiedlerj@rushenterprises.com

614-541-4534 direct
937-715-6445 cell
800-331-5035 toll free
614-541-4675 fax

*Price does not include state and local taxes; tags; registration or title fees; dealer-imposed fees, including document preparation, processing or servicing fees, or any optional equipment or upfitting work selected by buyer. Valid while supplies last. Images shown may not reflect actual vehicle.

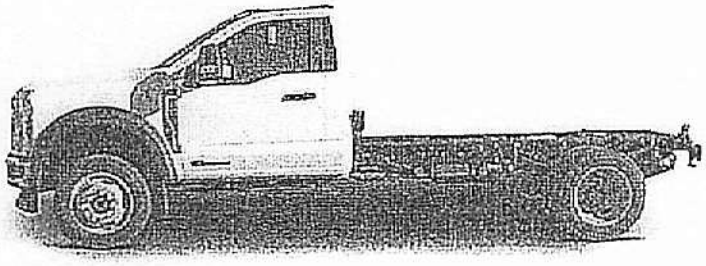

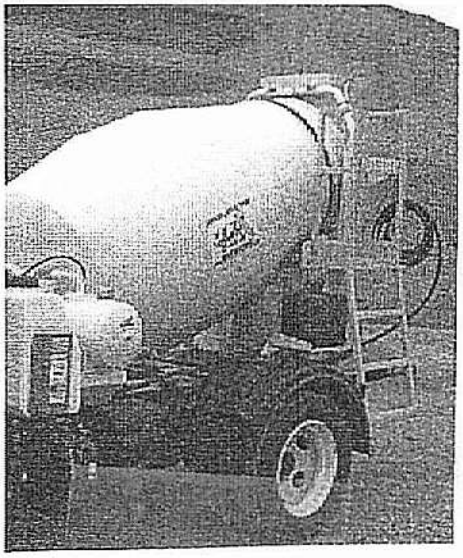

DESCRIPTION

2023 F550 6.7 V-8 Diesel 330 Hp and 950. lb.-torque. A 169-wheelbase, 84-inch cab to axle with fit a 12-foot body. White Regular cab with standard equipment of 4.2 instrument cluster productivity screen, 8-inch center-stack touchscreen. Equipped with power windows and locks with power heated mirrors. A trailer brake controller and SYNC 4 is standard. Lane Departure Warning, Pre-Collision Assist with Automatic Emergency Braking is standard equipment. This

truck has the XL Chrome Package that includes bright grill and chrome bumper with fog lamps with remote start system, inside cab 120-volt 400w. Is equipped with running boards and locking differential. Ford Motor Credit offers a wide range of loan or lease options tailored for your business needs. Call or come by Rush Truck Center - Cincinnati and let one of our sales professionals tell you about any of our Ford trucks in inventory as well as the great financing options currently available. Delivery available

VEHICLE HIGHLIGHTS

TRANSMISSION	10 Speed Ford	**ENGINE**	330hp Ford
UNIT TYPE	New Medium Duty	**COLOR**	OXFORD WHITE
GVWR	19,500		

VEHICLE DETAILS

VEHICLE MODEL	F-550	**VIN**	1FDUF5HTXPDA18242
YEAR	2023	**STOCK NUMBER**	1670070
COLOR	OXFORD WHITE	**GVWR**	19,500
TRUCK CATEGORY	Truck		

BODY DETAILS

BODY TYPE	Other	**WHEELBASE**	169
CAB TRIM	XL		

TRANSMISSION DETAILS

TRANSMISSION MANUFACTURER	Ford	**TRANSMISSION MODEL**	Torqshift
TRANSMISSION SPEED	10 Speed		

SUSPENSION DETAILS

FRONT AXLE POWER STEERING	False	REAR AXLE COUNT	Single
REAR AXLE RATIO	4.3	FRONT BRAKE	Disc
REAR BRAKE	Disc	CHASSIS TYPE	4x4

ADDITIONAL FEATURES

CAB INTERIOR COLOR	Medium Dark Slate	CAB TYPE	Chassis Cab
CAB INTERIOR FABRIC	Vinyl	SLEEPER HEATER	False
ENGINE MFG	Ford	ENGINE MODEL	6.7L Power Stroke V-8
HORSEPOWER	330	ENGINE BRAKE	Exhaust Brake
FUEL TANK ONE TYPE	Steel	FUEL TANK ONE GALLONS	40
FUEL TANK ONE POSITION	Rear	ENGINE BLOCK HEATER	1
FRONT WHEEL	Steel	FRONT TIRE SIZE	20
REAR WHEEL	Steel	REAR TIRE SIZE	19.5

STAFF REPORT

Meeting Date: January 16, 2024
Item #: 10

Contact Name: Milen Womack
Contact Number: Ext. 6013

Department Director: Stephen Krug
City Manager: Robert Frank

Subject: Approval of Resolution Relating to the Acquisition by Eminent Domain of Property. (Public Works Director Krug)

Background Summary:

The City needs to acquire a portion of certain properties for the Taylor St. / Kissimmee Ave. Reconstruction project identified in the Downtown Ocoee Master Plan. The small portions of the properties needed for right-of-way acquisition are approximately 500 square feet and 400 square feet, respectively. Further information regarding property valuations and negotiations is included in the attached Memorandum from Doty Solik Law.

Issue:

Should the Honorable Mayor and City Commissioners approve the City to exercise its power of eminent domain if the negotiated acquisition is unsuccessful?

Recommendations:

Staff recommends that the Honorable Mayor and City Commissioners approve the attached Resolution authorizing eminent domain and authorizing all necessary actions in order to proceed to acquire the properties by quick take proceedings.

Attachments:

1. Memorandum December 2023
2. RESOLUTION

Financial Impacts:

The final financial impact is unknown at this time. The ultimate valuation of the acquired property will be determined through the eminent domain process.

Type of Item: Consent

Mary Doty Solik, Esq.
121 S. Orange Ave., Ste. 1500
Orlando, FL 32801

407-367-7868
msolik@dotysoliklaw.com

MEMORANDUM

TO: **The Honorable Mayor and City Commissioners of the City of Ocoee**

FROM: **Mary Doty Solik, Special Counsel**

DATE: **December 20, 2023**

RE: **City of Ocoee Taylor & Franklin Streets Intersection Improvement Project**

Based on the current project design the City needs to acquire the following property:

Parcel No.	Property Owner	Property Interest Needed	Location of Property	Initial Appraised Value	Updated Appraised Value
102	Mahendra Setaram & Dinesh Setaram	Fee Simple Title	234 Taylor Street	$6,725.00	$7250.00
103	The Church of God of Prophecy – Ocoee	Fee Simple Title	233 Franklin Street	$3,550.00	$3,850.00

Dan DeRango initially appraised these properties in September 2022. Offers to purchase the properties at a price of 10% over the Initial Appraised Value were made in September 2022. Discussions have been ongoing but no negotiated agreements have been reached. Due to the passage of time Dan DeRango updated his appraisals in September 2023. Negotiations with counsel for both property owners have continued based on updated values but no agreements have been reached.

Attached is a proposed Resolution which authorizes the filing of a condemnation action and to proceed to acquire the necessary properties by a quick take proceeding. A quick take proceeding allows the City to acquire title to the needed property by demonstrating to the Court's satisfaction a public need and necessity for the property and the deposit of the City's good faith estimate of value in the Court's Registry. This evidence is presented at an Order of Taking hearing, generally held sixty to ninety days after the suit is filed. Once the City deposits its good faith estimate of value, title to the property transfers to the City. The property owner, however, is entitled to a jury trial on the ultimate valuation of the property at some

time in the future. This procedure allows public bodies to obtain title quickly so that public projects are not delayed but imposes the risk on the public body of what the ultimate valuation of the acquired property is determined to be.

RECOMMENDATION:

It is respectfully recommended that the Mayor and City Commissioners:

1. Approve the attached Resolution, authorizing execution thereof by the Mayor and City Clerk, and further authorizing all necessary actions in order to proceed to acquire the property by quick take proceeding.

MDS/
attachments

cc: Robert Frank
Craig Shadrix
Steve Krug
Milen Womack

RESOLUTION NO. 2024-_____

RESOLUTION OF THE CITY OF OCOEE, FLORIDA, RELATING TO THE ACQUISITION BY EMINENT DOMAIN OF PROPERTY, INCLUDING BUT NOT LIMITED TO FEE TITLE, LOCATED WITHIN THE CITY OF OCOEE; PROVIDING FOR SEVERABILITY; PROVIDING AN EFFECTIVE DATE.

WHEREAS, the City Commission of the City of Ocoee desires to serve the transportation and utilities needs for the City of Ocoee; and

WHEREAS, the City Commission of the City of Ocoee has the authority to adopt this Resolution pursuant to Article VIII of the Constitution of the State of Florida and Chapter 166, Florida Statutes; and

WHEREAS, the City Commission of the City of Ocoee finds a public need and necessity exists to acquire, by eminent domain, fee simple title to the land described in **Exhibit "A"** attached hereto and incorporated herein by reference; and

WHEREAS, the City Commission of the City of Ocoee finds a public need and necessity exists to acquire the land described in **Exhibit "A"** hereto for the construction of the Taylor and Franklin Streets Intersection Improvement Project (the "Project"); and

WHEREAS, the City Commission of the City of Ocoee finds that the acquisition of said land is necessary for the construction of the Project, and that the acquisition of said land therein otherwise to be in the public interest of the municipality and the people thereof; and

WHEREAS, the interest to be acquired, are more particularly described in **Exhibit "A"** hereto; and

WHEREAS, the City Commission of Ocoee has caused the property described in **Exhibit "A"** hereto to be surveyed and has located its line or area of construction and intends in good faith to construct the Project on or over the described property in accordance with Section 73.021 (6), Florida Statutes; and

WHEREAS, the City Commission of the City of Ocoee finds it necessary for the construction of the Project the City acquire a fee simple interest in the property identified and described in the attached **Exhibit "A"**, said acquisition being for the construction of the Taylor and Franklin Streets Intersection Improvement Project; and

WHEREAS, all conditions precedent to the exercise of the power of eminent domain have been satisfied by the City of Ocoee; and

WHEREAS, if any section, subsection, sentence, clause, phrase or portion of this Resolution is for any reason held invalid or unconstitutional by a court of competent jurisdiction, such portion shall be deemed a separate, distinct, and independent provision and such holding shall not affect the validity of the remaining portion hereto; and

WHEREAS, this Resolution shall become effective immediately upon passage and adoption.

THEREFORE, BE IT REOLVED BY THE CITY COMMISSION OF THE CITY OF OCOEE, FLORIDA, AS FOLLOWS:

Section 1. That the acquisition, by eminent domain, of the interest indicated in the following parcels for the purposes set forth above has been found to be, and is found and determined to be, necessary, in the best interest of the public, and for a public use and purpose, the legal descriptions of said parcels being more particularly described in **Exhibit "A"** attached hereto and by this reference made a part hereof:

PARCEL NO. 102
OWNER: Mahendra Setaram and Dinesh Setaram
INTEREST: Fee Simple

PARCEL NO. 103
OWNER: The Church of God of Prophecy, at Ocoee
INTEREST: Fee Simple

Section 2. That the appropriate officers, employees and attorneys for the City of Ocoee are authorized to proceed forthwith to institute such necessary and proper actions and proceedings and to comply with all legal requirements as may be necessary or proper for the acquisition by eminent domain of the fee simple absolute title in the property described in attached **Exhibit "A"**, the specific interest to be acquired therein being further set forth above and in the attached **Exhibit "A".**

Section 3. That if any section, subsection, sentence, clause, phrase or portion of this Resolution is for any reason held invalid or unconstitutional by a court of competent jurisdiction, such portion and such holding shall not affect the validity of the remaining portion hereto.

Section 4. That this Resolution shall become effective immediately upon adoption.

PASSED AND ADOPTED this ___ day of _____ 2024.

ADOPTED:

ATTEST:

CITY OF OCOEE, FLORIDA

By:_____
Name:
Title: City Clerk

By:_____
Name:
Title:

(SEAL)

FOR USE AND RELIANCE ONLY
BY THE CITY OF OCOEE, FLORIDA
APPROVED AS TO FORM AND LEGALITY
THIS ___ DAY OF _____2024.

By:_____
Name: Rick Geller
Title: City Attorney

APPROVAL BY THE OCOEE CITY COMMISSION
AT A MEETING HELD ON _____,
2024 UNDER AGENDA ITEM NO. _____

EXHIBIT "A"

PARCEL NO. 102

OWNER: Mahendra Setaram and Dinesh Setaram

INTEREST: Fee Simple

PARCEL 102
LEGAL DESCRIPTION

A PORTION OF THE SOUTH ½ OF LOT 49 AND THE EAST 10 FEET OF THE SOUTH ½ OF LOT 48, SIMS SUBDIVISION, ACCORDING TO THE MAP OR PLAT THEREOF AS RECORDED IN PLAT BOOK F, PAGE 126, PUBLIC RECORDS OF ORANGE COUNTY, FLORIDA DESCRIBED AS FOLLOWS:

COMMENCE AT THE SOUTHWEST CORNER OF THE SOUTH ½ OF THE EAST 10.00 FEET OF SAID LOT 48, THENCE RUN NORTH 89°12'30" EAST ALONG THE NORTH RIGHT-OF-WAY LINE OF W FRANKLIN STREET A DISTANCE OF 53.88 FEET TO THE POINT OF BEGINNING; SAID POINT ALSO LYING ON A CURVE CONCAVE SOUTHEASTERLY HAVING A RADIUS OF 14.00 FEET, AND A CHORD BEARING AND DISTANCE OF NORTH 40°34'23" EAST, 9.54 FEET, THENCE RUN NORTHEASTERLY ALONG THE ARC OF SAID CURVE THROUGH A CENTRAL ANGLE OF 39°50'15" AN ARC DISTANCE OF 9.73 FEET TO A POINT OF REVERSE CURVATURE OF A CURVE CONCAVE NORTHWESTERLY HAVING A RADIUS OF 74.00 FEET, AND A CHORD BEARING AND DISTANCE OF NORTH 43°49'20" EAST, 42.45 FEET, THENCE RUN NORTHEASTERLY ALONG THE ARC OF SAID CURVE THROUGH A CENTRAL ANGLE OF 33°20'21" AN ARC DISTANCE OF 43.06 FEET TO A POINT LYING ON THE WEST RIGHT-OF-WAY LINE OF TAYLOR STREET; THENCE RUN SOUTH 00°47'50" EAST ALONG SAID WEST RIGHT-OF-WAY A DISTANCE OF 17.18 FEET TO A POINT OF CURVATURE OF A CURVE CONCAVE NORTHWESTERLY HAVING A RADIUS OF 20.00 FEET, AND A CHORD BEARING AND DISTANCE OF SOUTH 44°12'20" WEST, 28.29 FEET, THENCE RUN SOUTHWESTERLY ALONG THE ARC OF SAID CURVE THROUGH A CENTRAL ANGLE OF 90°00'20" AN ARC DISTANCE OF 31.42 FEET TO A POINT OF TANGENCY; THENCE RUN SOUTH 89°12'30" WEST A DISTANCE OF 16.12 FEE TO THE POINT OF BEGINNING.

CONTAINS 518 SQUARE FEET MORE OR LESS.

PROPERTY ADDRESS: 234 Taylor Street
Ocoee, FL 34761

OTHER INTERESTS: Orange County Tax Collector

PARCEL NO. 103

OWNER: The Church of God of Prophecy- at Ocoee

INTEREST: Fee Simple

PARCEL 103

LEGAL DESCRIPTION

A PORTION OF THE SOUTH ½ OF LOTS 51 AND 52, B.M. SIMS SUBDIVISION, ACCORDING TO THE MAP OR PLAT THEREOF AS RECORDED IN PLAT BOOK F, PAGE 126 OF THE PUBLIC RECORDS OF ORANGE COUNTY, FLORIDA, DESCRIBED AS FOLLOWS:

BEGIN AT THE SOUTHWEST CORNER OF LOT 51, B.M. SIMS SUBDIVISION, ACCORDING TO THE MAP OR PLAT THEREOF AS RECORDED IN PLAT BOOK F, PAGE 126, OF THE PUBLIC RECORDS OF ORANGE COUNTY, FLORIDA; THENCE RUN NORTH 00°31'25" WEST ALONG THE WEST LINE OF SAID LOT 51, A DISTANCE OF 21.57 FEET TO A POINT ON A CURVE CONCAVE NORTHEASTERLY HAVING A RADIUS OF 90.00 FEET, AND CHORD BEARING AND DISTANCE OF SOUTH 7012'48" EAST, 62.31 FEET; THENCE DEPARTING SAID WEST LINE RUN SOUTHEASTERLY ALONG THE ARC OF SAID CURVE THROUGH A CENTRAL ANGLE OF 40°30'29" AN ARC DISTANCE OF 63.63 FEET TO A POINT LYING ON THE NORTH RIGHT-OF-WAY LINE OF W FRANKLIN STREET (A 60 FOOT WIDE RIGHT-OF-WAY PER FLORIDA DEPARTMENT OF TRANSPORTATION RIGHT-OF-WAY MAP SECTION NO. 75230, DATED 3/08/07); THENCE RUN SOUTH 89°31'58" WEST ALONG SAID RIGHT OF-WAY LINE A DISTANCE OF 58.44 FEET TO THE POINT OF BEGINNING.

CONTAINS 398 SQUARE FEET

PROPERTY ADDRESS: 233 Franklin Street
Ocoee, FL 34761

OTHER INTERESTS: Orange County Tax Collector
Lighthouse Real Estate Consultants, Inc. (Easement set forth in Warranty Deed dated August 6, 1991 and recorded in Official Records Book 4313, Page 970, Public Records of Orange County, Florida)

STAFF REPORT

Meeting Date: January 16, 2024
Item #: 11

Contact Name: Milen Womack
Contact Number: Ext. 6013

Department Director: Stephen Krug
City Manager: Robert Frank

Subject: Approval of Florida Central Railroad Projects Proposal. (Public Works Director Krug)

Background Summary:

Public Works has worked with Florida Central Railroad (FCEN) to improve the railroad crossing on W. Oakland Ave. and to remove the rail line south of W. Oakland Ave. to Maguire Road. Florida Central Railroad has started work on both of these items - installing concrete railroad panels for the W. Oakland Ave. crossing and removing the rails at Floral Street and Ohio Street. Florida Central Railroad has provided a proposal for additional work related to these projects currently underway:

1. FCEN has proposed to move the concrete panels located at the W. Mckey Street crossing to be reused at the crossing at Russell Drive ($87,178.00)
2. The rail crossing at W. Oakland Ave. is one concrete panel short of crossing the right-of-way. FCEN has provided a proposal for the additional panel needed ($7,190.00)

The agreed costs of these improvements total $94,368.00 and are adequately funded in the Kissimmee Railroad Abandonment budget and the W. Oakland Ave. Reconstruction budget. Public Works recommends approval of the work proposed.

Issue:

Should the Honorable Mayor and City Commissioners approve the Florida Central Railroad Proposals for the total amount of $94,368.00?

Recommendations:

Staff recommends the Honorable Mayor and City Commissioners approve the Florida Central Railroad Proposals and authorize the City Manager and Staff to approve and execute change orders to the work in accordance with the limits established in the Purchasing Code.

Attachments:

1. McKey Panel to Russell Proposal

Financial Impacts:

The cost of the work to relocate panels from W. Mckey Street to Russell Drive is adequately funded in Job P000411 Streets/Traffic RR Abandonment Kissimmee.

The cost of the work to add the additional panel on W. Oakland Ave. is adequately funded in Job 18002 W. Oakland Ave. Reconstruction.

Type of Item: Consent

FLORIDA CENTRAL RAILROAD CO LLC
FLORIDA MIDLAND RAILROAD CO LLC
FLORIDA NORTHERN RAILROAD LLC

3001 W Orange Ave Apopka Fl 32703 · PO Box 967 Plymouth Fl 32768 · 407-880-8500

City of Ocoee
Milen Womack
301 Maguire Rd
Ocoee, FL 34761

October 30, 2023

Dear Milen,

Florida Central Railroad is pleased to provide the following in regard to the above-named project. In recent discussions between FCEN and City of Ocoee it was proposed to relocate the 3-20' concrete panels from McKey St. rail crossing to be reused at the Russell Dr. rail crossing due to the current project involving removing rail from the lead between Oakland and just South of Ohio. FCEN and Railroad Contractor will work in tandem to complete the outline of work. FCEN under its own forces will see to additional Omega Panel at Oakland ave

I. RE: **McKey MBM Panels relocated to Russell Dr.**

SCOPE OF WORK

- Day 1 Prep Russell for panels. - Road Closure 3 days
- Day 2 Remove panels from McKey and relocate to Russell (Use of Crane) - Road Closure 3 days
- Day 3 Reassemble Russel panels with Ocoee seeing to the paving of approaches. Contractors recommend paving from 10' beyond the saw cut for the best approach.

DETAIL

- Sawcut W McKey St. and Russell Dr – Remove existing crossing at Russell-Move rail and other track material from McKey to Russell
- Grade and install 4" crushed concrete base at Russell- Install panels- Install relay rail from McKey- Install 10 10 ft railroad ties on each end of crossing – Tie into existing track and install 20-ton granite ballast and tamp 10' approaches.
- Disposal of debris
- City to pave McKey and Russell from 10' beyond sawcut and add Roadway Markings at Russell.

Total Lump sum $87,178.00

II. RE: **Additional Omega Panel for Oakland**

SCOPE OF WORK

- FCEN to order direct from manufacturer and install Omega Steel Clad Concrete Crossing panel

DETAIL

FCEN to remove rail, align and connect panel and reinstall rail to industry standards.

Material Cost	$2,190.00	30 day lead time
Shipping	$2,500.00	Subject to change based on actual delivery date
Labor	$2,500.00	
Total	**$7,190.00**	

Best Regards,

Karen Kuivinen

Karen Kuivinen
Manager RE/Contracts

If in agreement please advise on next steps needed for Purchase Order or other method.

STAFF REPORT

Meeting Date: January 16, 2024
Item #: 12

Contact Name: Doug Gaines
Contact Number: Ext. 1503

Department Director: Doug Gaines
City Manager: Robert Frank

Subject: Approval of Code Enforcement Agreement with Town of Windermere with 5% Adjustment to Cover the City of Ocoee's Costs. (Support Services Director Gaines)

Background Summary:

The City of Ocoee is willing to continue to provide part-time code enforcement services to the Town of Windermere with a 5% increase to cover the City of Ocoee's increased costs. The City of Ocoee will continue to make available to the Town of Windermere one (1) of the City of Ocoee's Code Enforcement Officers to provide code enforcement services within the Town of Windermere for approximately eight (8) hours a week. It is anticipated that the Code Enforcement Officer will perform the services over two (2) 4-hour segments on non-consecutive days; however, the schedule may change depending upon circumstances. If the Town of Windermere would like to use more than the weekly eight (8) hours per week, the Town will pay an overtime rate of $60.12/hour. This is dependent upon the workload of the Code Enforcement Officer.

Issue:

The City of Ocoee is requesting to increase the hourly rate by 5% to keep up with the City's costs. This would raise the hourly rate from $38.17 to $40.08. The time and a half rate for overtime would be $60.12.

Recommendations:

Staff recommends the Honorable Mayor and City Commissioners approve the agreement and authorize the Mayor to execute the necessary documents to implement the program. The City can continue to provide these services with no additional personnel hired.

Attachments:

1. Windermere Ocoee Code Enforcement Agreement

Financial Impacts:

The City will continue to receive approximately $1,000 per month, which covers 20% of all costs associated with Code Enforcement Officer Theresa Rodriguez (salary, benefits, retirement costs) and annual vehicle expenses.

Type of Item: Consent

Mayor
Rusty Johnson

City Manager
Robert Frank

Commissioners
Scott R. Kennedy, District 1
Rosemary Wilsen, District 2
Richard Firstner, District 3
Ages Hart, District 4

January 16, 2024

Mr. Robert Smith
Town Manager
Town of Windermere
614 Main Street, Suite A
Windermere, FL 34786

Re: 5% Adjustment and Overtime Clause: Agreement for Code Enforcement Services for the Town of Windermere

Dear Robert –

The City of Ocoee is willing to continue to provide limited code enforcement services for the Town of Windermere pursuant to the terms of this letter agreement. The only changes are a 5% adjustment to keep up with the City of Ocoee's costs and an overtime clause in section 5.

1. The City of Ocoee will make available to the Town of Windermere one (1) or more of the City of Ocoee's Code Enforcement Officers to provide code enforcement services within the Town of Windermere for approximately eight (8) hours a week. It is anticipated that the Code Enforcement Officer(s) will perform the services over two (2) 4-hour segments on non-consecutive days; however, the schedule may change depending upon circumstances. Additional time for preparation and attendance at Windermere Code Enforcement Board Meetings is also authorized pursuant to this agreement. Adjustments to the hours of service provided can be made by mutual agreement between the City of Ocoee City Manager and the Town of Windermere Town Manager.

2. The parties acknowledge that the Town of Windermere has its own Code Enforcement Board that will hear code enforcement cases within the Town of Windermere and that the City of Ocoee's Code Enforcement Board will not hear code enforcement cases within the Town of Windermere.

3. The Town of Windermere will take whatever steps are necessary to authorize the City of Ocoee's code enforcement personnel to perform the services herein, including, but not limited to, swearing in such personnel for code enforcement purposes.

4. The Code Enforcement Officer(s) will perform the following tasks in providing the code enforcement services for the Town of Windermere: receiving, checking, and/or investigating code enforcement complaints; proactively driving through the Town of Windermere to monitor code compliance; issuing notices or warnings, as necessary; and preparing for and attending

Windermere Code Enforcement Board Meetings. The parties acknowledge that the Code Enforcement Officer(s) will utilize City of Ocoee vehicles for the services provided herein, although the Town of Windermere may provide a magnetic sticker for the vehicles with the Town of Windermere logo or information covering the City of Ocoee's.

5. The Town of Windermere will pay to the City of Ocoee **$40.08/hour** for the work performed by the Code Enforcement Officer(s) for the Town of Windermere. The Town of Windermere will pay for such services within thirty (30) days of receipt of an invoice for the same. The parties acknowledge that the hourly rate set forth above is the sole compensation due for such services and that personnel time, wages, benefits, gas and vehicle maintenance expenses incurred by the City of Ocoee for the Code Enforcement Officer(s) and the provision of the services contemplated are included within the hourly rate. If the Town of Windermere would like to use more than the weekly eight (8) hours per week, the Town will pay an overtime rate of **$60.12/hour**. This is dependent upon the workload of the Code Enforcement Officer.

6. The Town of Windermere agrees to release, indemnify, defend, and hold harmless the City of Ocoee, its employees, and elected officials, to the extent provided by law, for claims, injuries or damages caused or alleged to be caused by the provision of services set forth herein. Notwithstanding the foregoing, nothing herein shall be construed as a release or requirement to indemnify the City of Ocoee for the gross negligence or willful misconduct of the Code Enforcement Officer(s).

7. This agreement may be terminated by either party with at least seven (7) days' prior notice. In the event of termination, the Town of Windermere shall pay the final invoice within thirty (30) days of receipt of the final invoice.

Please do not hesitate to contact me should you have any questions.

Sincerely,
CITY OF OCOEE

Robert Frank
City Manager

CITY OF OCOEE SIGNATURE PAGE

APPROVED:

ATTEST:

CITY OF OCOEE, FLORIDA

_____
Melanie Sibbitt, City Clerk

_____
Rusty Johnson, Mayor

DATE:_____

(SEAL)

FOR USE AND RELIANCE ONLY BY
THE CITY OF OCOEE, FLORIDA
APPROVED AS TO FORM AND LEGALITY ON
this ____ day of _____, 20__.

APPROVED BY THE OCOEE CITY
COMMISSION AT A MEETING HELD
_____, 20___,
UNDER AGENDA ITEM NO._____.

FISHBACK DOMINICK

By:_____
City Attorney

STAFF REPORT

Meeting Date: January 16, 2024
Item #: 13

Contact Name: Anoch Whitfield
Contact Number: Ext. 1016

Department Director: Michael Rumer
City Manager: Robert Frank

Subject: Palm Drive - Chinapen Property Small-Scale Comprehensive Plan Amendment from Low-Density Residential to Commercial & Rezoning from R-1A to C-2 - CPA-2023-002 & RZ-23-09-09. (Zoning Manager Whitfield)

Background Summary: The First Reading was held on December 5, 2023.

Owner/Applicant: Johnny Chinapen

Parcel ID and Site Location: The property is assigned parcel ID number 18-22-28-0000-00-109 and is located in District 3 on the north side of Palm Drive, approximately 160 feet west of the Pine Street and Palm Drive intersection.

Property Size: 1.65 acres

Existing Future Land Use Designation: Low Density Residential

Existing Zoning: R-1A

Actual land use, proposed land use and unique features of the subject property: The property is currently vacant with no unique environmentally sensitive features. The property owner currently does not have a proposed use and only seeks to amend the FLUM designation and rezone the property to allow for commercial development in the future.

	Current	**Proposed**
Future Land Use Map (FLUM) Designation	Low Density Residential (Density: max of up to 4 units/acre)	Commercial (FAR: 3.0)
Zoning District	R-1A	C-2

The current future land use designations, zoning and existing land uses of the surrounding properties are as follows:

DIRECTION	FUTURE LAND USE (FLU) DESIGNATION	ZONING CLASSIFICATION	EXISTING LAND USE
North	Low Density Residential (LDR)	R-1A	Single family residential use
East	LDR	R-1A	Single family residential use
South	Medium Density Residential & Commercial	RT-1 & A-2	Mobile home subdivision & vacant land
West	LDR	R-1	SR 429

Potential Development: There are currently no proposed uses for this property. However, based on the maximum development potential of the FLU designation, the current Low Density Residential (LDR) FLU designation would allow up to six (6) dwelling units. If the proposed Commercial FLU designation were approved, the property would be allowed a floor area ratio (FAR) of 3.0, which could yield up to 215,662 square feet of commercial land use. As the proposed C-2 zoning district is a conventional zoning classification, the development of the property will be required to comply with the requirements of the C-2 (Community Commercial) zoning district in terms of permitted uses, building setbacks, building heights, maximum impervious surface area, etc., and with other Land Development Code (LDC) design requirements for commercial uses, including stormwater, parking, circulation, access, landscaping, buffering, etc.

Special Overlays. The subject property is located within Sub-Area A of the Business Center Character Area of the State Road (SR) 429 Overlay District, adopted by Ordinance No. 2017-020 on July 18, 2017. Prior to the adoption of the Overlay, the City held three (3) public hearings on June 13, 20217 (Planning and Zoning Commission), June 20, 2017 (City Commission First Reading/Public Hearing), and July 18, 2017 (City Commission Second Reading. No citizens spoke in opposition to the proposed Overlay or raised concerns relative to transportation or impacts on residential uses within the Overlay area. The property owner's request to convert the property to Commercial with a C-2 (Community Commercial) zoning district is consistent with the intent of the Business Center Character Area to provide opportunities for office and retail uses in Sub-Area A.

Wekiva Study Area. The subject property is in the Wekiva Study Area; however, based on Figure 6.5 of the *City of Ocoee Guide to the Wekiva Study Area Requirements*, there are no karst features, Type A soils, sensitive natural habitats, or other protected features.

Transportation. The property will continue to be accessed via Palm Drive, which has been approved for realignment at its intersection with Ocoee Apopka Road. The transportation network in this area, in terms of both capacity and circulation, will be improved with planned traffic improvements associated with the Florida Department of Transportation (FDOT) State Road 438/East Silver Star Road Complete Streets Project, as well as planned project-related improvements north of this area. Furthermore, because of LDC requirements for minimum parking, circulation, landscape, buffer, and stormwater requirements, evaluation of traffic demands based on the maximum development potential for the proposed Commercial FLUM designation is not necessary. However, a traffic operations analysis may be required at the time of site plan review when a development comes in for consideration by the City.

Utilities. The property can be served by City water service, but sewer service is not available. At the time of the site plan review, the developer would need to coordinate with Ocoee Utilities for connection to sewer services or any needed upsizing of water service lines.

Issue:
Should the Honorable Mayor and City Commissioners approve the proposed ordinances for a Small Scale Comprehensive Plan Future Land Use Map Amendment from Low Density Residential to Commercial and corresponding Rezoning from Single-Family Dwelling (R-1A) to Community Commercial (C-2) for the Chinapen Property, assigned parcel ID number 18-22-28-0000-00-109?

Recommendations:
Development Review Committee (DRC) Recommendation:
The DRC met on Tuesday, November 7, 2023, to consider the proposed Small-Scale Comprehensive Plan Future Land Use Map Amendment and associated Rezoning, and, identifying no issues, made a recommendation of approval to convert the property from Low Density Residential (LDR) to Commercial (COMM) and rezone the property from Single-Family Dwelling (R-1A) to Community Commercial (C-2).

Planning & Zoning Commission (PZC) Recommendation:
The PZC considered this item at its Tuesday, November 14, 2023, public hearing and, identifying no issues, made a recommendation of approval for the proposed Small-Scale Comprehensive Plan Future Land Use Map Amendment and associated Rezoning to convert the property from Low Density Residential (LDR) to Commercial (COMM) and rezone it from Single-Family Dwelling (R-1A) to Community Commercial (C-2).

Staff Recommendation:
Staff recommends that the Honorable Mayor and City Commissioners approve the proposed ordinances for a Small Scale Comprehensive Plan Future Land Use Map Amendment from Low Density Residential to Commercial and corresponding Rezoning from Single-Family Dwelling (R-1A) to Community Commercial (C-2) for the Chinapen Property, assigned parcel ID number 18-22-28-0000-00-109.

Attachments:
1. Chinapen_Location
2. Chinapen_Aerial
3. Chinapen_Zoning
4. Chinapen_FLU
5. SSCPA Ordinance - Chinapen Property
6. Rezoning Ordinance - Chinapen Property
7. 24-002_AFD_Ad Chinapen Property_CPA_Jan 16 24 CC
8. 24-001_AFD_Ad Chinapen Property _RZ_Jan 16 24 CC

Financial Impacts:
No financial impacts are anticipated.

Type of Item: Second Reading Public Hearing

Chinapen Property - Comprehensive Plan Amendment & Rezoning Location Map

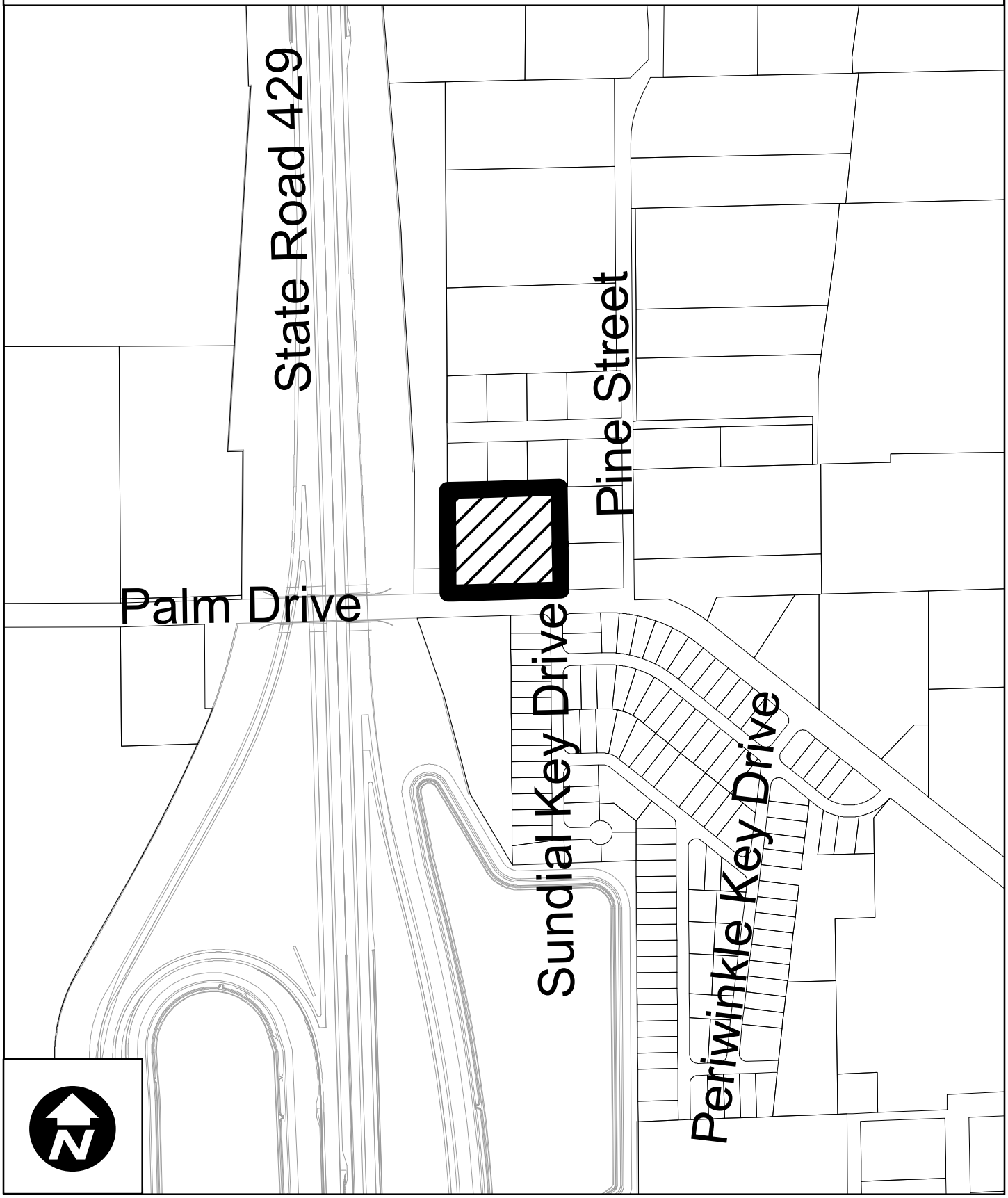

Chinapen Property - Comprehensive Plan Amendment & Rezoning
Aerial Map

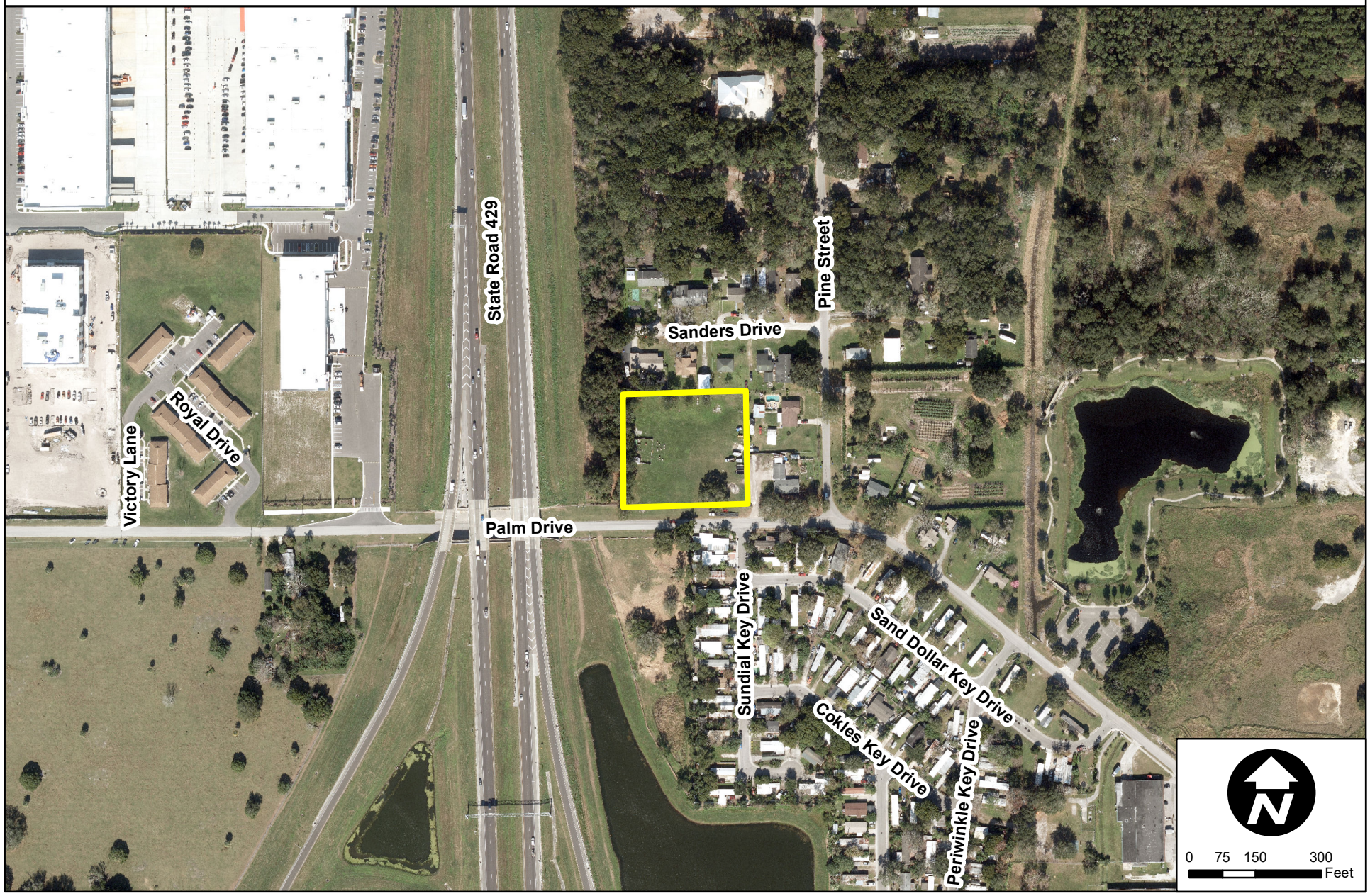

Chinapen Property - Comprehensive Plan Amendment & Rezoning
Surrounding Zoning Map

Development Services Department

0 100 200 400 Feet

Created: October 2023

Subject Property

Zoning Classification:
- General Agricultural (A-1)
- Suburban (A-2)
- Single-Family Dwelling (R-1AAA)
- Single-Family Dwelling (R-1AA)
- Single-Family Dwelling (R-1A)
- Single-Family Dwelling (R-1)
- One- & Two-Family Dwelling (R-2)
- Multiple-Family Dwelling (R-3)
- Mobile Home Subdivision (RT-1)
- Professional Offices & Services (P-S)
- Neighborhood Shopping (C-1)
- Community Commercial (C-2)
- General Commercial (C-3)
- Restricted Manufacturing & Warehousing (I-1)
- General Industrial (I-2)
- Commercial (PUD)
- Low Density (PUD)
- Medium Density (PUD)
- High Density (PUD)
- Public Use (PUD)
- Unclassified

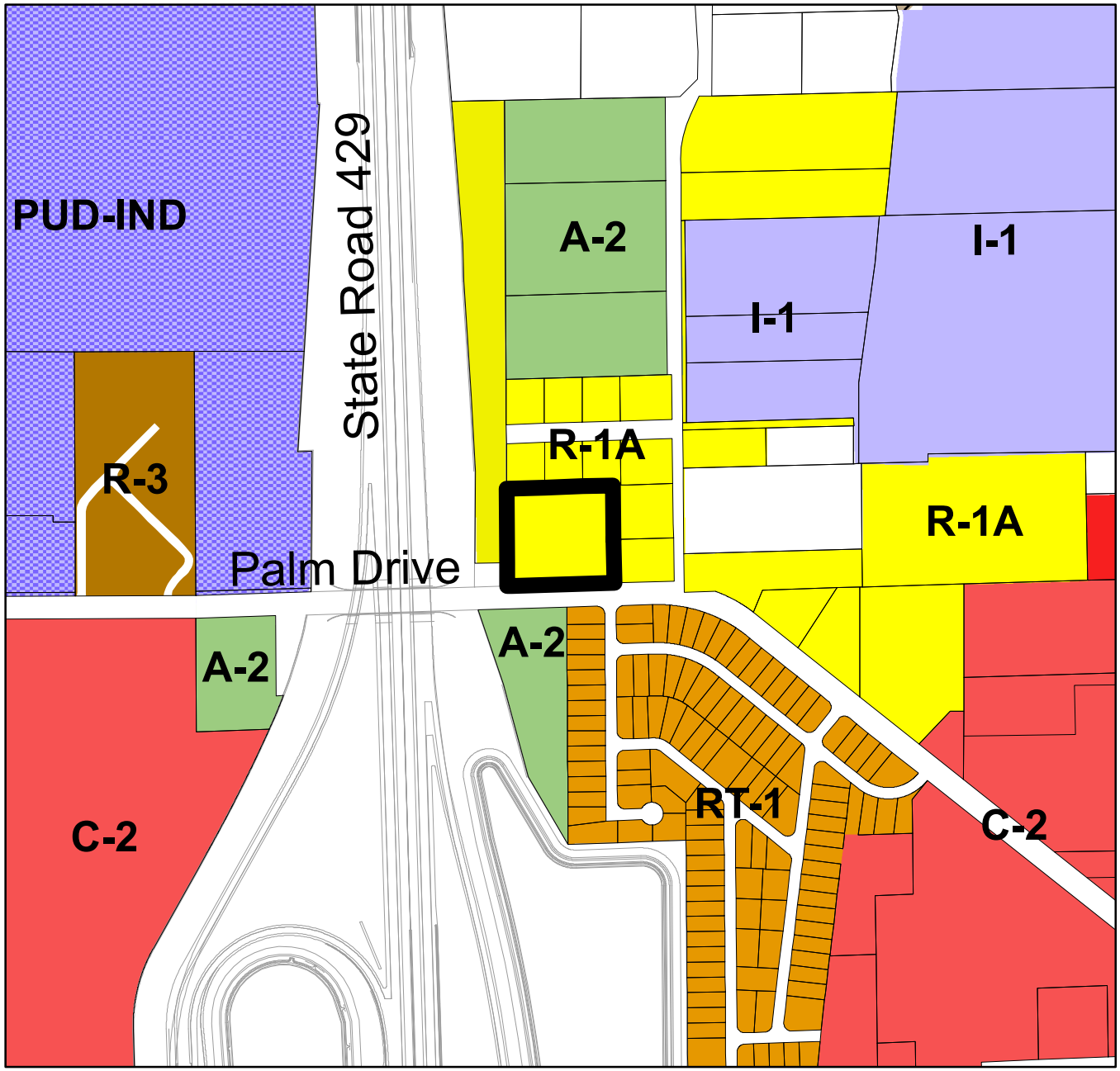

Chinapen Property - Comprehensive Plan Amendment & Rezoning
Surrounding Future Land Use Map

Development Services Department

0 100 200 400 Feet

Created: October 2023

Subject Property

Future Land Use Classification:
- Low Density Residential (LDR)
- Medium Density Residential (MDR)
- High Density Residential (HDR)
- Professional Offices and Services (PS)
- Commercial (COMM)
- Light Industrial (LI)
- Heavy Industrial (HI)
- Conservation/Floodplains (CONS)
- Recreation and Open Space (REC)
- Public Facilities/Institutional (INST)

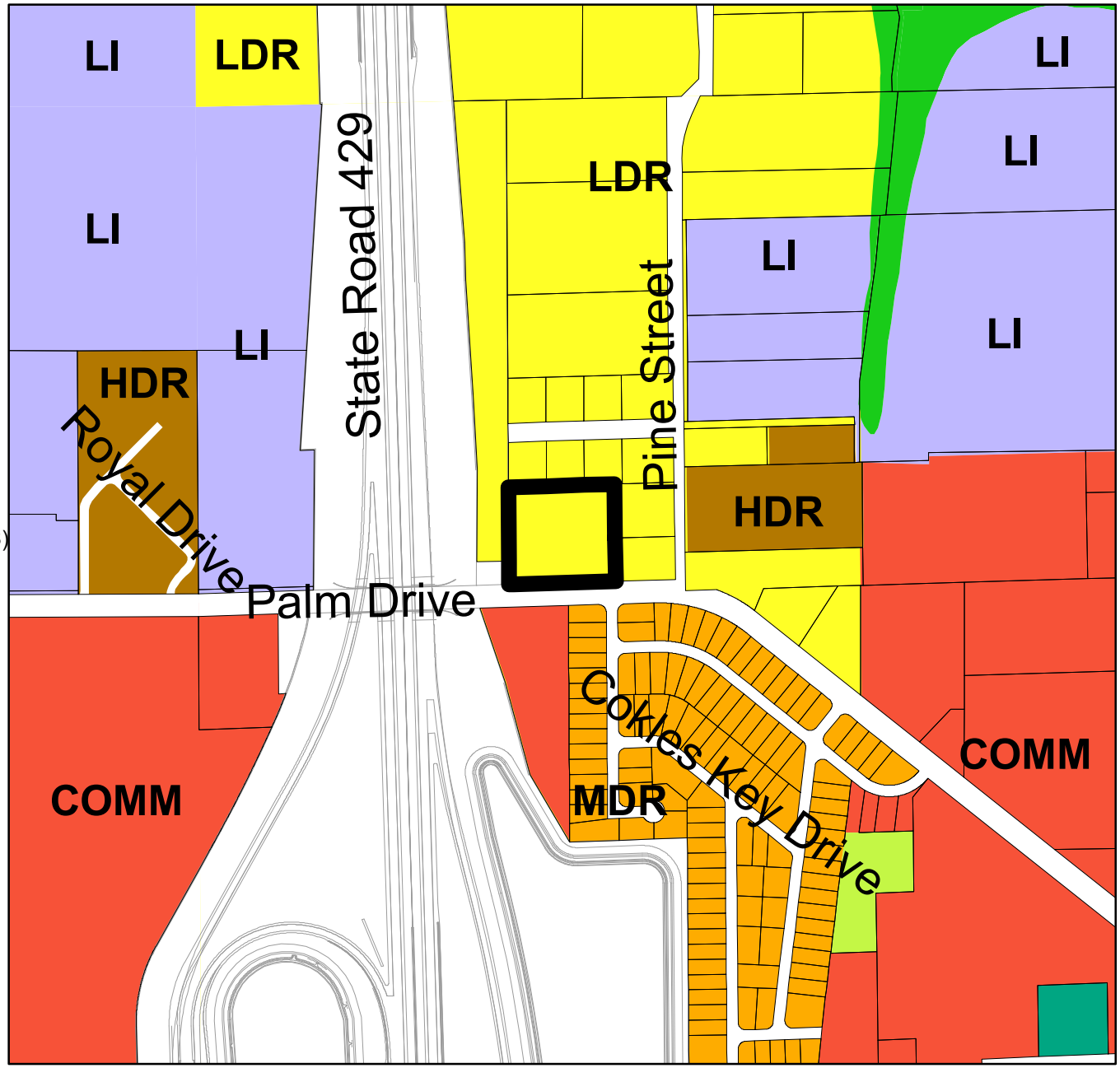

ORDINANCE NO. 2024-
(Small-Scale CPA – Chinapen Property)

TAX PARCEL ID: 18-22-28-0000-00-109

CASE NO. CPA-2023-002: Chinapen Property
Small-Scale Comprehensive Plan Amendment

AN ORDINANCE OF THE CITY OF OCOEE, FLORIDA, AMENDING THE CITY OF OCOEE COMPREHENSIVE PLAN AS ADOPTED IN 1991, AS AMENDED; AMENDING THE FUTURE LAND USE MAP OF THE OCOEE COMPREHENSIVE PLAN TO CHANGE THE FUTURE LAND USE MAP DESIGNATION FROM LOW DENSITY RESIDENTIAL TO COMMERCIAL FOR CERTAIN REAL PROPERTY CONTAINING APPROXIMATELY 1.65 ACRES LOCATED ON THE NORTH SIDE OF PALM DRIVE, APPROXIMATELY 160 FEET WEST OF THE PINE STREET AND PALM DRIVE INTERSECTION; PROVIDING FOR AND AUTHORIZING THE REVISION OF THE OFFICIAL CITY FUTURE LAND USE MAP; PREVAILING IN THE EVENT OF ANY INCONSISTENCY; PROVIDING FOR SEVERABILITY; PROVIDING FOR AN EFFECTIVE DATE.

WHEREAS, the City Commission of the City of Ocoee (the "Ocoee City Commission") has adopted the City's Comprehensive Plan (the "Ocoee Comprehensive Plan") by Ordinance No. 91-28 on September 18, 1991 pursuant to Chapter 163, Part II, Florida Statutes, the Growth Policy Act (the "Act"); and

WHEREAS, Chapter 163, Part II, Florida Statutes, sets forth procedures and requirements for a local government to adopt a comprehensive plan and amendments thereto; and

WHEREAS, the owner (the "Applicant") of certain real property located within the corporate limits of the City of Ocoee, Florida, assigned tax parcel identification number 18-22-28-0000-00-109, more particularly described in **Exhibit "A"** and depicted in **Exhibit "B"**, has submitted an application to the Ocoee City Commission to amend the Comprehensive Plan Future Land Use designation (the "Comprehensive Plan Amendment") of said real property from Low Density Residential to Commercial; and

WHEREAS, pursuant to Section 5-9(C) of Article V of the Land Development Code of the City of Ocoee, Florida, the Development Services Director has reviewed said Comprehensive Plan Amendment application and determined that said Comprehensive Plan Amendment is consistent with the Ocoee Comprehensive Plan, as amended from time to time; and

WHEREAS, pursuant to Section 163.3174(4)(a), Florida Statutes, the City's Local Planning Agency (LPA) conducted a publicly noticed and advertised public hearing on Tuesday, November 14, 2023, to consider and make recommendation of said proposed Comprehensive Plan Amendment; and

WHEREAS, pursuant to Section 163.3184(11), Florida Statutes, on Tuesday, January 16, 2024, the Ocoee City Commission held a de novo advertised public hearing with respect to the proposed Comprehensive Plan Amendment and determined, after consideration of public comments, that the proposed Comprehensive Plan Amendment is consistent with the Ocoee Comprehensive Plan.

NOW, THEREFORE, BE IT ORDAINED BY THE CITY COMMISSION OF THE CITY OF OCOEE, FLORIDA, AS FOLLOWS:

SECTION 1. **RECITALS**. The foregoing recitals are hereby ratified and confirmed as true and correct and incorporated herein by this reference.

SECTION 2. **AUTHORITY**. The City Commission of the City of Ocoee has the authority to adopt this Ordinance pursuant to Article VIII of the Constitution of the State of Florida and Chapters 163 and 166, Florida Statutes.

SECTION 3. **COMPREHENSIVE PLAN AMENDMENT**. The Future Land Use Map within the Future Land Use Element of the Ocoee Comprehensive Plan is hereby amended to change the future land use designation of the Subject Property, as particularly described in Exhibit "A" and depicted in Exhibit "B", from Low Density Residential (LDR) to Commercial (COMM).

SECTION 4. **COMPREHENSIVE PLAN**. The City Clerk is hereby authorized and directed to revise the adopted Future Land Use Map of the City of Ocoee in order to incorporate the Comprehensive Plan Amendment enacted by this Ordinance.

SECTION 5. **CONFLICTING ORDINANCES**. This ordinance prevails in the event of any inconsistency with all ordinances or parts of ordinances in conflict herewith.

SECTION 6. **SEVERABILITY**. If any section, subsection, sentence, clause, phrase, or portion of this Ordinance is for any reason held invalid or unconstitutional by any court of competent jurisdiction, such portion shall be deemed a separate, distinct, and independent provision and such holding shall not affect the validity of the remaining portion hereto.

SECTION 7. **EFFECTIVE DATE**. This Ordinance shall become effective thirty-one (31) days after adoption, unless challenged prior to that date pursuant to Section 163.3187(5), Florida Statutes.

PASSED AND ADOPTED this _____ day of _____, 2024.

Space intentionally left blank

ATTEST:

APPROVED:
CITY OF OCOEE, FLORIDA

_____
Melanie Sibbitt, City Clerk

_____
Rusty Johnson, Mayor

(SEAL)

ADVERTISED _____, 2024
READ FIRST TIME _____, 2023.
READ SECOND TIME AND ADOPTED
_____, 2024.
UNDER AGENDA ITEM NO. _____

FOR USE AND RELIANCE ONLY BY THE CITY OF OCOEE, FLORIDA; APPROVED AS TO FORM AND LEGALITY
this _____ day of _____, 2024.

FISHBACK DOMINICK

By: _____
City Attorney

EXHIBIT "A"

LEGAL DESCRIPTION

PARCEL ID NO.: 18-22-28-0000-00-109

COMM AT SE COR OF NW1/4 OF NW1/4 OF SEC 18 RUN N00-09-10E 29.4 FT TH S89-08-20W 20 FT TH CONT S89-08-20W 157.01 FT FOR POB TH CONT S89-08-20W 279.39 FT TH N00-09-10E 256.9 FT TH N89-08-20E 279.39 FT TH S00-09-10W 256.9 FT TO POB IN SEC 18-22-28

EXHIBIT "B"

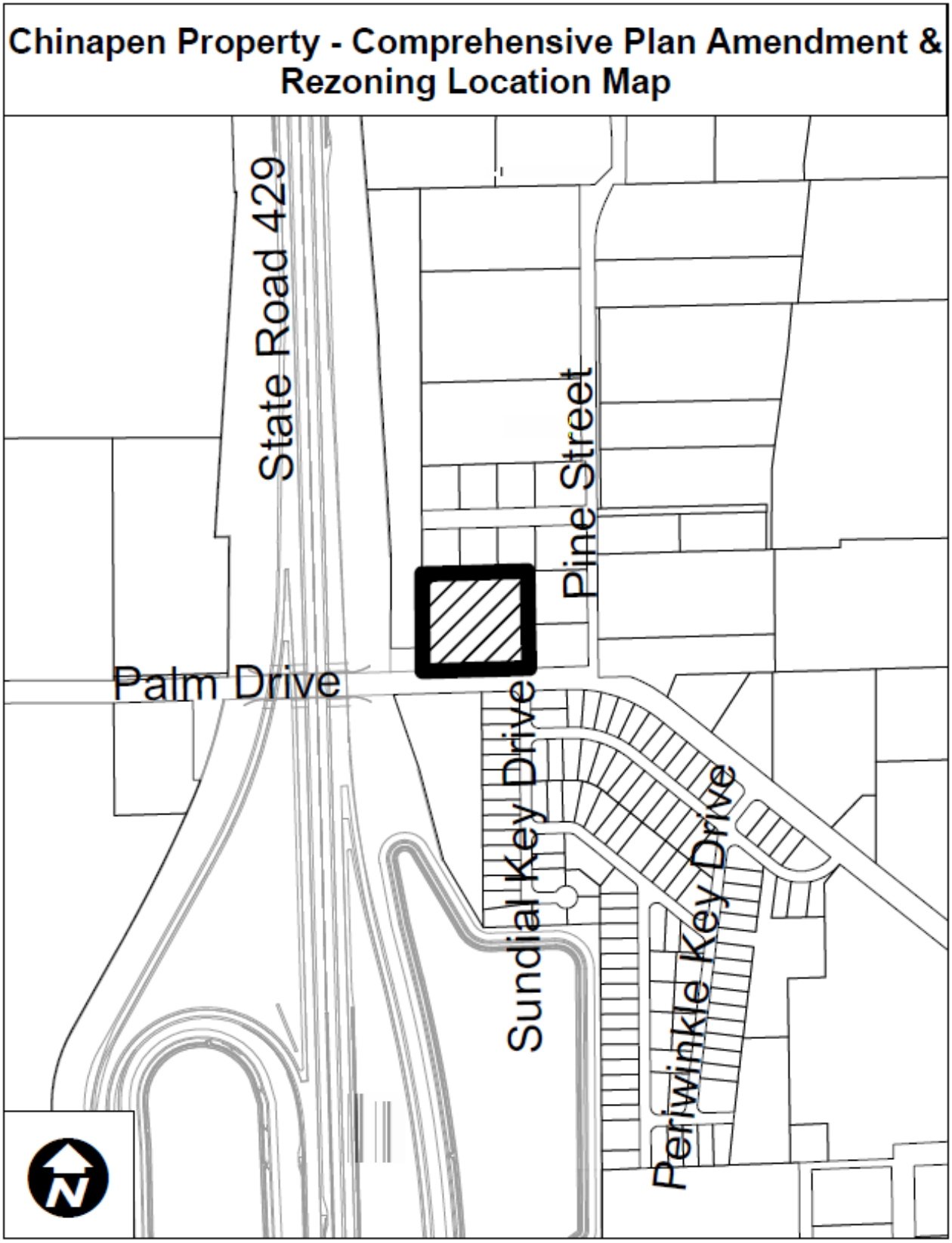
Chinapen Property - Comprehensive Plan Amendment & Rezoning Location Map
State Road 429
Pine Street
Palm Drive
Sundial Key Drive
Periwinkle Key Drive
N

ORDINANCE NO. 2024-
(Rezoning Ordinance for Chinapen Property)

TAX PARCEL ID: 18-22-28-0000-00-109

CASE NO. RZ-23-09-09: Chinapen Property

AN ORDINANCE OF THE CITY OF OCOEE, FLORIDA, CHANGING THE ZONING CLASSIFICATION FROM R-1A (SINGLE FAMILY DWELLING DISTRICT) TO C-2 (COMMUNITY COMMERCIAL DISTRICT) ON CERTAIN REAL PROPERTY CONTAINING APPROXIMATELY 1.65 ACRES LOCATED ON THE NORTH SIDE OF PALM DRIVE, APPROXIMATELY 160 FEET WEST OF THE PINE STREET AND PALM DRIVE INTERSECTION; FINDING SUCH ZONING TO BE CONSISTENT WITH THE OCOEE COMPREHENSIVE PLAN; PROVIDING FOR AND AUTHORIZING THE REVISION OF THE OFFICIAL CITY ZONING MAP; PREVAILING IN THE EVENT OF ANY INCONSISTENCY; PROVIDING FOR SEVERABILITY; AND PROVIDING FOR AN EFFECTIVE DATE.

WHEREAS, the owner (the "Applicant") of certain real property located within the corporate limits of the City of Ocoee, Florida, as hereinafter described, has submitted an application to the City Commission of the City of Ocoee, Florida (the "Ocoee City Commission") to rezone said real property (the "Rezoning"); and

WHEREAS, the Applicant seeks to rezone certain real property containing approximately 1.65 acres, more particularly described in **Exhibit "A"** attached hereto and by this reference made a part hereof, from R-1A to C-2; and

WHEREAS, pursuant to Section 5-9(B) of Article V of the Land Development Code of the City of Ocoee, Florida (the "Ocoee City Code"), the City Development Services Director has reviewed said Rezoning application and determined that the Rezoning is consistent with the City of Ocoee Comprehensive Plan as set forth in Ordinance No. 91-28, adopted September 18, 1991, as amended (the "Ocoee Comprehensive Plan"); and

WHEREAS, said Rezoning application was scheduled for review and recommendation by the Planning and Zoning Commission of the City of Ocoee, Florida (the "Planning and Zoning Commission"), acting as the Local Planning Agency; and

WHEREAS, on November 7, 2023, the Planning and Zoning Commission held a public hearing and reviewed said Rezoning application for consistency with the Ocoee Comprehensive Plan and determined that the Rezoning is consistent with the Ocoee Comprehensive Plan and is in the best interest of the City, and recommended to the Ocoee City Commission that the zoning classification of said real property be rezoned as requested by the Applicant and that the Ocoee City Commission find that the Rezoning requested by the Applicant to be consistent with the Ocoee Comprehensive Plan; and

WHEREAS, on January 16, 2024, the Ocoee City Commission held a de novo advertised public hearing with respect to the proposed Rezoning of said real property and determined that the Rezoning is consistent with the Ocoee Comprehensive Plan; and

WHEREAS, this Ordinance has been considered by the Ocoee City Commission in accordance with the procedures set forth in Section 166.041(3)(a), Florida Statutes.

NOW, THEREFORE, BE IT ENACTED BY THE CITY COMMISSION OF THE CITY OF OCOEE, FLORIDA, AS FOLLOWS:

SECTION 1. **AUTHORITY**. The Ocoee City Commission has the authority to adopt this Ordinance pursuant to Article VIII of the Constitution of the State of Florida and Chapters 163 and 166, Florida Statutes.

SECTION 2. **REZONING**. The zoning classification, as defined in the Ocoee City Code, of the Property described in **Exhibit "A"** containing approximately 1.65 acres located within the corporate limits of the City of Ocoee, Florida, is hereby changed from R-1A to C-2. A map of said land herein described which clearly shows the area of the Rezoning is attached hereto as **Exhibit "B"** and by this reference is made a part hereof.

SECTION 3. **COMPREHENSIVE PLAN**. The Ocoee City Commission hereby finds the Rezoning of the land described in this Ordinance to be consistent with the Ocoee Comprehensive Plan.

SECTION 4. **ZONING MAP**. The City Clerk is hereby authorized and directed to revise the Official Zoning Map of the City of Ocoee in order to incorporate the Rezoning enacted by this Ordinance, and the Mayor and City Clerk are hereby authorized to execute said revised Official Zoning Map in accordance with the provisions of Section 5-1(G) of Article V of the Ocoee City Code.

SECTION 5. **CONFLICTING ORDINANCES**. This ordinance prevails in the event of any inconsistency with all ordinances or parts of ordinances in conflict herewith.

SECTION 6. **SEVERABILITY**. If any section, subsection, sentence, clause, phrase, or portion of this Ordinance is for any reason held invalid or unconstitutional by any court of competent jurisdiction, such portion shall be deemed a separate, distinct, and independent provision and such holding shall not affect the validity of the remaining portion hereto.

SECTION 7. **EFFECTIVE DATE**. This Ordinance shall become effective ten (10) days after its passage and adoption.

PASSED AND ADOPTED this _____ day of _____, 2024.

Space intentionally left blank

ATTEST:

_____
Melanie Sibbitt, City Clerk

(SEAL)

APPROVED:
CITY OF OCOEE, FLORIDA

_____
Rusty Johnson, Mayor

ADVERTISED _____, 2024
READ FIRST TIME _____, 2023.
READ SECOND TIME AND ADOPTED
_____, 2024.
UNDER AGENDA ITEM NO. _____

FOR USE AND RELIANCE ONLY BY THE CITY OF OCOEE, FLORIDA; APPROVED AS TO FORM AND LEGALITY
this _____ day of _____, 2024.

FISHBACK DOMINICK

By: _____
City Attorney

EXHIBIT "A"

LEGAL DESCRIPTION

PARCEL ID NO.: 18-22-28-0000-00-109

COMM AT SE COR OF NW1/4 OF NW1/4 OF SEC 18 RUN N00-09-10E 29.4 FT TH S89-08-20W 20 FT TH CONT S89-08-20W 157.01 FT FOR POB TH CONT S89-08-20W 279.39 FT TH N00-09-10E 256.9 FT TH N89-08-20E 279.39 FT TH S00-09-10W 256.9 FT TO POB IN SEC 18-22-28

EXHIBIT "B"

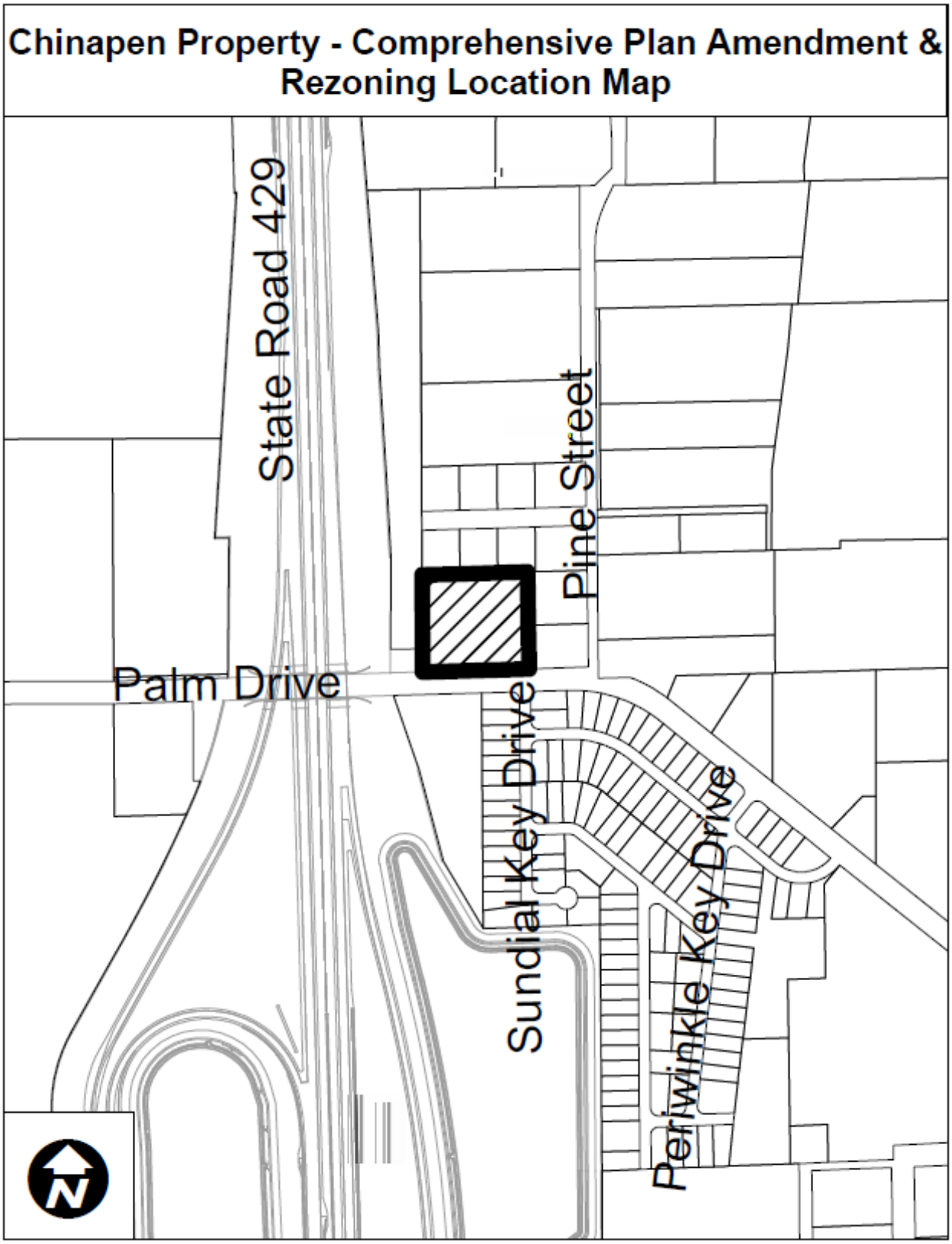
Chinapen Property - Comprehensive Plan Amendment & Rezoning Location Map
State Road 429
Pine Street
Palm Drive
Sundial Key Drive
Periwinkle Key Drive
N

Orlando Sentinel
MEDIA GROUP

Published Daily
ORANGE County, Florida

Sold To:
City of Ocoee - CU00104366
1 North Bluford Avenue
OCOEE, FL 34761-2258

Bill To:
City of Ocoee - CU00104366
1 North Bluford Avenue
OCOEE, FL 34761-2258

State Of Florida
County Of Orange

Before the undersigned authority personally appeared
Rose Williams, who on oath says that he or she is a duly authorized representative of the ORLANDO SENTINEL, a DAILY newspaper published in ORANGE County, Florida; that the attached copy of advertisement, being a Legal Notice in:

The matter of 11150-Public Hearing Notice
Was published in said newspaper by print in the issues of, or by publication on the newspaper's website, if authorized on Jan 07, 2024.

Affiant further says that the newspaper complies with all legal requirements for publication in Chapter 50, Florida Statutes.

Rose Williams

Signature of Affiant

Rose Williams

Name of Affiant

Sworn to and subscribed before me on this 8 day of January, 2024,
by above Affiant, who is personally known to me (X) or who has produced identification ( ).

LeAnne Rollins

Signature of Notary Public

LEANNE ROLLINS
Notary Public - State of Florida
Commission # GG 982233
My Comm. Expires Apr 27, 2024
Bonded through National Notary Assn.

Name of Notary, Typed, Printed, or Stamped

7560768

Orlando Sentinel
MEDIA GROUP

CITY OF OCOEE NOTICE OF PUBLIC HEARING TO CONSIDER THE PALM DRIVE - CHINAPEN PROPERTY SMALL-SCALE COMPREHENSIVE PLAN AMENDMENT FROM LOW DENSITY RESIDENTIAL TO COMMERCIAL CASE NUMBER: CPA-2023-002

NOTICE IS HEREBY GIVEN, pursuant to Article I, Sections 1-8 and 1-10, and Article V, Section 5-9, of the City of Ocoee Land Development Code that on TUESDAY, JANUARY 16, 2024, AT 6:15 P.M. or as soon thereafter as practical, the OCOEE CITY COMMISSION will hold a PUBLIC HEARING at the City of Ocoee Commission Chambers located at 1 North Bluford Avenue, Ocoee, Florida, to consider a Small-Scale Comprehensive Plan Amendment from Low Density Residential to Commercial for the Palm Drive - Chinapen Property. The property contains approximately 1.65 acres and is assigned parcel ID number 18-22-28-0000-00-109. It is located on the north side of Palm Drive, approximately 160 feet west of the Pine Street and Palm Drive intersection.

AN ORDINANCE OF THE CITY OF OCOEE, FLORIDA, AMENDING THE CITY OF OCOEE COMPREHENSIVE PLAN AS ADOPTED IN 1991, AS AMENDED; AMENDING THE FUTURE LAND USE MAP OF THE OCOEE COMPREHENSIVE PLAN TO CHANGE THE FUTURE LAND USE MAP DESIGNATION FROM LOW DENSITY RESIDENTIAL TO COMMERCIAL FOR CERTAIN REAL PROPERTY CONTAINING APPROXIMATELY 1.65 ACRES LOCATED ON THE NORTH SIDE OF PALM DRIVE, APPROXIMATELY 160 FEET WEST OF THE PINE STREET AND PALM DRIVE INTERSECTION; PROVIDING FOR AND AUTHORIZING THE REVISION OF THE OFFICIAL CITY FUTURE LAND USE MAP; PREVAILING IN THE EVENT OF ANY INCONSISTENCY; PROVIDING FOR SEVERABILITY; PROVIDING FOR AN EFFECTIVE DATE.

Interested parties may appear at the public hearing and be heard with respect to the proposed action. The complete case file may be inspected at the Ocoee Development Services Department, located at 1 North Bluford Avenue, Ocoee, Florida, between the hours of 8:00 a.m. and 5:00 p.m., Monday through Friday, except for legal holidays. The City Commission may continue the public hearing to other dates and times as it deems necessary. Any interested party shall be advised that the dates, times, and places of any continuation of these or continued public hearings shall be announced during the hearings and that no further notices regarding these matters will be published. You are advised that any person who desires to appeal any decision made during the public hearings will need a record of the proceedings and, for this purpose, may need to ensure that a verbatim record of the proceedings is made, which includes the testimony and evidence upon which the appeal is based. Persons with disabilities needing assistance to participate in any of the proceedings should contact the City Clerk's Office 48 hours in advance of the meeting at (407) 905-3105.

Melanie Sibbitt, City Clerk
1/07/2024 7560768

7560768

Orlando Sentinel
MEDIA GROUP

Published Daily
ORANGE County, Florida

Sold To:
City of Ocoee - CU00104366
1 North Bluford Avenue
OCOEE, FL 34761-2258

Bill To:
City of Ocoee - CU00104366
1 North Bluford Avenue
OCOEE, FL 34761-2258

State Of Florida
County Of Orange

Before the undersigned authority personally appeared
Rose Williams, who on oath says that he or she is a duly authorized representative of the ORLANDO SENTINEL, a DAILY newspaper published in ORANGE County, Florida; that the attached copy of advertisement, being a Legal Notice in:

The matter of 11150-Public Hearing Notice
Was published in said newspaper by print in the issues of, or by publication on the newspaper's website, if authorized on Jan 07, 2024.

Affiant further says that the newspaper complies with all legal requirements for publication in Chapter 50, Florida Statutes.

Rose Williams

Signature of Affiant

Rose Williams

Name of Affiant

Sworn to and subscribed before me on this 8 day of January, 2024,
by above Affiant, who is personally known to me (X) or who has produced identification ( ).

LeAnne Rollins

Signature of Notary Public

LEANNE ROLLINS
Notary Public - State of Florida
Commission # GG 982233
My Comm. Expires Apr 27, 2024
Bonded through National Notary Assn.

Name of Notary, Typed, Printed, or Stamped

7560757

Orlando Sentinel
MEDIA GROUP

CITY OF OCOEE NOTICE OF PUBLIC HEARING TO CONSIDER THE PALM DRIVE - CHINAPEN PROPERTY REZONING FROM R-1A (SINGLE-FAMILY DWELLING) TO C-2 (COMMUNITY COMMERCIAL) CASE NUMBER: RZ-23-09-09

NOTICE IS HEREBY GIVEN, pursuant to Article I, Sections 1-9 and 1-10, and Article V, Section 5-9, of the City of Ocoee Land Development Code that on TUESDAY, JANUARY 16, 2024, AT 6:15 P.M. or as soon thereafter as practical, the OCOEE CITY COMMISSION will hold a PUBLIC HEARING at the City of Ocoee Commission Chambers located at 1 North Bluford Avenue, Ocoee, Florida, to consider a Rezoning from R-1A (Single-Family Dwelling) to C-2 (Community Commercial) for the Palm Drive - Chinapen Property. The property contains approximately 1.65 acres and is assigned parcel ID number 18-22-28-0000-00-109. It is located on the north side of Palm Drive, approximately 160 feet west of the Pine Street and Palm Drive intersection.

AN ORDINANCE OF THE CITY OF OCOEE, FLORIDA, CHANGING THE ZONING CLASSIFICATION FROM R-1A (SINGLE-FAMILY DWELLING DISTRICT) TO C-2 (COMMUNITY COMMERCIAL DISTRICT) ON CERTAIN REAL PROPERTY CONTAINING APPROXIMATELY 1.65 ACRES LOCATED ON THE NORTH SIDE OF PALM DRIVE, APPROXIMATELY 160 FEET WEST OF THE PINE STREET AND PALM DRIVE INTERSECTION; FINDING SUCH ZONING TO BE CONSISTENT WITH THE OCOEE COMPREHENSIVE PLAN; PROVIDING FOR AND AUTHORIZING THE REVISION OF THE OFFICIAL CITY ZONING MAP; PREVAILING IN THE EVENT OF ANY INCONSISTENCY; PROVIDING FOR SEVERABILITY; AND PROVIDING FOR AN EFFECTIVE DATE.

Interested parties may appear at the public hearing and be heard with respect to the proposed action. The complete case file may be inspected at the Ocoee Development Services Department, located at 1 North Bluford Avenue, Ocoee, Florida, between the hours of 8:00 a.m. and 5:00 p.m., Monday through Friday, except for legal holidays. The City Commission may continue the public hearing to other dates and times as it deems necessary. Any interested party shall be advised that the dates, times, and places of any continuation of these or continued public hearings shall be announced during the hearings and that no further notices regarding these matters will be published. You are advised that any person who desires to appeal any decision made during the public hearings will need a record of the proceedings and, for this purpose, may need to ensure that a verbatim record of the proceedings is made, which includes the testimony and evidence upon which the appeal is based. Persons with disabilities needing assistance to participate in any of the proceedings should contact the City Clerk's Office 48 hours in advance of the meeting at (407) 905-3105.

Melanie Sibbitt, City Clerk
1/07/2024 7560757

7560757

STAFF REPORT

Meeting Date: January 16, 2024
Item #: 14

Contact Name: Anoch Whitfield
Contact Number: Ext. 1016

Department Director: Michael Rumer
City Manager: Robert Frank

Subject: 16 Floral Street - Wright Property Variance - VR-23-03. (Zoning Manager Whitfield)

Background Summary:
The applicant, Ariana Wright, is requesting approval of one (1) variance from Section 5-14A and corresponding Table 5-2 as follows:

1) 17.7-foot (representing a 69%) reduction of the minimum front building setback from 25 feet to 7.7 feet along the west property line to accommodate an attached garage for a single-family home on a corner lot.

The subject property is located at 16 Floral Street in Commission District 2 and is zoned R-1A Single-Family Dwelling District. Per Table 5-2 of the Land Development Code (LDC), the minimum zoning regulations for development within the R-1A zoning district are as follows:

Lot Size	Front Setback	Side Setback	Rear Setback	Min Lot Width	Max Building Coverage	Maximum Impervious	Max Building Height	Minimum Living Area
8,000 SF	25 FT	7.5 F	25 FT	70 FT	40%	50%	35 FT	1,200 SF

The subject property is a corner lot with roadway right-of-way (ROW) frontage along the north (Floral Street) and west (South Cumberland Avenue). The primary entrance of the residence is along the north. Per Section 5-4G, Article V, LDC, "on a corner lot", the applicable front yard setback shall apply to both street frontages. Consequently, both the north and west property line are considered a front yard and, as such, are subject to the required front yard setback of 25 feet.

The existing house was built in 1974 with no garage or carport, and based on the submitted survey, the house is located approximately 7.7 feet from the west property line and 24.6 feet from the north property line. The home is served by a septic system, and according to the property owner, the drain field is generally in the "back middle yard" of the house. Furthermore, the house has a front porch but no back porch, and the back door is generally in the center of the rear elevation of the house. Thus, although the applicant originally wanted a detached garage, because of the limited space and drain field, the applicant seeks to build an attached garage that would align with the west elevation of the house in order to leave room for a back patio to shelter the back door from the weather.

According to Chapter 4-9 A., the variance application/applicant must demonstrate:

1. Special conditions and circumstances exist that are peculiar to the land, structures or required subdivision improvements involved and are not applicable to other lands, structures or required subdivision improvements;
2. That a literal interpretation of the provisions of these regulations would deprive the applicant of rights commonly enjoyed by other properties with similar conditions;
3. That the special conditions and circumstances do not result from the actions of the applicant; and
4. That the granting of the variance requested will not confer of the applicant any special privilege that is denied by these regulations to other lands, structures or required subdivision improvements under similar conditions.

Applicant Response: The applicant states that, because the house does not have a garage or carport, "this does not allow for security or protection from the elements". She further states that "a garage is common to all the other properties in her community with similar conditions ... a variance is required to keep the construction uniform with the rest of the homes in our area, as well as allowing for maintenance access to our septic system... this will increase the value of the property."

Staff Review: Given the location of the back door and drain field, staff finds that the proposed location of the garage and patio is the most suitable placement for these improvements and reflects the minimal variance needed. The proposed garage location maximizes the available space behind the house, maintains a single building elevation along Cumberland Avenue, leaves room for the back patio to shelter the back door and maintains access to the drain field. Placing the proposed garage at the 25-foot minimum front setback line would put the back door of the house in the center of the garage. Lastly, since the house is currently 24.6 feet from the north property line (primary entrance), placing the garage at the front of the house would place the garage almost entirely in the front yard setback and approximately 2.6 feet from the property line. The proposed improvements will not cause the lot to exceed the maximum 50% impervious surface area for the zoning district. The proposed location of the garage was based on coordination between staff and the applicant. Staff finds that the variance demonstrates satisfaction with the four (4) review criteria and supports the request.

Issue:

Should the City Commission approve a variance from Section 5-14A and corresponding Table 5-2, LDC, for a 17.7-foot reduction of the minimum front building setback from 25 feet to 7.7 feet (representing a 69% variance) along the west property line to accommodate an attached garage for a single family home located at 16 Floral Street, assigned parcel ID number 17-22-28-6144-03-631?

Recommendations:

Staff recommends that the City Commission approve the variance from Section 5-14A and corresponding Table 5-2, LDC, to allow a 17.7-foot reduction of the minimum front building setback from 25 feet to 7.7 feet (representing a 69% variance) along the west property line to accommodate an attached garage for the single family home located at 16 Floral Street, assigned parcel ID number 17-22-28-6144-03-631.

Attachments:

1. 16 Floral Location Map_v2
2. 16 Floral Aerial Map
3. 16 Floral Zoning Map
4. 16 Floral FLU Map
5. Application & Justification
6. 16 Floral Site Concept 100723

7. 24-003_AFD_Ad Wright Variance_Jan 16 24 CC Hearing

Financial Impacts:
N/A

Type of Item: Public Hearing

16 Floral St Variance
Location Map

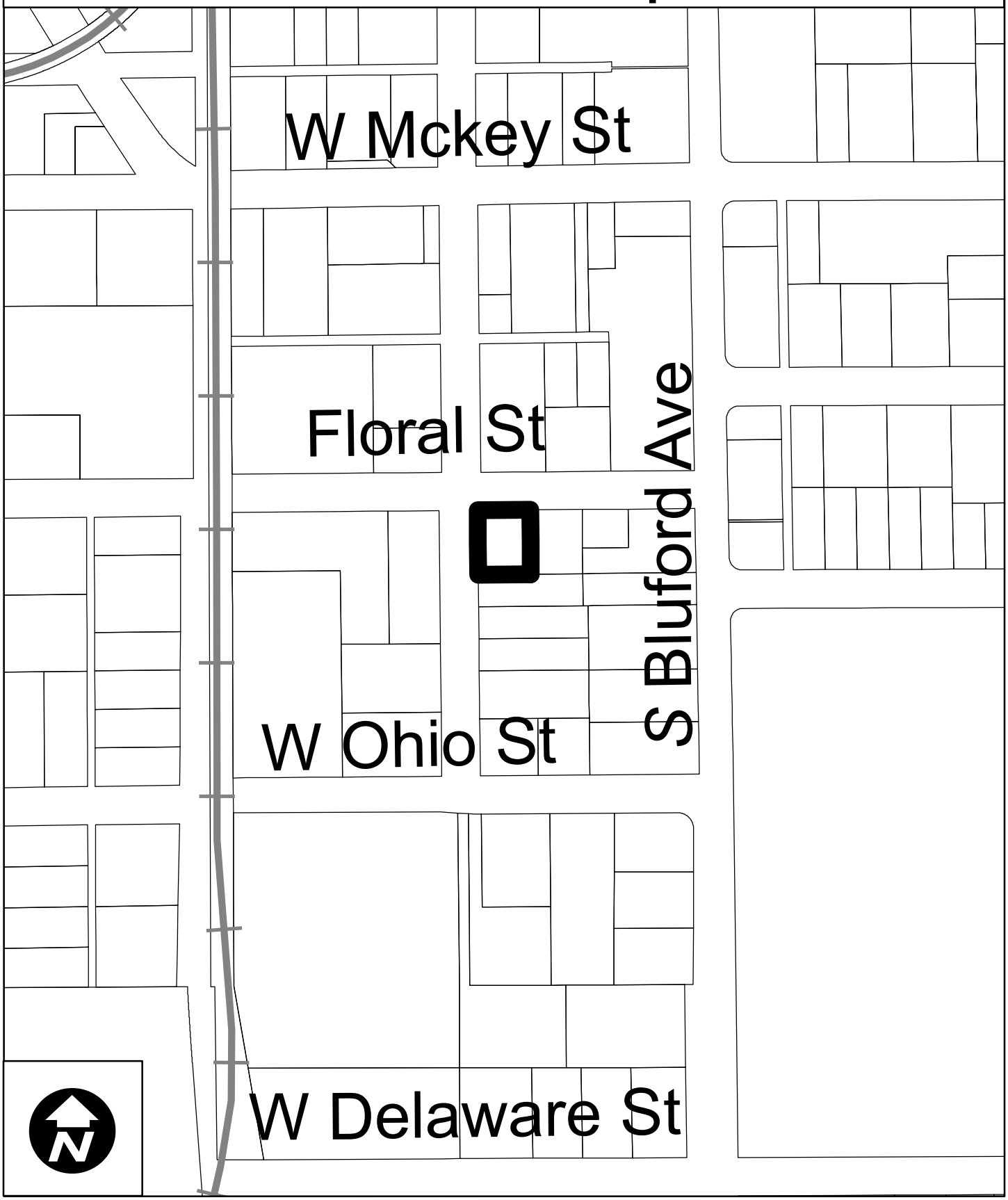

16 Floral St Variance
Aerial Map

16 Floral St Variance
Zoning Map

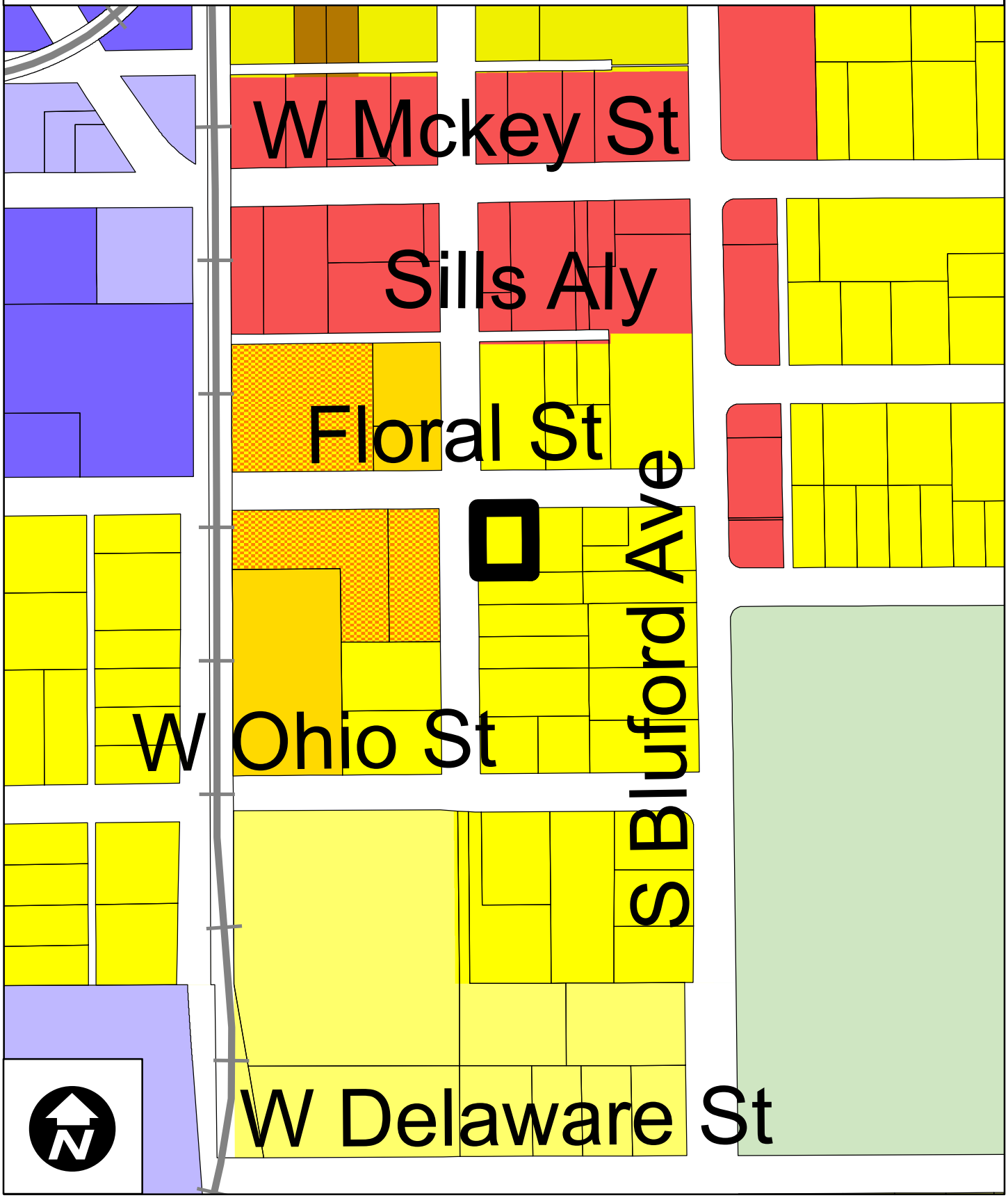

16 Floral St Variance
Future Land Use Map

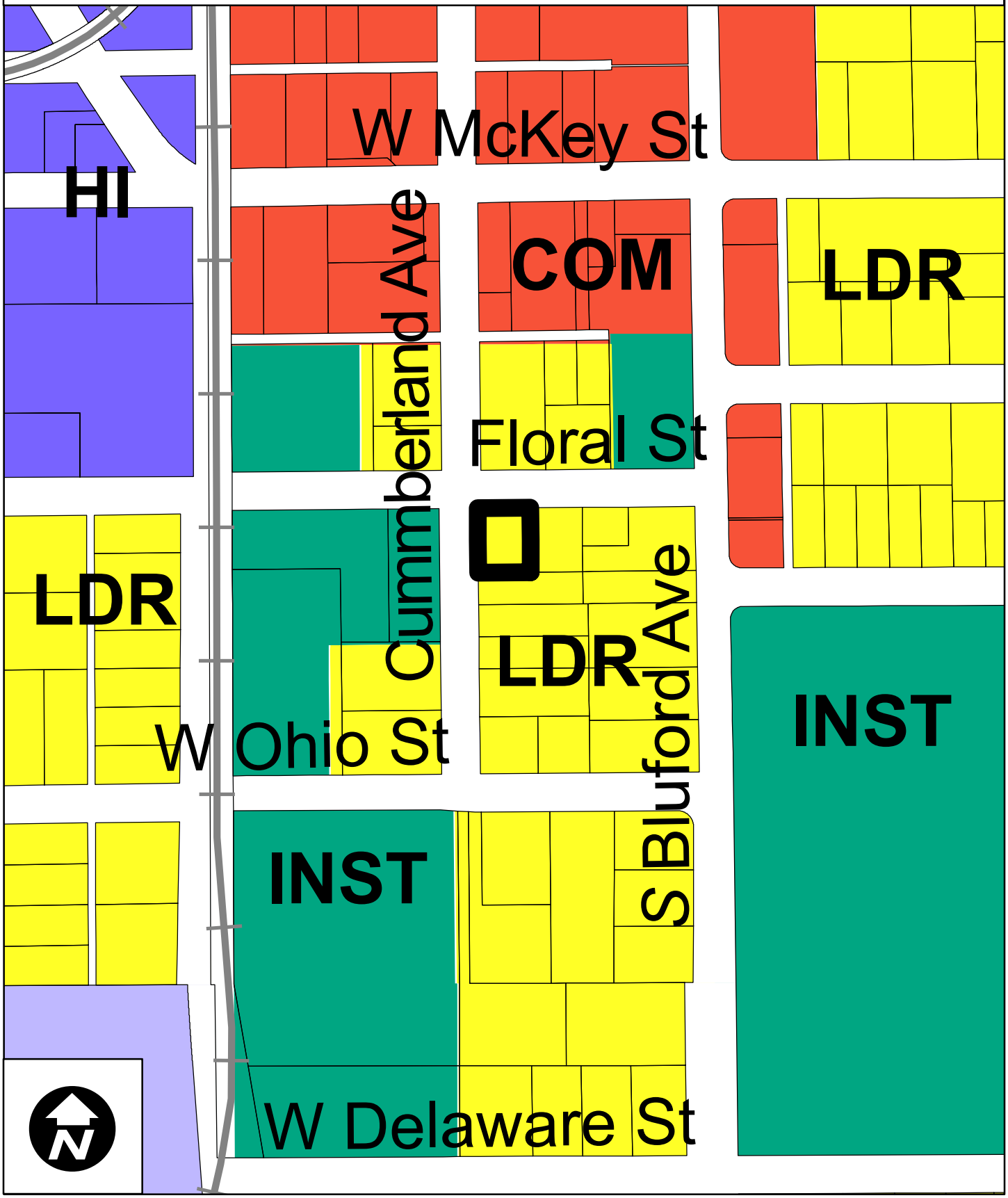

VARIANCE APPLICATION

Development Services – Planning Division
1 N. Bluford Avenue | Ocoee, FL 34761
Phone: 407.905.3157

Received Date – Office Use Only

PROJECT NUMBER: VR-23-03 DATE RECEIVED: 10-27-23

PROJECT NAME: _____

PROJECT DESCRIPTION: Build a Garage

APPLICANT'S NAME: Ariana Wright

APPLICANT'S ADDRESS: 16 Floral Street Ocoee FL, 34761

TELEPHONE NUMBER: 305-965-5955

E-MAIL ADDRESS: power.seanr@gmail.com

OWNER OF RECORD: Ariana Wright

OWNER'S ADDRESS: 16 Floral Street Ocoee FL, 34761

PHONE NUMBER: 305-965-5955

PROPERTY LOCATION: 16 Floral Street Ocoee FL, 34761

A. PROPERTY TAX ID. NO(S):

17-22-28-6144-03-631

- LEGAL DESCRIPTION: ALL APPLICATIONS FOR SUBDIVISION OR SITE PLAN REVIEW MUST PROVIDE THREE (3) EXECUTED, CERTIFIED AND SEALED BOUNDARY SURVEYS FOR THE SUBJECT PARCEL, WHICH SHALL INCLUDE A METES-AND-BOUNDS LEGAL DESCRIPTION. ATTACH SURVEY WITH FULL LEGAL DESCRIPTION AS EXHIBIT.

- PROPOSED USE OF THE SUBJECT PARCEL IF THE PRESENT APPLICATION(S) IS/ARE GRANTED? Build a Garage that attaches to the rear of the home, aligned with the home.

- NUMBER OF EXISTING BUILDINGS AND EXISTING LAND USE OF THE SUBJECT PARCEL:

1

- BRIEFLY ADDRESS THE FOLLOWING:

B. THE NEED AND JUSTIFICATION FOR THE REQUESTED ACTION: Our property does not have a garage or carport, this does not allow for security or protection from the elements. A garage is common to all of the other properties in our community with similar conditions. A variance is required to keep the construction uniform with the rest of the homes in our area, as well as allowing for maintenance access to our septic system. In addition, this will increase the value of the property.

- HOW WILL THE FOLLOWING ESSENTIAL SERVICES BE PROVIDED?

A. POTABLE WATER: No change

B. WASTEWATER TREATMENT: No change

C. STORMWATER MANAGEMENT: No change

D. RECREATION: No change

E. SCHOOLS AND PROJECTED NUMBER OF SCHOOL AGE CHILDREN: No change

F. MAIN HIGHWAY ACCESS (A traffic study may be required): No change

G. FIRE PROTECTION (NOTE: Fire flow data will be required before final platting):

No change

APPLICANT SIGNATURE 10/27/23 DATE

CITY OF OCOEE
OWNER'S AFFIDAVIT

STATE OF Florida

COUNTY OF Orange

Affiant, Ariana Wright, who being first duly sworn on oath, depose(s) and say(s):

1. Affiant is the *(check one)* ☑ fee-simple owner of the property legally described in this application.

   ☐ *(insert title)* _____ of *(insert name of company)* _____ which entity is the fee-simple owner of the property legally described in this application.
2. A true and correct legal description for the property is attached to and made a part of this affidavit.
3. The attached ownership list contains the names and mailing address of all owners having an interest in the property described in this application.
4. The owner desires garage construction _____ (specify action sought) for said property.
5. The owner has appointed (specify agent) _____ to act as the Owner's Authorized Agent to represent the Owner in connection with the proposed action and the real property described in this application.
6. The owner agrees to be bound by the actions of the Owner's Authorized Agent designated above.
7. Affiant affirms and certifies that Affiant, the owner's authorized agent and the will comply with all ordinances, regulations and provisions of the City Code of the City of Ocoee, and that all statements and diagrams submitted herewith are true and accurate to the best of their/his/her knowledge and belief and further, that this application and attachments shall become part of the official records of the City of Ocoee, and are not returnable.
8. That the accompanying adjacent property owners list is, to the best of their/her/his knowledge, a complete and accurate list of the owner's names and mailing addresses for all property lying within three hundred (300) feet of the perimeter of the subject parcel, as recorded on the latest official Orange County Tax Rolls.
9. That prior to the public hearing, if applicable, signs will be prominently posted on the subject parcel not less than seven (12) days before the application will be considered by the Planning and Zoning Board or the Board of Adjustment, and will remain posted until final determination, after which time the notices are to be removed and destroyed.

_____
Affiant's Signature

Sworn to or affirmed and signed by means of ☑ physical presence or □ online notarization on 10, 27 2023

Danielle Rowell

NOTARY PUBLIC
[Print, type, or stamp commissioned name of notary or clerk to the left of signature]

DANIELLE ROWELL
MY COMMISSION # HH 373628
EXPIRES: April 1, 2027

Affiant is □ personally known; or ☑ produced the following identification: FL Drivers License.

_____
Affiant's Signature

Sworn to or affirmed and signed by means of □ physical presence or □ online notarization on_____, __ 20__.

_____
NOTARY PUBLIC
[Print, type, or stamp commissioned name of notary or clerk to the left of signature]

Affiant is □ personally known; or □ produced the following identification: _____.

_____
Affiant's Signature

Sworn to or affirmed and signed by means of □ physical presence or □ online notarization on_____, __ 20__.

_____
NOTARY PUBLIC
[Print, type, or stamp commissioned name of notary or clerk to the left of signature]

Affiant is □ personally known; or □ produced the following identification: _____.

_____
Affiant's Signature

Sworn to or affirmed and signed by means of □ physical presence or □ online notarization on_____, __ 20__.

_____
NOTARY PUBLIC
[Print, type, or stamp commissioned name of notary or clerk to the left of signature]

Affiant is □ personally known; or □ produced the following identification: _____.

OWNERSHIP LIST

PARCEL ONE:

OWNER'S NAME: Ariana Wright

OWNERSHIP INTEREST: Garage Construction

MAILING ADDRESS: 16 Floral Street Ocoee FL, 34761

LEGAL DESCRIPTION:

Adding an addition to the home; building a garage that aligns with the house property line at the rear of the home. This allows for maintinance access for the septic system that is located in the back middle yard of the home.

PARCEL TWO:

OWNER'S NAME:

OWNERSHIP INTEREST:

MAILING ADDRESS:

LEGAL DESCRIPTION:

PARCEL THREE:

OWNER'S NAME: _____

OWNERSHIP INTEREST: _____

MAILING ADDRESS: _____

_____

LEGAL DESCRIPTION:

_____

_____

_____

_____

_____

_____

_____

*** NOTE: ATTACH ADDITIONAL SHEETS IF MORE THAN THREE PARCELS.**

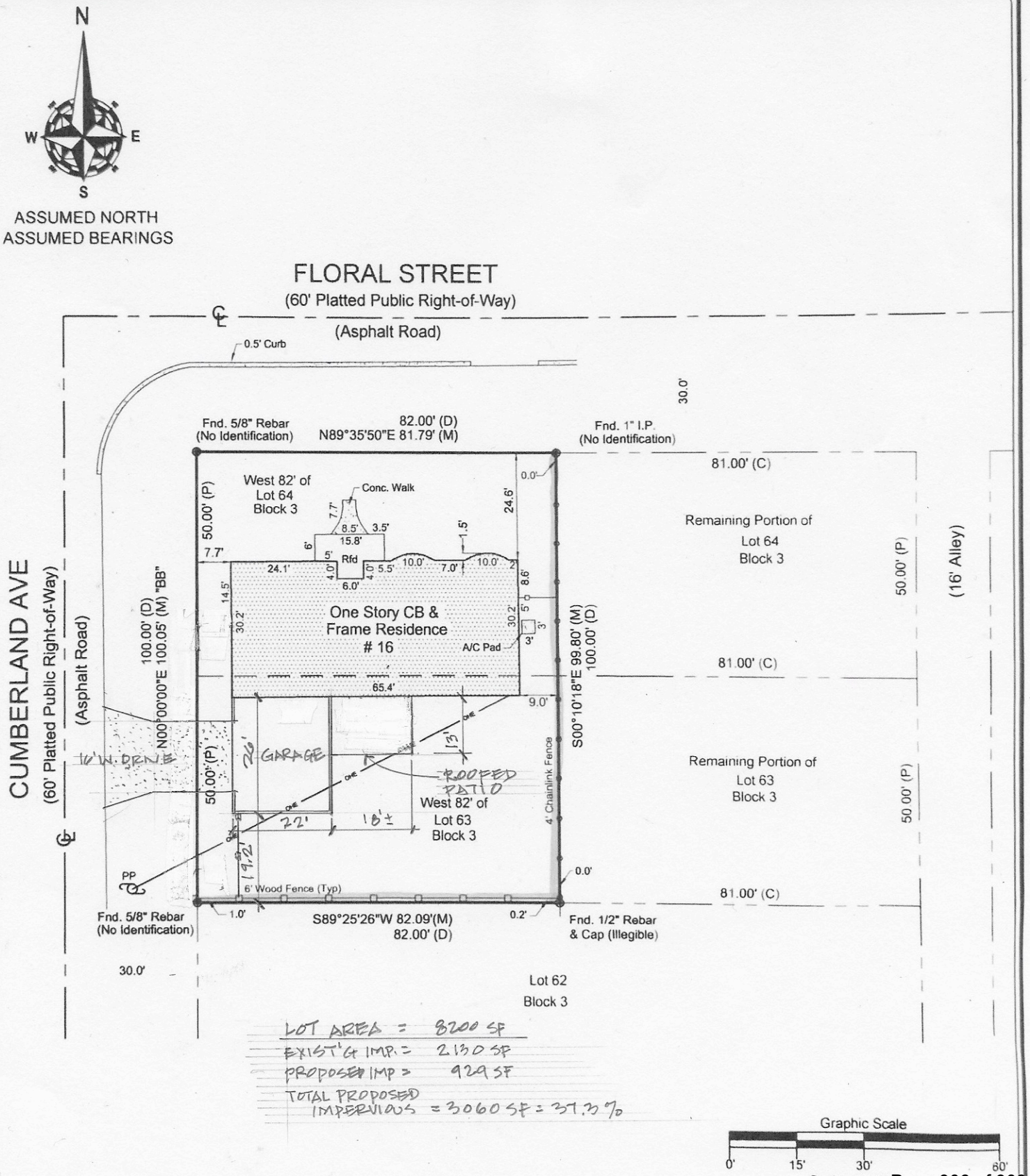
N
W
E
S
ASSUMED NORTH
ASSUMED BEARINGS
FLORAL STREET
(60' Platted Public Right-of-Way)
(Asphalt Road)
0.5' Curb
30.0'
Fnd. 5/8" Rebar
(No Identification)
82.00' (D)
N89°35'50"E 81.79' (M)
Fnd. 1" I.P.
(No Identification)
81.00' (C)
West 82' of
Lot 64
Block 3
Conc. Walk
Remaining Portion of
Lot 64
Block 3
50.00' (P)
(16' Alley)
CUMBERLAND AVE
(60' Platted Public Right-of-Way)
(Asphalt Road)
100.00' (D)
100.05' (M) "BB"
N00°00'00"E
One Story CB &
Frame Residence
16
A/C Pad
S00°10'18"E 99.80' (M)
100.00' (D)
81.00' (C)
16' W. DRIVE
GARAGE
ROOFED PATIO
Remaining Portion of
Lot 63
Block 3
50.00' (P)
West 82' of
Lot 63
Block 3
4' Chainlink Fence
PP
6' Wood Fence (Typ)
Fnd. 5/8" Rebar
(No Identification)
S89°25'26"W 82.09'(M)
82.00' (D)
Fnd. 1/2" Rebar
& Cap (Illegible)
30.0'
Lot 62
Block 3
LOT AREA = 8200 SF
EXIST'G IMP. = 2130 SF
PROPOSED IMP = 929 SF
TOTAL PROPOSED
IMPERVIOUS = 3060 SF = 37.3%
Graphic Scale
0'
15'
30'
60'
Scale: 1"=30'

Orlando Sentinel
MEDIA GROUP

Published Daily
ORANGE County, Florida

Sold To:
City of Ocoee - CU00104366
1 North Bluford Avenue
OCOEE, FL 34761-2258

Bill To:
City of Ocoee - CU00104366
1 North Bluford Avenue
OCOEE, FL 34761-2258

State Of Florida
County Of Orange

Before the undersigned authority personally appeared
Rose Williams, who on oath says that he or she is a duly authorized representative of the ORLANDO SENTINEL, a DAILY newspaper published in ORANGE County, Florida; that the attached copy of advertisement, being a Legal Notice in:

The matter of 11150-Public Hearing Notice
Was published in said newspaper by print in the issues of, or by publication on the newspaper's website, if authorized on Jan 07, 2024.

Affiant further says that the newspaper complies with all legal requirements for publication in Chapter 50, Florida Statutes.

Rose Williams

Signature of Affiant

Rose Williams

Name of Affiant

Sworn to and subscribed before me on this 8 day of January, 2024,
by above Affiant, who is personally known to me (X) or who has produced identification ( ).

LeAnne Rollins

Signature of Notary Public

LEANNE ROLLINS
Notary Public - State of Florida
Commission # GG 982233
My Comm. Expires Apr 27, 2024
Bonded through National Notary Assn.

Name of Notary, Typed, Printed, or Stamped

7560792

Orlando Sentinel
MEDIA GROUP

CITY OF OCOEE NOTICE OF PUBLIC HEARING
16 FLORAL STREET – WRIGHT PROPERTY
VARIANCE REQUEST CASE NUMBER: VR-23-03

NOTICE IS HEREBY GIVEN, that the OCOEE CITY COMMISSION will hold a PUBLIC HEARING on TUESDAY, JANUARY 16, 2024, at 6:15 P.M. or as soon thereafter as possible, at the Ocoee City Commission Chambers, 1 North Bluford Avenue, Ocoee, Florida, in order to consider the petition of Ariana Wright for a variance according to the provisions of Article IV, Subsection 4-9 of the City of Ocoee Land Development Code.

Action Requested: The property is located at 16 Floral Street and is assigned parcel ID # 17-22-28-6144-03-631. The applicant is requesting a variance to Section 5-14A and the corresponding Table 5-2 of Article V of the Land Development Code to encroach 17.3 feet into the minimum 25-foot front building setback, representing a 69% variance in order to construct a patio and a garage with a 7.7-foot front (west) setback that aligns with the existing west elevation of the house. As this is a corner lot where the front door/main entry of the house faces north of Floral Street, the proposed improvements are in the rear of the house and would face Cumberland Avenue.

Interested parties may appear at the public hearing and be heard with respect to the proposed action. The complete case file may be inspected at the Ocoee Development Services Department, located at 1 North Bluford Avenue, Ocoee, Florida, between the hours of 8:00 a.m. and 5:00 p.m., Monday through Friday, except for legal holidays. The City Commission may continue the public hearing to other dates and times as it deems necessary. Any interested party shall be advised that the dates, times, and places of any continuation of these or continued public hearings shall be announced during the hearings and that no further notices regarding these matters will be published. You are advised that any person who desires to appeal any decision made during the public hearings will need a record of the proceedings and, for this purpose, may need to ensure that a verbatim record of the proceedings is made, which includes the testimony and evidence upon which the appeal is based. Persons with disabilities needing assistance to participate in any of the proceedings should contact the City Clerk's Office 48 hours in advance of the meeting at (407) 905-3105.

Melanie Sibbitt, City Clerk
1/07/2024 7560792

7560792